EASA
European Aviation Safety Agency

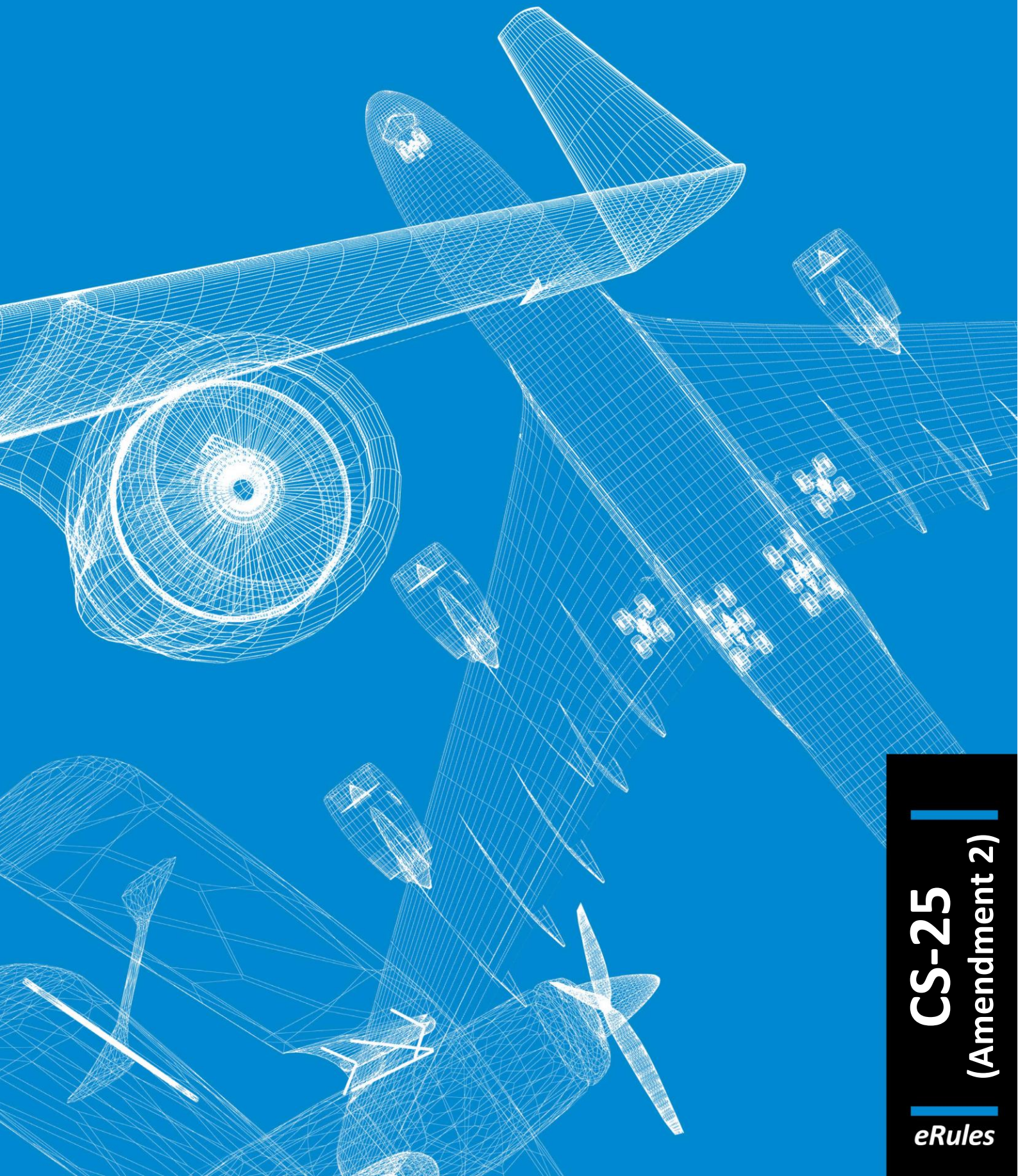

CS-25
(Amendment 2)

eRules

Easy Access Rules for large aeroplanes (CS-25) (Amentment 2)

EASA eRules: aviation rules for the 21st century

Rules and regulations are the core of the European Union civil aviation system. The aim of the **EASA eRules** project is to make them **accessible** in an efficient and reliable way to stakeholders.

EASA eRules will be a comprehensive, single system for the drafting, sharing and storing of rules. It will be the single source for all aviation safety rules applicable to European airspace users. It will offer easy (online) access to all rules and regulations as well as new and innovative applications such as rulemaking process automation, stakeholder consultation, cross-referencing, and comparison with ICAO and third countries' standards.

To achieve these ambitious objectives, the **EASA eRules** project is structured in ten modules to cover all aviation rules and innovative functionalities.

The **EASA eRules** system is developed and implemented in close cooperation with Member States and aviation industry to ensure that all its capabilities are relevant and effective.

Published January 2023[1]

[1] The published date represents the date when the consolidated version of the document was generated.

DISCLAIMER

This version is issued by the European Aviation Safety Agency (EASA) in order to provide its stakeholders with an updated and easy-to-read publication. It has been prepared by putting together the certification specifications with the related acceptable means of compliance. However, this is not an official publication and EASA accepts no liability for damage of any kind resulting from the risks inherent in the use of this document.

NOTE FROM THE EDITOR

The content of this document is arranged as follows: the certification specifications (CS) are followed by the related acceptable means of compliance (AMC) paragraph(s).

All elements (i.e. CS and AMC) are colour-coded and can be identified according to the illustration below. The EASA Executive Director (ED) decision through which the point or paragraph was introduced or last amended is indicated below the paragraph title(s) *in italics*.

Certification specification

ED decision

Acceptable means of compliance

ED decision

The format of this document has been adjusted to make it user-friendly and for reference purposes. Any comments should be sent to erules@easa.europa.eu.

INCORPORATED AMENDMENTS

CS/AMC (ED DECISIONS)

Incorporated ED Decision	CS/AMC Issue No, Amendment No	Applicability date
ED Decision 2003/2/RM	CS-25/ Initial issue	17/10/2003
ED Decision 2005/006/R	CS-25/ Amendment 1	12/12/2005
ED Decision 2006/005/R	CS-25/ Amendment 2	2/10/2006

Note: To access the official versions, please click on the hyperlinks provided above.

TABLE OF CONTENTS

PREAMBLE

ED Decision 2006/005/R

CS-25 Amendment 2

The following is a list of paragraphs affected by this amendment:

Subpart A	
AMC 25-11	Amended
AMC 25-13	Title corrected
AMC 25-19	Amended
Subpart B	
CS 25.101	Amended
Subpart C	
AMC 25.335(b)(2)	Amended
CS 25.399	Amended
AMC 25.415	Title corrected
AMC 25.491	Title corrected
AMC 25.571(a),(b) and (e)	Amended
Subpart D	
AMC 25.703	Amended
AMC 25.723	Title corrected
CS 25.735	Amended
AMC 25.735	Amended
CS 25.745	Amended
AMC 25.785(d)	Amended
Subpart F	
CS 25.1301(c)	Amended
AMC 25.1309	Amended
AMC 25.1322	Amended
CS 25.1365(a)	Amended
CS 25.1423	Amended
CS 25.1435(b)(2)	Amended
AMC 25.1435	Amended
AMC 25.1457	Amended
Subpart G	
AMC 25.1581 Appx 1	Amended
AMC 25.1583(k)	Amended (NPA 14/2004)
CS 25.1591	Replace entirely (NPA 14/2004)
AMC 25.1591	Created (NPA 14/2004)
Appendices	
Appendix F, Part II	Amended
Appendix J	Amended

ED Decision 2005/006/R

CS-25 Amendment 1

The following is a list of paragraphs affected by this amendment:

Subpart B	
CS 25.251 (a) and (b)	Amended (NPA 11/2004)
Subpart C	
CS 25.301(b)	Amended (NPA 02/2005)
AMC 25.301(b)	Amended (sub-paragraph (b) deleted) and renumbered as AMC No 1 to CS 25.301(b) (NPA 02/2005)
AMC No.2 to CS 25.301(b)	Created (NPA 02/2005)
CS 25.302	Created (NPA 11/2004)
CS 25.305	Amended by adding sub-paragraphs (e) and (f) ((NPA 11/2004))
CS 25.307	Amended (NPA 11/2004)
AMC 25.307	Replaced (NPA 11/2004)
CS 25.341	Amended (NPA 11/2004)
AMC 25.341	Amended (NPA 11/2004)
CS 25.343(b)(1)(ii)	Amended (NPA 11/2004)
CS 25.345(c)(2)	Amended (NPA 11/2004)
CS 25.371	Amended (NPA 11/2004)
CS 25.373 (a)	Amended (NPA 11/2004)
CS 25.391	Amended (NPA 11/2004)
CS 25.427	Amended by adding sub-paragraph (d) (NPA 11/2004)
Subpart D	
CS 25.613	Amended (NPA 11/2004)
AMC 25.613	Created (NPA 11/2004)
CS 25.621	Replaced (NPA 08/2004)
AMC 25.621	Created (NPA 08/2004)
AMC 25.621(c)	Created (NPA 08/2004)
AMC 25.621(c)(1)	Created (NPA 08/2004)
CS 25.629	Amended (NPA 11/2004)
AMC 25.629	Created (NPA 11/2004)
Subpart E	
CS 25.901(c)	Amended (NPA 13/2004)
AMC 25.901(c)	Created (NPA 13/2004)
CS 25.933 (a)(1)	Amended (NPA 13/2004)
AMC 25.933 (a)(1)	Created (NPA 13/2004)
CS 25.981	Replaced (NPA 10/2004)
AMC 25.981(a)	Created (NPA 10/2004)
AMC 25.981(c)	Created (NPA 10/2004)
CS 25.1141 (f)	Amended (NPA 13/2004)
CS 25.1189	Amended (NPA 13/2004)
AMC 25.1189	Created (NPA 13/2004)
Subpart F	
CS 25.1436(b)(7)	Amended to refer to Appendix K (NPA 11/2004)
Subpart G	
CS 25.1517	Amended (NPA 11/2004)

CS 25.1522	Deleted (NPA 10/2004)
CS 25.1583(b)(1)	Amended by removing reference to CS 25.1522 (NPA 10/2004)
Subpart J	
Subpart J	Replaced entirely (NPA 10/2004)
Existing AMC to subpart J	Deleted entirely (NPA 10/2004)
AMC 25J901(c)(2)	Created (NPA 10/2004)
AMC 25J901(c)(4)	Created (NPA 10/2004)
AMC 25J943	Created (NPA 10/2004)
AMC 25J955(a)(2)(iii)	Created (NPA 10/2004)
AMC 25J991	Created (NPA 10/2004)
AMC 25J1041	Created (NPA 10/2004)
AMC 25J1093(b)	Created (NPA 10/2004)
CS 25J1189	Amended by adding reference to AMC 25.1189 (NPA 13/2004)
AMC 25J1195(b)	Created (NPA 10/2004)
Appendices	
Appendix K	Replaced entirely (NPA 11/2004)
Appendix L	Old Appendix K renumbered (NPA 11/2004)

SUBPART A – GENERAL

CS 25.1 Applicability

ED Decision 2003/2/RM

(a) This Airworthiness Code is applicable to turbine powered Large Aeroplanes.

GENERAL AMCs

AMC 25-11 Electronic Display Systems

ED Decision 2006/005/R

Purpose

This Acceptable Means of Compliance (AMC) provides guidance for certification of cathode ray tube (CRT) based electronic display systems used for guidance, control, or decision-making by the pilots of transport category aeroplanes. Like all acceptable means of compliance, this document is not, in itself, mandatory and does not constitute a regulation. It is issued to provide guidance and to outline a method of compliance with the rules.

This AMC is similar to FAA Advisory Circular AC 25-11 dated 16 July 1987.

Scope

The material provided in this AMC consists of guidance related to pilot displays and specifications for CRTs in the cockpit of commercial transport aeroplanes. The content of the AMC is limited to statements of general certification considerations, including display function criticality and compliance considerations; colour, symbology, coding, clutter, dimensionality, and attention-getting requirements; display visual characteristics; failure modes; information display and formatting; specific integrated display and mode considerations, including maps, propulsion parameters, warning, advisory, check list procedures and status displays.

1 *BACKGROUND*

a. The initial certification of CRTs as primary flight instruments, both in Europe and the United States, was coincident with major airframe certifications. The prime airframe manufacturers invested extensive preliminary laboratory work to define the system architecture, software design, colours, symbols, formats, and types of information to be presented, and to prove that these resulting displays would provide an acceptable level of safety. The flight test programmes gave many hours exposure of the electronic display systems to company test pilots, Agency test pilots, and customer pilots. Certification of the displays came at the end of this process. Because of this pre-certification exposure, the Agency had a high degree of confidence that these displays were adequate for their intended function and safe to use in foreseeable normal and failed conditions.

b. The initial electronic display designs tended to copy the electromechanical display formats. As a result, pilots have evaluated the new displays using the electromechanical displays as a reference. As electronic display systems evolve, there is great potential for significant improvements in information interchange between the system (aeroplane) and the pilot. The Agency intends to allow a certification environment that will provide the greatest flexibility commensurate with safety.

2 *GLOSSARY OF ACRONYMS*

AC	Advisory Circular published by FAA
ADF	Automatic Direction Finder
ADI	Attitude Director Indicator
AFCS	Automatic Flight Control System
AFM	Aeroplane Flight Manual
AIR	Aerospace Information Report (SAE)
AMC	Acceptable Means of Compliance

ARP	Aerospace Recommended Practice (SAE)
AS	Aerospace Standard (SAE) CDI Course Deviation Indicator
CS	Certification Specification
DOT	Department of Transportation
EASA	European Aviation Safety Agency
ED	EUROCAE Document
EFIS	Electronic Flight Instrument System
EHSI	Electronic Horizontal Situation Indicator
EUROCAE	The European Organisation for Civil Aviation Equipment
FAA	Federal Aviation Administration
FAR	Federal Aviation Regulations
HSI	Horizontal Situation Indicator
ILS	Instrument Landing System
INS	Inertial Navigation System
MEL	Minimum Equipment List
PFD	Primary Flight Display
RNAV	Area Navigation
ROM	Read Only Memory
RTCA	Radio Technical Commission for Aeronautics
RTO	Rejected Take-off
SAE	Society of Automotive Engineers
STC	Supplemental Type Certificate
TSO	Technical Standard Order
VOR	Very High Frequency Omnirange Station

3 *RELATED REQUIREMENTS AND DOCUMENTS*

a. *Requirements*

Compliance with many paragraphs of CS-25 may be related to, or dependent on, cockpit displays, even though the regulations may not explicitly state display requirements. Some applicable paragraphs of CS-25 are listed below. The particular compliance method chosen for other regulations not listed here may also require their inclusion if CRT displays are used in the flight deck.

25.207	Stall warning.
25.672	Stability augmentation and automatic and power-operated systems.
25.677	Trim systems.
25.699	Lift and drag device indicator.
25.703	Take-off warning system.
25.729	Retracting mechanism.
25.771	Pilot compartment.
25.777	Cockpit controls.
25.783	Doors.
25.812	Emergency lighting.
25.841	Pressurised cabins.
25.857	Cargo compartment classification.
25.858	Cargo compartment fire detection systems.
25.859	Combustion heater fire protection.

25.863	Flammable fluid fire protection.
25.901	Powerplant installation.
25.903	Engines.
25.1019	Oil strainer or filter.
25.1141	Powerplant controls: general.
25.1165	Engine ignition systems.
25.1199	Extinguishing agent containers.
25.1203	Fire detector systems.
25.1301	Equipment: function and installation.
25.1303	Flight and navigation instruments.
25.1305	Powerplant instruments.
25.1309	Equipment, systems, and installations.
25.1321	Arrangement and visibility.
25.1322	Warning, caution, and advisory lights.
25.1323	Airspeed indicating system.
25.1326	Pitot heat indication systems.
25.1329	Automatic pilot system.
25.1331	Instruments using a power supply.
25.1333	Instrument systems.
25.1335	Flight director systems.
25.1337	Powerplant instruments.
25.1351	Electrical systems and equipment: general.
25.1353	Electrical equipment and installations.
25.1355	Distribution system.
25.1381	Instrument lights.
25.1383	Landing lights.
25.1431	Electronic equipment.
25.1435	Hydraulic systems.
25.1441	Oxygen equipment and supply.
25.1457	Cockpit voice recorders.
25.1459	Flight recorders.
25.1501	Operating limitations and information: general.
25.1523	Minimum flight crew.
25.1541	Markings and placards: general.
25.1543	Instrument markings: general.
25.1545	Airspeed limitation information.
25.1549	Powerplant and auxiliary power unit instruments.
25.1551	Oil quantity indicator.
25.1553	Fuel quantity indicator.
25.1555	Control markings.
25.1581	Aeroplane flight manual: general.
25.J1305	APU instruments

CS-AWO All Weather Operations (Subpart 2 Cat II Operations and Subpart 3 Cat III Operations)

Operational regulations relative to instrument and equipment requirements

b. *Advisory Circulars, AMCs*

AC 20-88A	Guidelines on the Marking of Aircraft Powerplant Instruments (Displays).
AMC 25.1309	System Design and Analysis.
AMC 25.1329	Automatic Pilot Systems Approval.
AC 90-45A	Approval of Area Navigation Systems for Use in the U.S. National Airspace System.
AMC 25.1322	Alerting Systems
AMC 20-115()	Recognition of EUROCAE ED-12()/RTCA DO-178()

c. *Technical Standard Orders*

ETSO-C113 Airborne Multipurpose Electronic Displays.

d. *Industry Documents*

(1) The following documents are available from the EUROCAE 11, rue Hamelin 75783, Paris Cedex 16, France:

ED14B/RTCA DO-160B	Environmental Conditions and Test Procedures for Airborne Equipment.
ED12()/RTCA DO-178()	Software Considerations in Airborne Systems and Equipment Certification, as recognized by AMC 20-115().
ED58	Minimum Operational Performance Specification for Airborne Area Navigation Equipment using Multi-sensor Inputs.

(2) The following documents are available from the Society of Automotive Engineers, Inc. (SAE), 400 Commonwealth Drive, Warrendale, PA. 15096, USA:

ARP 268F	Location and Actuation of Flight Deck Controls for Transport Aircraft.
AS 425B	Nomenclature and Abbreviations, Flight Deck Area.
ARP 4102-4	Flight Deck Alerting System.
ARP 926A	Fault/Failure Analysis Procedure.
ARP 1068B	Flight Deck Instrumentation, Display Criteria and Associated Controls for Transport Aircraft.
ARP 1093	Numeral, Letter and Symbol Dimensions for Aircraft Instrument Displays.
ARP 1161	Crew Station Lighting – Commercial Aircraft.
ARP 1834	Fault/Failure Analysis for Digital Systems and Equipment.
ARP 1874	Design Objectives for CRT Displays for Part 25 (Transport) Aircraft.
AS 8034	Minimum Performance Standards for Airborne Multipurpose Electronic Displays

(3) The following documents are presently in draft form:

ARP 1782	Photometric and Colormetric Measurement Procedures for Direct View CRT Display Systems.
ARP 4032	Human Integration Color Criteria and Standards.

NOTE: In the event of conflicting information, this AMC takes precedence as guidance for certification of transport category aeroplane installations.

e. *Research Reports.* The following documents are available through the National Technical Information Service, Springfield, Virginia 22161, USA:

DOT/FAA/RD-81/38. II	Aircraft Alerting Systems Standardization Study Volume II Aircraft Alerting Systems Design Guidelines.
DOT/FAA/PM-85-19	The Development and Evaluation of Color Systems for Airborne Applications.

4 *GENERAL CERTIFICATION CONSIDERATIONS*

Introductory Note: When Improbable means Extremely Remote the latter is used, otherwise it means Remote.

a. *Display Function Criticality.* The use of electronic displays allows designers to integrate systems to a much higher degree than was practical with previous aeroplane flight deck components. With this integration can come much greater simplicity of operation of the aeroplane through automation of navigation, thrust, aeroplane control, and the related display systems. Although normal operation of the aeroplane may become easier, failure state evaluation and the determination of criticality of display functions may become more complex. This determination should refer to the display function and include all causes that could affect the display of that function, not only the display equipment. 'Loss of display,' for example, means 'loss of capability to display'.

(1) Criticality of flight and navigation data displayed should be evaluated in accordance with the requirements in CS 25.1309 and 25.1333. AMC 25.1309 clarifies the meaning of these requirements and the types of analyses that are appropriate to show that systems meet them. AMC 25.1309 also provides criteria to correlate the depth of analyses required with the type of function the system performs (non-essential, essential or critical); however, a system may normally be performing nonessential or essential functions from the standpoint of required availability and have potential failure modes that could be more critical. In this case, a higher level of criticality applies. Pilot evaluation may be a necessary input in making the determination of criticality for electronic displays. AMC 25.1309 recommends that the flight test pilot –

(i) Determines the detectability of a failure condition,

(ii) Determines the required subsequent pilot actions, and

(iii) Determines if the necessary actions can be satisfactorily accomplished in a timely manner without exceptional pilot skill or strength.

(2) Software-based systems should have the computer software verified and validated in an acceptable manner. One acceptable means of compliance for the verification and validation of computer software is outlined in AMC 20-115()Recognition of EUROCAE ED-12()/RTCA DO-178(). Software documentation appropriate to the level to which the verification and validation of the computer software has been accomplished should be provided as noted in ED12A/DO178A.

(3) Past certification programs have resulted in the following determinations of display criticality. Unconventional aeroplane and display design may change these assessments. In the failure cases discussed below, hazardously misleading failures are, by definition, not associated with a suitable warning.

(i) *Attitude*. Display of attitude in the cockpit is a critical function. Loss of all attitude display, including standby attitude, is a critical failure and must be Extremely Improbable. Loss of primary attitude display for both pilots must be Improbable. Display of hazardously misleading roll or pitch attitude

simultaneously on the primary attitude displays for both pilots must be Extremely Improbable.

Display of dangerously incorrect roll or pitch attitude on any single primary attitude display, without a warning must be Extremely Remote.

(ii) *Airspeed*. Display of airspeed in the cockpit is a critical function. Loss of all airspeed display, including standby, must be assessed in accordance with CS 25.1333(b). * Loss of primary airspeed display for both pilots must be Improbable. Displaying hazardously misleading airspeed simultaneously on both pilots' displays, coupled with the loss of stall warning or overspeed warning functions, must be Extremely Improbable.

(iii) *Barometric Altitude*. Display of altitude in the cockpit is a critical function. Loss of all altitude display, including standby, must be assessed in accordance with CS 25.1333(b). * Loss of primary altitude display for both pilots must be Improbable. Displaying hazardously misleading altitude simultaneously on both pilots' displays must be Extremely Improbable.

* General interpretation is that it must be Extremely Remote.

(iv) *Vertical Speed.* Display of vertical speed in the cockpit is an essential function. Loss of vertical speed display to both pilots must be Improbable.

(v) *Rate-of-Turn Indication.* The rate-of-turn indication is a non-essential function and is not required if the requirements of paragraph 4a(3)(i) are met.

NOTE: Operational rules may require the installation of a rate-of-turn indicator.

(vi) *Slip/Skid Indication.* The slip/skid or sideslip indication is an essential function. Loss of this function to both pilots must be Improbable. Simultaneously misleading slip/skid or sideslip information to both pilots must be Improbable.

(vii) *Heading*. Display of stabilised heading in the cockpit is an essential function. Displaying hazardously misleading heading information on both pilots' primary displays must be Improbable. Loss of stabilised heading in the cockpit must be Improbable. Loss of all heading display must be assessed in accordance with CS 25.1333(b). *

* General Interpretation is that it must be Extremely Improbable.

(viii) *Navigation*. Display of navigation information (excluding heading, airspeed, and clock data) in the cockpit is an essential function. Loss of all navigation information must be Improbable. Displaying hazardously misleading navigational or positional information simultaneously on both pilots' displays must be Improbable.

NOTE: Because of a relationship between navigation capability and communicated navigation information, the following related requirements are included. Non-restorable loss of all navigation and communication functions must be Extremely Improbable. Loss of all communication functions must be Improbable.

Judgement of what is 'hazardously misleading' navigation information is clearly a difficult area. Failures, which could potentially fall in this category, need to be identified as early as possible. Nevertheless it is necessary that interpretation of what is 'hazardously misleading' be agreed with the

certification Agency and this may depend on the type of navigation system installed, (on board and ground installations) and the flight phase. In specific flight phases (e.g. approach or arrivals and departures) displaying hazardously misleading navigational or positional information simultaneously on both pilots' displays must be Extremely Remote. Previous certifications have shown that, in the traditional ATC environment, this level of safety has been achieved by simultaneous display of raw radio navigation data in addition to any multi-sensor computed data.

(ix) *Propulsion System Parameter Displays*

(A) The required powerplant instrument displays must be designed and installed so that the failure or malfunction of any system or component that affects the display or accuracy of any propulsion system parameter for one engine will not cause the permanent loss of display or adversely affect the accuracy of any parameter for the remaining engines.

(B) No single fault, failure, or malfunction, or probable combinations of failures, shall result in the permanent loss of display, or in the misleading display, of more than one propulsion unit parameter essential for safe operation of a single engine.

(C) Combinations of failures, which would result in the permanent loss of any single, required powerplant parameter displays for more than one engine must be Improbable.

(D) Combinations of failures, which would result in the hazardously misleading display of any parameter for more than one engine, must be Extremely Improbable.

NOTE: The parameters to be considered must be agreed by the Agency.

(E) No single fault, failure, or malfunction, or combinations of failures not shown to be Extremely Improbable, shall result in the permanent loss of all propulsion system displays.

(F) Required powerplant instruments that are not displayed continuously must be automatically displayed when any inhibited parameter exceeds an operating limit or threshold, including fuel tank low-fuel advisory or maximum imbalance limit, unless concurrent failure conditions are identified where crew attention to other system displays takes priority over the powerplant instruments for continued safe operation of the aeroplane. In each case, it must be established that failure to concurrently display the powerplant instruments does not jeopardise the safe operation of the aeroplane.

(G) Propulsion system parameters essential for determining the health and operational status of the engines and for taking appropriate corrective action, including engine restart, must be automatically displayed after the loss of normal electrical power.

(H) If individual fuel tank quantity information is not continuously displayed, there must be adequate automatic monitoring of the fuel system to alert the crew of both system malfunctions and abnormal fuel management.

(x) *Crew alerting display.* The reliability of the alerting display should be compatible with the safety objectives associated with the system function for which it provides an alert. Crew alerting of certain parameters may be an essential function. Where this is so, loss of crew alerting should be Improbable (see AMC 25.1322).

(xi) *Flight crew Procedures.* The display of hazardously misleading flight crew procedures caused by display system failure, malfunction, or mis-design must be Improbable.

(xii) *Weather Radar.* Display of weather radar in the cockpit is a nonessential function; however, presentation of hazardously misleading information must be Improbable.

NOTE: Operational rules may require the installation and functioning of weather radar.

b. *Compliance Considerations*

(1) *Human Factors.* Humans are very adaptable, but unfortunately for the display evaluation process, they adapt at varying rates with varying degrees of effectiveness and mental processing compensation. Thus, what some pilots might find acceptable and approvable, others would reject as being unusable and unsafe. Aeroplane displays must be effective when used by pilots who cover the entire spectrum of variability. Relying on a requirement of 'train to proficiency' may be unenforceable, economically impracticable, or unachievable by some pilots without excessive mental workload as compensation.

(i) The test programme should include sufficient flight and simulation time, using a representative population of pilots, to substantiate –

(A) Reasonable training times and learning curves;

(B) Usability in an operational environment;

(C) Acceptable interpretation error rates equivalent to or less than conventional displays;

(D) Proper integration with other equipment that uses electronic display functions;

(E) Acceptability of all failure modes not shown to be Extremely Improbable; and

(F) Compatibility with other displays and controls.

The manufacturers should provide human factors support for their decisions regarding new or unique features in a display. Evaluation pilots should verify that the data supports a conclusion that any new or unique features have no human factors traps or pitfalls, such as display perceptual or interpretative problems, for a representative pilot population.

(ii) It is desirable to have display evaluations conducted by more than one pilot, even for the certification of displays that do not incorporate significant new features. At least one member of the team should have previous experience with the display principles contained in this document. For display designs that incorporate unproven features, evaluation by a greater number of pilots

should be considered. To help the Agency certification team gain assurance of a sufficiently broad exposure base, the electronic display manufacturer or installer should develop a test programme with the Agency that gathers data from Agency test pilots, company test pilots, and customer pilots who will use the display. A reasonable amount of time for the pilot to adapt to a display feature can be allowed, but long adaptation times must receive careful consideration. Any attitude display format presented for Agency approval should be sufficiently natural in its design so that no training is required for basic manual aeroplane control.

(iii) For those electronic display systems that have been previously approved (including display formats) and are to be installed in aeroplanes in which these systems have not been previously approved, a routine Agency certification should be conducted. This programme should emphasise the systems' integration in the aeroplane, taking into account the operational aspects, which may require further detailed systems failure analysis (where 'system' means the display, driving electronics, sensors and sources of information).

(iv) Simulation is an invaluable tool for display evaluation. Acceptable simulation ranges from a rudimentary bench test set up, where the display elements are viewed statically, to full flight training simulation with motion, external visual scene, and entire aeroplane systems representation. For minor or simple changes to previously approved displays, one of these levels of simulation may be deemed adequate for display evaluation. For evaluation of display elements that relate directly to aeroplane control (i.e. air data, attitude, thrust set parameters, etc.), simulation should not be relied upon entirely. The dynamics of aeroplane motion, coupled with the many added distractions and sensory demands made upon the pilot that are attendant to actual aeroplane flight, have a profound effect on the pilot's perception and usability of displays. Display designers, as well as Agency test pilots, should be aware that display formats previously approved in simulation may well (and frequently do) turn out to be unacceptable in actual flight.

(2) *Hardware Installation*

(i) It is assumed that all display equipment has met the requirements set forth in SAE Document AS 8034 or guidance provided in ETSO-C113. Therefore, the purpose of the following guidance is to ensure compatibility of the flight-qualified equipment with the aeroplane environment. It is recognised that the validation of acceptable equipment installations considers the individual and combined effects of the following: temperature, altitude, electromagnetic interference, radiomagnetic interference, vibration, and other environmental influences. The installation requirements of CS-25 are applicable to critical, essential, and nonessential systems, and should be determined on a case-by-case basis by the Agency based on the specific circumstances.

(A) Analysis and testing shall be conducted to ensure proper operation of the display at the maximum unpressurised altitude for which the equipment is likely to be exposed.

(B) Electromagnetic interference analysis and testing shall be conducted to show –

(1) That the installed system is not susceptible to interference from other aeroplane systems, considering both interference of signal and power systems; and from external environment; and

(2) That the installed equipment does not affect other aeroplane systems.

(C) If improper operation of the display system can result from failures of the cooling function, then the cooling function must be addressed by analysis and test/demonstration.

(ii) Pilot-initiated pre-flight tests may be used to reduce failure exposure times associated with the safety analysis performed according to AMC 25.1309, sub-paragraph 9.b.(1). However, expecting an equipment pre-flight test to be conducted prior to each flight may not be conservative. If the flight crew is required to test a system prior to each flight, it should be assumed, for the safety analysis, that the flight crew will actually accomplish this test once per day, providing the pre-flight test is conveniently and acceptably implemented. An automatic-test feature designed to preclude the need for pilot initiated pre-flight tests may receive credit in the safety analysis.

5 *INFORMATION SEPARATION*

a. *Colour Standardisation*

(1) Although colour standardisation is desirable, during the initial certification of electronic displays colour standards for symbology were not imposed (except for cautions and warnings in CS 25.1322). At that time the expertise did not exist within industry or the Agency, nor did sufficient service experience exist, to rationally establish a suitable colour standard.

(2) In spite of the permissive CRT colour atmosphere that existed at the time of initial EFIS certification programmes, an analysis of the major certifications to date reveals many areas of common colour design philosophy; however, if left unrestricted, in several years there will be few remaining common areas of colour selection. If that is the case, information transfer problems may begin to occur that have significant safety implications. To preclude this, the following colours are being recommended based on current-day common usage. Deviations may be approved with acceptable justification.

(3) The following depicts acceptable display colours related to their functional meaning recommended for electronic display systems.

(i) Display features should be colour coded as follows:

Warnings	Red
Flight envelope and system limits	Red
Cautions, abnormal sources	Amber/Yellow
Earth	Tan/Brown
Engaged modes	Green
Sky	Cyan/Blue

ILS deviation pointer	Magenta
Flight director bar	Magenta/Green

(ii) Specified display features should be allocated colours from one of the following colour sets:

	Colour Set 1	Colour Set 2
Fixed reference symbols	White	Yellow*
Current data, values	White	Green
Armed modes	White	Cyan
Selected data, values	Green	Cyan
Selected heading	Magenta**	Cyan
Active route/flight plan	Magenta	White

* The extensive use of the colour yellow for other than caution/abnormal information is discouraged.

** In colour Set 1, magenta is intended to be associated with those analogue parameters that constitute 'fly to' or 'keep centred' type information.

(iii) Precipitation and turbulence areas should be coded as follows:

Precipitation	0 – 1	mm/hr	Black
	1 – 4	'	Green
	4 – 12	'	Amber/Yellow
	12 – 50	'	Red
	Above 50	'	Magenta
Turbulence			White or Magenta

(iv) Background colour: Background colour may be used (Grey or other shade) to enhance display presentation.

(4) When deviating from any of the above symbol colour assignments, the manufacturer should ensure that the chosen colour set is not susceptible to confusion or colour meaning transference problems due to dissimilarities with this standard. The Agency test pilot should be familiar with other systems in use and evaluate the system specifically for confusion in colour meanings. In addition, compatibility with electro-mechanical instruments should be considered.

(5) The Agency does not intend to limit electronic displays to the above colours, although they have been shown to work well. The colours available from a symbol generator/display unit combination should be carefully selected on the basis of their chrominance separation. Research studies indicate that regions of relatively high colour confusion exist between red and magenta, magenta and purple, cyan and green, and yellow and orange (amber). Colours should track with brightness so that chrominance and relative chrominance separation are maintained as much as possible over day/night operation. Requiring the flight crew to discriminate between shades of the same colour for symbol meaning in one display is not recommended.

(6) Chrominance uniformity should be in accordance with the guidance provided in SAE Document ARP 1874. As designs are finalised, the manufacturer should review his colour selections to ensure the presence of colour works to the advantage of separating logical electronic display functions or separation of types of displayed

data. Colour meanings should be consistent throughout all colour CRT displays in the cockpit. In the past, no criteria existed requiring similar colour schemes for left and right side installations using electro-mechanical instruments.

b. *Colour Perception vs. Workload*

(1) When colour displays are used, colours should be selected to minimise display interpretation workload. Symbol colouring should be related to the task or crew operation function. Improper colour coding increases response times for display item recognition and selection, and increases the likelihood of errors in situations where response rate demands exceed response accuracy demands. Colour assignments that differ from other displays in use, either electromechanical or electronic, or that differ from common usage (such as red, yellow, and green for stoplights), can potentially lead to confusion and information transferral problems.

(2) When symbology is configured such that symbol characterisation is not based on colour contrast alone, but on shape as well, then the colour information is seen to add a desirable degree of redundancy to the displayed information. There are conditions in which pilots whose vision is colour deficient can obtain waivers for medical qualifications under crew licence regulations. In addition, normal ageing of the eye can reduce the ability to sharply focus on red objects, or discriminate blue/green. For pilots with such deficiency, display interpretation workload may be unacceptably increased unless symbology is coded in more dimensions than colour alone. Each symbol that needs separation because of the criticality of its information content should be identified by at least two distinctive coding parameters (size, shape, colour, location, etc.).

(3) Colour diversity should be limited to as few colours as practical, to ensure adequate colour contrast between symbols. Colour grouping of symbols, annunciations, and flags should follow a logical scheme. The contribution of colour to information density should not make the display interpretation times so long that the pilot perceives a cluttered display.

c. *Standard Symbology.* Many elements of electronic display formats lend themselves to standardisation of symbology, which would shorten training and transition times when pilots change aeroplane types. At least one industry group (SAE) is working toward identifying these elements and proposing suitable standards. Future revisions of this AMC may incorporate the results of such industry efforts.

d. *Symbol Position*

(1) The position of a message or symbol within a display conveys meaning to the pilot. Without the consistent or repeatable location of a symbol in a specific area of the electronic display, interpretation errors and response times may increase. The following symbols and parameters should be position consistent:

(i) Autopilot and flight director modes of operation.

(ii) All warning/caution/advisory annunciation locations.

(iii) All sensor data: altitude, airspeed, glideslope, etc.

(iv) All sensor failure flags. (Where appropriate, flags should appear in the area where the data is normally placed.)

(v) Either the pointer or scale for analogue quantities should be fixed. (Moving scale indicators that have a fixed present value may have variable limit markings.)

(2) An evaluation of the positions of the different types of alerting messages and annunciations available within the electronic display should be conducted, with particular attention given to differentiation of normal and abnormal indications. There should be no tendency to misinterpret or fail to discern a symbol, alert, or annunciation, due to an abnormal indication being displayed in the position of a normal indication, and having similar shape, size or colour.

(3) Pilot and co-pilot displays may have minor differences in format, but all such differences should be evaluated specifically to ensure that no potential for interpretation error exists when pilots make cross-side display comparisons.

(4) If the display incorporates slow rate 'dithering' to reduce phosphor burn from stationary symbology, the entire display should be moved at a slow rate in order to not change the spatial relationships of the symbology collection as a whole.

e. *Clutter*. A cluttered display is one, which uses an excessive number and/or variety of symbols, colours, or small spatial relationships. This causes increased processing time for display interpretation. One of the goals of display format design is to convey information in a simple fashion in order to reduce display interpretation time. A related issue is the amount of information presented to the pilot. As this increases, tasks become more difficult as secondary information may detract from the interpretation of information necessary for the primary task. A second goal of display format design is to determine what information the pilot actually requires in order to perform the task at hand. This will serve to limit the amount of information that needs to be presented at any point in time. Addition of information by pilot selection may be desirable, particularly in the case of navigational displays, as long as the basic display modes remain uncluttered after pilot de-selection of secondary data. Automatic de-selection of data has been allowed in the past to enhance the pilot's performance in certain emergency conditions (de-selection of AFCS engaged mode annunciation and flight director in extreme attitudes).

f. *Interpretation of Two-Dimensional Displays.* Modern electro-mechanical attitude indicators are three-dimensional devices. Pointers overlay scales; the fixed aeroplane symbol overlays the flight director single cue bars which, in turn, overlay a moving background. The three-dimensional aspect of a display plays an important role in interpretation of instruments. Electronic flight instrument system displays represent an attempt to copy many aspects of conventional electromechanical displays, but in only two dimensions. This can present a serious problem in quick-glance interpretation, especially for attitude. For displays using conventional, discrete symbology, the horizon line, single cue flight director symbol, and fixed aeroplane reference should have sufficient conspicuity such that the quickglance interpretation should never be misleading for basic attitude. This conspicuity can be gained by ensuring that the outline of the fixed aeroplane symbol(s) always retains its distinctive shape, regardless of the background or position of the horizon line or pitch ladder. Colour contrast is helpful in defining distinctive display elements but is insufficient by itself because of the reduction of chrominance difference in high ambient light levels. The characteristics of the flight director symbol should not detract from the spatial relationship of the fixed aeroplane symbol(s) with the horizon. Careful attention should be given to the symbol priority (priority of displaying one symbol overlaying another symbol by editing out the secondary

symbol) to assure the conspicuity and ease of interpretation similar to that available in three-dimensional electro-mechanical displays.

NOTE: Horizon lines and pitch scales which overwrite the fixed aeroplane symbol or roll pointer have been found unacceptable in the past.

g. *Attention-Getting Requirements*

(1) Some electronic display functions are intended to alert the pilot to changes: navigation sensor status changes (VOR flag), computed data status changes (flight director flag or command cue removal), and flight control system normal mode changes (annunciator changes from armed to engaged) are a few examples. For the displayed information to be effective as an attention-getter, some easily noticeable change must be evident. A legend change by itself is inadequate to annunciate automatic or uncommanded mode changes. Colour changes may seem adequate in low light levels or during laboratory demonstrations but become much less effective at high ambient light levels. Motion is an excellent attention-getting device. Symbol shape changes are also effective, such as placing a box around freshly changed information. Short-term flashing symbols (approximately 10 seconds or flash until acknowledge) are effective attention-getters. A permanent or long-term flashing symbol that is non-cancellable should not be used.

(2) In some operations, continued operation with inoperative equipment is allowed (under provisions of an MEL). The display designer should consider the applicant's MEL desires, because in some cases a continuous strong alert may be too distracting for continued dispatch.

h. *Colour Drive Failure.* Following a single colour drive failure, the remaining symbology should not present misleading information, although the display does not have to be usable. If the failure is obvious, it may be assumed that the pilot will not be susceptible to misleading information due to partial loss of symbology. To make this assumption valid, special cautions may have to be included in the AFM procedures that point out to the pilot that important information formed from a single primary colour may be lost, such as red flags.

6 *DISPLAY VISUAL CHARACTERISTICS*

a. *Visual Display Characteristics.* The visual display characteristics of electronic displays should be in accordance with SAE Documents AS 8034, ARP 1874, and ARP 1068B. The manufacturer should notify the certification engineer of those characteristics that do not meet the guidelines contained in the referenced documents.

b. *Chromaticity and Luminance*

(1) Readability of the displays should be satisfactory in all operating and environmental lighting conditions expected in service. Four lighting conditions known to be critical for testing are –

(i) Direct sunlight on the display through a side cockpit window (usually short term with conventional window arrangements).

(ii) Sunlight through a front window illuminating white shirts, which are reflected in the CRT (a function for the CRT front plate filter).

(iii) Sun above the forward horizon and above a cloud deck in the pilot's eyes (usually a prolonged situation and the most critical of these four).

(iv) Night and/or dark environment. Brightness should be controllable to a dim enough setting such that outside vision is not impaired while maintaining an acceptable presentation.

(2) When displays are evaluated in these critical lighting situations, the display should be adjusted to a brightness level representative of that expected at the end of the CRT's normal useful life (5000 to 20000 hours), or adjusted to a brightness level selected by the manufacturer as the minimum acceptable output and measurable by some readily accomplished maintenance tests. If the former method is used, adequate evaluations should be performed to ensure that the expected end of life brightness levels are met. Some manufacturers have found, and the Agency has accepted, that 50% of original brightness level is a realistic end of life value. If the latter method is used, procedures should be established to require periodic inspections, and these limits should then become part of the service life limits of the aeroplane system.

(3) Large fields used in colour displays as background (e.g. blue sky and brown earth for attitude) for primary flight control symbols need not be easily discriminated in these high ambient light levels, provided the proper sense of the flight control information is conveyed with a quick glance.

(4) Electronic display systems should meet the luminance (photometric brightness) levels of SAE Document ARP 1874. A system designed to meet these standards should be readily visible in all the lighting conditions listed in paragraphs 6.b. (1) and 6.b. (2), and should not require specific flight testing for luminance if the system has been previously installed in another aeroplane with similar cockpit window arrangements. If the display evaluation team feels that some attributes are marginal under extreme lighting conditions, the following guidelines may be used:

(i) The symbols that convey quick-glance attitude and flight path control information (e.g., horizon line, pitch scale, fixed aeroplane symbol and/or flight path symbol, sky pointer and bank indices, flight director bars) should each have adequate brightness contrast with its respective background to allow it to be easily and clearly discernible.

(ii) The combination of colour and brightness of any subset of these symbols, which may, due to relative motion of a dynamic display, move adjacent to each other and use colour as an aid for symbol separation (e.g. flight director bars and fixed aeroplane symbol), should render each symbol distinctly identifiable in the worst case juxtaposition.

(iii) Flags and annunciations that may relate to events of a time critical nature (including warnings and cautions defined in paragraph 10. of this AMC as well as flight control system annunciations of mode reversions) should have a sufficient contrast with their background and immediate environment to achieve an adequate level of attensity (attention getting properties). Colour discrimination in high brightness ambient levels may not be necessary if the symbol remains unambiguous and clearly distinct from adjacent normal state or alphanumeric characters.

(iv) Analogue scale displays (heading, air data, engine data, CDIs, or course lines) should each have adequate brightness with its respective background to allow it to be easily and clearly discernible. Coloured warning and caution

markings on scales should retain colour discrimination. Symbols used as targets and present value pointers in juxtaposition to a scale should remain distinct. If colour is required to convey the meaning of similar shaped targets or indices, the colour should remain easily discernible.

(v) Flags and annunciations should still be visible at low display brightness when the display is adjusted to the lowest usable level for flight with normal symbology (day or night).

(vi) Raster fields conveying information such as weather radar displays should allow the raster to be independently adjustable in luminance from overlaid stroke symbology. The range of luminance control should allow detection of colour difference between adjacent small raster areas no larger than 5 milliradians in principal dimension; while at this setting, overlying map symbology, if present, should be discernible.

(5) Automatic brightness adjustment systems can be employed to decrease pilot workload and increase tube lifetime. Operation of these systems should be satisfactory over a wide range of ambient light conditions including the extreme cases of a forward low sun and a quartering rearward sun shining directly on the display. A measure of manual adjustment should be retained to provide for normal and abnormal operating differences. In the past it has been found that sensor location and field of view may as significant as the tube brightness dynamics. Glareshield geometry and window location should be considered in the evaluation.

c. *Other Characteristics*

The displays should provide characteristics which comply with the symbol alignment, linearity, jitter, convergence, focus, line width, symbol and character size, chrominance uniformity, and reflection criteria of SAE Documents ARP 1874 and AS 8034. Any features, which do not comply with these documents should be identified. The Agency test team should evaluate these characteristics during the initial certification of the displays as installed in the aeroplane with special attention to those display details which do not comply with the criteria of ARP 1874 and AS 8034. The test team will provide the determination of whether these characteristics of the display are satisfactory.

d. *Flicker*

Flicker is an undesired rapid temporal variation in display luminance of a symbol, group of symbols, or a luminous field. Flicker can cause mild fatigue and reduced crew efficiency. Since it is a subjective phenomena, the criteria cannot be ‘no flicker’; but because of the potential deleterious effects, the presence of flicker should not be perceptible day or night considering fovea and full peripheral vision and a format most susceptible to producing flicker. Refresh rate is a major determinant of flicker; related parameters are phosphor persistence and the method of generating mixed colours. Some systems will also slow down the screen refresh rate when the data content is increased (as in a map display with selectable data content). Frequencies above 55 Hz for stroke symbology or non-interlaced raster and 30/60 Hz for interlaced raster are generally satisfactory.

e. *Dynamics*

For those elements of the display that are normally in motion, any jitter, jerkiness, or ratcheting effect should neither be distracting nor objectionable. Screen data update rates for analogue symbols used in direct aeroplane or powerplant manual control tasks

(such as attitude, engine parameters, etc.) should be equal to or greater than 15 Hz. Any lag introduced by the display system should be consistent with the aeroplane control task associated with that parameter. In particular, display system lag (including the sensor) for attitude should not exceed a first order equivalent time constant of 100 milliseconds for aeroplanes with conventional control system response. Evaluation should be conducted in worst-case aerodynamic conditions with appropriate stability augmentation systems off in order to determine the acceptability of display lag.

Note: An update rate of 10 Hz for some engine parameters has been found acceptable on some aeroplanes.

7 INFORMATION DISPLAY

Display elements and symbology used in real-time 'tactical' aeroplane control should be natural, intuitive, and not dependent on training or adaptation for correct interpretation.

a. *Basic T*

The established basic T relationships of CS 25.1321 should be retained. Deviations from this rule, as by equivalent safety findings, cannot be granted without human factors substantiation based on wellfounded research or extensive service experience from military, foreign, or other sources.

(1) Deviations from the basic T that have been substantiated by satisfactory service experience and research are as follows:

(i) Airspeed and altitude instruments external to the attitude display drooped up to 15 degrees and elevated up to 10 degrees (when measured from the centre of the attitude fixed aeroplane reference to the centre of the air data instrument).

(ii) Vertical scale type radio altimeter indication between the attitude and altitude displays.

(iii) Vertical scale display of vertical speed between attitude and altitude displays.

(2) Airspeed and altitude within the electronic display should be arranged so that the present value of the displayed parameter is located as close as possible to a horizontal line extending from the centre of the attitude indicator. The present value of heading should be vertically underneath the centre of the attitude indicator; this does not preclude an additional heading display located horizontally from the attitude display.

(i) Moving scale air data displays should have their present value aligned with the centre of the attitude display fixed aeroplane reference.

(ii) A single fixed airspeed scale with a moving pointer would optimally have certain critical ranges where the present value (or pointer position) for those ranges is within 15 degrees of a horizontal line from the attitude display fixed aeroplane reference; e.g. take-off speeds (highly dynamic) and cruise speeds (long exposure). For aeroplanes with a large speed differential between take-off and cruise, the linear trade-off with speed resolution may preclude meeting this objective. In these cases, the manufacturer should prove that instrument scan, cross-check, and readability are acceptable for all expected normal and abnormal manoeuvres and applicable failure states of the aeroplane, including variability of the user pilot population.

(iii) Multiple range, fixed airspeed scales with moving pointers should be designed so that take-off and approach speed values are located within 15 degrees of a horizontal line through the attitude display fixed aeroplane reference symbol. The range switching point and hysteresis should be logically selected so that switching is unobtrusive and not detrimental to current speed tracking tasks or dynamic interpretation. Attributes of the individual scales must be such that there is no tendency for the pilot to lose the sense of context of speed range or misinterpret the displayed speed scale.

(3) In cases of adjacent air data instruments, such as a vertical scale airspeed inside an EADI and a conventional airspeed outside the EADI, the display closest to the primary attitude display will be considered the primary display, except in the case of supplementary displays where adequate human factors analysis and testing have been conducted to establish that the supplementary display does not decrease the level of safety from that provided by the primary display by itself (Example: fast/slow indicators).

(4) For retrofit of electronic displays into aeroplanes that previously exhibited variance from a basic T configuration, the electronic display installation should not increase this variance when considering the angle from the centre of the attitude reference to the centre of the airspeed and altimeter.

(5) The acceptability of a so-called 'cruise' mode in which the upper EADI and lower EHSI display formats may be transposed will be considered on a case-by-case basis by the Agency.

(6) Instrument landing system glideslope raw data display has been allowed on either side of the electronic display. If glideslope raw data is presented on both the EHSI and EADI, they should be on the same side. The Agency recommends a standard location of glideslope scales on the right side as specified in SAE Document ARP 1068B. If the scale or its location is multifunctional, then it should be labelled and contain some unambiguous symbolic attribute related to the indicator's function.

(7) Compliance with CS 25.1333 normally requires separate displays of standby attitude, air data, and heading. Since these displays are only used after a failure related to the primary instruments, the basic T arrangement requirements do not apply. However, all the standby instruments should be arranged to be easily usable by one of the pilots. CS 25.1321(a) requires a third (standby) instrument, where fitted, to be installed so that both pilots can use it. AMC 25.1321(a) allows that where an optimum position for both pilots is not possible, any bias should be in favour of the first pilot.

b. *Compacted Formats*

(1) The term 'compacted format', as used in this AMC, refers to a reversionary display mode where selected display components of a two-tube CRT display, such as EADI and EHSI, are combined in a single CRT to provide somewhat better capability in case of a single tube failure. The concepts and requirements of CS 25.1321, as discussed in paragraph 7.a., still apply; however, it has been found acceptable to allow a compacted mode on either the EADI or EHSI after failure of one CRT.

(2) The compacted display, out of necessity, will be quite different from the primary format. Flags, mode annunciations, scales, and pointers may have different locations and perhaps different logic governing when they appear. The flight test

evaluation should ensure the proper operation of all the electronic display functions in the compacted format, including annunciation of navigation and guidance modes if present. All the normal EFIS functions do not have to be present in the compacted mode; those that are present should operate properly. Flags and mode annunciations should, wherever possible, be displayed in a location common with the normal format. In all cases the attitude display should meet the characteristics of paragraph 7.e.

(3) If the remaining elements of the compacted upper display meet the characteristics of this document and the CS and operational regulations governing required instrumentation, then a note in the AFM stating that the compacted display is an airworthy mode would be acceptable in order to allow dispatch with a failed lower tube configuration.

c. *Test Functions*

The electronic display should incorporate a pilot selectable or automatic test mode that exercises the system to a depth appropriate to the system design. This function should be included even if the system failure analysis is not dependent on such a mode, or if display test is also a maintenance function. The test mode (or a submode) should display warning flags in their proper locations. Alerting and annunciation functions should be exercised, but it normally would not be necessary for the test to cycle through all possible annunciation states, or to display all flags and alerts. It has been found acceptable to incorporate the display test with a centralised cockpit light test switch, and to have the display test function disabled while airborne. The test mode provides a convenient means to display the software configuration.

Note: It is understood that a pilot selectable test needs to be provided, even if the system failure analysis is not dependent on such a mode to enable the pilot to become familiar with the various failure flags and annunciations which may appear. It is considered that such a requirement could also be satisfied by an appropriate system training facility off the aircraft.

d. *Primary Flight Displays*

(1) A side-by-side or over-under arrangement of large primary displays may integrate many air data, attitude, navigation, alerting, and annunciation functions, while removing their discrete instrument counterparts. For the initial approval of a new set of displays incorporating this arrangement, many of the evaluation concepts covered elsewhere in this AMC must be adhered to, particularly those relating to the use of colour and symbology for information separation (paragraph 5). The raw data aeroplane parameters necessary for manual control (attitude, airspeed, altitude, and heading) must still reside in a conventional basic T arrangement conducive to effective instrument crosscheck. This means that heading and attitude must be presented on the same display for a side-by-side CRT arrangement.

(2) *Scale Markings*

(i) Air data displays have a requirement similar to attitude in that they must be able to convey to the pilot a quick-glance sense of the present speed or altitude. Conventional round-dial moving pointer displays inherently give some of this sense that may be difficult to duplicate on moving scales. Scale length is one attribute related to this quick-glance capability. The minimum visible airspeed scale length found acceptable for moving scales on jet transports has been 80 knots; since this minimum is dependent on other

scale attributes and aeroplane operational speed range, variations from this should be verified for acceptability. Altimeters present special design problems in that –

(A) The ratio of total usable range to required resolution is a factor of 10 greater than for airspeed or attitude, and

(B) The consequences of losing sense of context of altitude can be catastrophic.

The combination of altimeter scale length and markings, therefore, should be adequate to allow sufficient resolution for precise manual altitude tracking in level flight, as well as enough scale length and markings to reinforce the pilot's sense of altitude and to allow sufficient look-ahead room to adequately predict and accomplish level-off. Addition of radio altimeter information on the scale so that it is visually related to ground position may be helpful in giving low altitude awareness. Airspeed scale markings that remain relatively fixed (such as stall warning, VMO/MMO), or that are configuration dependent (such as flap limits), are desirable in that they offer the pilot a quick-glance sense of speed. The markings should be predominant enough to confer the quick-glance sense information, but not so predominant as to be distracting when operating normally near those speeds (e.g. stabilised approach operating between stall warning and flap limit speeds).

(ii) Airspeed reference marks (bugs) on conventional airspeed indicators perform a useful function, and the implementation of them on electronic airspeed displays is encouraged. Computed airspeed/angle-of-attack reference marks (bugs) such as V_{stall}, V_{stall} warning, V_1, V_R, V_2, flap limit speeds, etc., displayed on the airspeed scale will be evaluated for accuracy. Provision should be incorporated for a reference mark that will reflect the current target airspeed of the flight guidance system. This has been required in the past for some systems that have complex speed selection algorithms, in order to give the pilot adequate information required by CS 25.1309(c) for system monitoring.

(iii) If any scale reference marks would not be available when equipment included on the MEL is inoperative, then the display should be evaluated for acceptability both with and without these reference marks.

(iv) Digital present value readouts or present value indices should not totally obscure the scale markings or graduations as they pass the present value index.

(v) Adjacent scale markings that have potential for interfering with each other (such as V_1, V_R, V_2 in close proximity) must be presented so that the intended reference values remain distinct and unambiguous.

(vi) At the present time, scale units marking for air data displays incorporated into PFDs are not required ('knots', 'airspeed' for airspeed, 'feet', 'altitude' for altimeters) as long as the content of the readout remains unambiguous. For altimeters with the capability to display in both Metric and British units, the scale and primary present value readout should remain scaled in British

units with no units marking required; the Metric display should consist of a separate present value readout that does include units marking.

(vii) Airspeed scale graduations found to be acceptable have been in 5-knot increments with graduations labelled at 20-knot intervals. If trend or acceleration cues are used, or a digital present value readout is incorporated, scale markings at 10-knot intervals have been found acceptable. Minimum altimeter graduations should be in 30 m (100-foot) increments with a present value readout, or 15 m (50-foot) increments with a present value index only. Due to operational requirements, it is expected that aeroplanes without either 20-foot scale graduations, or a readout of present value, will not be eligible for Category II low visibility operation with barometrically determined decision heights.

(3) Vertically oriented moving scale airspeed indication is acceptable with higher numbers at the top or bottom if no airspeed trend or acceleration cues are associated with the speed scale. Such cues should be oriented so that increasing energy or speed results in upward motion of the cue. To be consistent with this convention, airspeed scales with these cues should have the high-speed numbers at the top. Speed, altitude, or vertical rate trend indicators should have appropriate hysteresis and damping to be useful and non-distracting. Evaluation should include turbulence expected in service.

(4) The integration of many parameters into one upper display makes necessary an evaluation of the effect of failure (either misleading or total loss) of a display at the most critical time for the pilot. The sudden loss of multiple parameters can greatly impact the ability of the pilot to cope with immediate aeroplane control tasks in certain flight regimes such as during take-off rotation. If such failures are probable during the critical exposure time, the system must be evaluated for acceptability of data lost to the pilot. Automatic sensing and switching may have to be incorporated to preserve a display of attitude in one of the primary displays on the side with the failure.

e. *Attitude*

(1) An accurate, easy, quick-glance interpretation of attitude should be possible for all expected unusual attitude situations and command guidance display configurations. The pitch attitude display scaling should be such that during normal manoeuvres (such as take-off at high thrust-to-weight ratios) the horizon remains visible in the display with at least 2° pitch margin available. * In addition, extreme attitude symbology and automatically decluttering the EADI at extreme attitudes has been found acceptable (extreme attitude symbology should not be visible during normal manoeuvring). Surprise, unusual attitudes should be conducted in the aeroplane to confirm the quick-glance interpretation of attitude. The attitude display should be examined in 360° of roll and ± 90° of pitch. This can usually be accomplished by rotating the attitude source through the required gyrations with the aeroplane powered on the ground. When the aeroplane hardware does not allow this type of evaluation, accurate laboratory simulations must be used.

* See AMC 25.1303(b)(5) paragraph 1.6

(2) Both fixed aeroplane reference and fixed earth reference bank pointers ('sky' pointers) have been approved. A mix of these types in the same cockpit should not be approved.

f. *Digital, Analogue and Combinations*

The Agency has a long-standing policy of not accepting digital only displays of control parameters. The reason was the belief that only analogue data in the form of a pointer/scale relationship provided necessary rate, trend, and displacement information to the pilot. However, the Agency will evaluate new electronic display formats, which include digital-only or combinations of digital and analogue displays of air data, engine instruments, or navigation data. Digital information displays will be evaluated on the basis that they can be used to provide the same or better level of performance and pilot workload as analogue displays of the same parameters. Simulator studies can be valuable in providing experience with new display formats, but care must be taken to ensure that the simulator provides all the environmental cues germane to the parameter being evaluated.

g. *Knob Tactile Requirements*

(1) Control knobs used to set digital data on a display that have inadequate friction or tactile detents can result in undue concentration being required for a simple act such as setting an out-of-view heading bug to a CRT displayed number. Controls for this purpose should have an appropriate amount of feel to minimise this problem, as well as minimising the potential for inadvertent changes. The friction levels associated with standard resistive potentiometers have been shown in some cases to be inadequate.

(2) The display response to control input need not meet the dynamic requirements of paragraph 6.e., but should be fast enough to prevent undue concentration being required in setting values or display parameters. The sense of motion of controls should comply with the requirements of CS 25.777, where applicable.

h. *Full-Time vs. Part-Time Displays*

Some aeroplane parameters or status indications are required by the CS-25 and operational regulations to be displayed; yet they may only be necessary or required in certain phases of flight. If it is desired to inhibit some parameters from full-time display, an equivalent level of safety to full-time display must be demonstrated. Criteria to be considered include the following:

(1) Continuous display of the parameter is not required for safety of flight in all normal flight phases.

(2) The parameter is automatically displayed in flight phases where it is required.

(3) The inhibited parameter is automatically displayed when its value indicates an abnormal condition, or when the parameter reaches an abnormal value.

(4) Display of the inhibited parameter can be manually selected by the crew without interfering with the display of other required information.

(5) If the parameter fails to be displayed when required, the failure effect and compounding effects must meet the requirements of CS 25.1309.

(6) The automatic, or requested, display of the inhibited parameter should not create unacceptable clutter on the display; simultaneous multiple ‘pop-ups’ must be considered.

(7) If the presence of the new parameter is not sufficiently self-evident, suitable alerting must accompany the automatic presentation.

8 *SWITCHING AND ANNUNCIATION*

Switching and annunciation considerations made important by electronic displays are as follows:

a. *Power Bus Transients*

(1) The electronic attitude display should not be unusable or unstable for more than one second after the normally expected electrical bus transients due to engine failure, and should affect only displays on one side of the aeroplane. Recognisably valid pitch and roll data should be available within one second, and any effects lasting beyond one second should not interfere with the ability to obtain quick-glance attitude. For most aeroplanes an engine failure after take-off will simultaneously create a roll rate acceleration, new pitch attitude requirements, and an electrical transient. Attitude information is paramount; transfer to standby attitude or transfer of control of the aeroplane to the other pilot cannot be reliably accomplished under these conditions in a timely enough manner to prevent an unsafe condition. In testing this failure mode, experience has shown that switching the generator off at the control panel may not result in the largest electrical transient. During an engine failure, as the engine speed decays, the generator output voltage and frequency each decay to a point where the bus control finally recognises the failure. This can be a significantly larger disturbance resulting in a different effect on the using equipment. One practical way to simulate this failure is with a fuel cut. Other engine failure conditions may be more critical (such as sub-idle stalls) which cannot be reasonably evaluated in flight test. Analysis should identify these failure modes and show that the preceding criteria are met.

(2) The design objective should be displays that are insensitive to power transients; however, if the power transient is not related to a simultaneous aeroplane control problem, other failures which result in loss of displays on one side are not deemed as time critical, providing the switching concepts for multiple parameter displays are considered (paragraph 7.d.). Bus transients caused by normal load switching (hydraulic pump actuation, ovens, generator paralleling, etc.) should cause no visible effect on the display. Expected abnormal bus transients (i.e. generator failure not caused by engine failure) should not initiate a power up initialisation or cold start process.

(3) The large electrical loads required to restart some engine types should not affect more than one pilot's display.

b. *Reversionary Switching (Electronic Display Failure States)*

(1) The acceptability of a so-called 'cruise' mode in which the upper EADI and lower EHSI display formats may be transposed will be considered on a case-by-case basis by the Agency.

(2) In case of a symbol generator failure, both the pilot's and the co-pilot's displays may be driven from a single remaining symbol generator. When this switching state is invoked, there should be clear, cautionary alerting to both pilots that the displayed information is from a single source.

c. *Source Switching and Annunciation*

When the type or source of information presented on the primary flight instruments can change meaning with manual or automatic mode or source selection, then this mode or

source must be inherently unambiguous from the format of the display or from appropriate annunciation.

(1) Independent attitude, heading, and air data sources are required for the pilot and co-pilot primary displays. As long as independent sources are selected, there would ordinarily be no need for annunciation of these sources. If sources to the electronic displays can be switched in such a fashion that the flight crew becomes vulnerable to hazardously misleading information on both sides of the cockpit as a result of a common failure, then this switching configuration should be accomplished by a cautionary alert in clear view of both pilots.

(2) If the source of navigation information is not ambiguous, such as a case when VOR/ILS is not switchable across the cockpit, then no source annunciation would be required. Likewise, if a single navigation computer could only be responsible for the HSI navigation data, then this source need not be annunciated.

(3) If a crew member can select from multiple, similar, navigation sources, such as multiple VORs or multiple, long-range navigation systems, then the display of the selected source data into a CDI type presentation should be annunciated (i.e. VOR 1, INS 2, etc.). The annunciation should be implemented in such a fashion that a non-normal source selection is immediately apparent. In addition, when both crewmembers have selected the same navigation source, this condition should be annunciated; for example, the co-pilot has offside VOR selected, with VOR 1 annunciated in amber/yellow in the co-pilot's electronic display. Exceptions to this non-normal annunciation requirement can be constructed. If the similar navigation sources are two navigation computers that ensure position and stored route identically through a cross-talk channel, electronic display of normal or non-normal source annunciation would not be required provided a system disparity was annunciated. In the case where source annunciations are not provided on the electronic displays, such source annunciations should be readily obvious to the crew.

(4) The increased flexibility offered by modern avionics systems may cause flightcrews to be more susceptible to selecting an inappropriate navigation source during certain phases of flight, such as approach. Since electronic displays may incorporate more complex switching, compensating means should be provided to ensure that the proper navigation source has been selected. In order to reduce the potential for the pilot selecting a non-approach-qualified navigation source (such as INS) for an instrument approach, the Agency has approved the use of a discrete colour, in addition to labelling, for data from non-approach-qualified navigation sources when displayed on a CDI.

(5) If the primary heading display can be presented as true or grid heading or track –

(i) The electronic display should provide appropriate annunciation. Annunciation of magnetic heading is not normally required.

(ii) Either the display or heading source should provide a cautionary alert to the crew prior to entry into a terminal area with other than magnetic heading displayed. Examples of acceptable implementations include a simple alert when below 3048 m (10 000 feet) and in true heading mode, or a display alert generated by complex logic that detects the initiation of a descent from cruise altitude while still in true heading mode.

(6) There are situations where it may be desirable to have true heading displayed on the primary navigation display, and at the same time have VOR or ADF bearing pointers visible. All but a very small fraction of the VORs are referenced to Magnetic North; the electronic display should display the bearing pointer in such a fashion that it will point geometrically correct. If other display considerations permit, a separate readout of magnetic bearing to the VOR station would be desirable. If the electronic display cannot display this 'corrected' geometric bearing, then some display attribute should make it clear to the flight crew that the displayed geometry is not correct.

(7) Mode and source select annunciations on electronic displays should be compatible (this does not mean that the labels have to be identical, but that they are unambiguous in being able to identify them as the same function) with labels on source and mode select switches and buttons located elsewhere in the cockpit.

(8) If annunciation of automatic navigation system or flight control system mode switching is provided by the electronic display, selected modes should be clearly annunciated with some inherent attention-getting feature, such as a temporary box around the annunciation. Examples include vertical or lateral mode capture, release of capture, and autopilot or autothrottle mode change.

d. *Failures*

In the case of a detected failure of any parameter, the associated invalid indications should be removed and only the flag should be displayed. It is recommended that differentiation be made between the failure of a parameter and a 'no computed data' parameter, e.g. non-reception of radio navigation data.

9 *MAP MODE CONSIDERATIONS*

a. The map format should provide features recommended by SAE Document ARP 1068B.

Evaluation of maps or navigation displays overlaid with raster radar returns should ensure that all essential map or navigation display symbology remains readable and easily discriminated from the radar data.

b. When a route or course line can be presented in a map format, it should be demonstrated that the route can be flown manually and with autopilot in heading hold or control wheel steering modes (if applicable) with course errors compatible with those course errors defined as allowable in EUROCAE DOCUMENT ED 58. ED 58 discusses flight technical error and relates methods of accounting for piloting accuracy.

c. If instrument approaches are to be flown using a map format, previous certifications have included an AFM limitation requiring at least one pilot to monitor a raw data presentation. For ILS approaches, raw localiser and glide slope deviation presented in the ADI has been sufficient, and both navigation displays may remain in the map mode. For VOR approaches, a map course line may be used as the primary display for conducting the approach, providing the AFM limitations prescribe the allowable display mode configurations for proper raw data monitoring. Additional considerations include evaluation of crew time and task demands to configure the map/navigation computer for the approach. If it is desired to have both displays in the map mode for VOR approaches with no raw data monitoring, the accuracy and failure modes of the map display, navigation computer, and sensors must be shown to be compatible with the performance requirements and obstacle clearance zones associated with the type of approach being conducted.

d. When evaluating map failure modes, including failures induced by the symbol generator or the source navigation computer, consideration must be given to the compelling nature of a map display. It has been demonstrated that gross map position errors can go undetected or disbelieved because the flight crew falsely relied on the map instead of correct raw data. This characteristic of crew interpretation reinforces the need to adhere to the criteria of paragraph 4a(3)(viii), (which defines navigation as an essential function) when considering equipment and navigation source requirements.

10 *INTEGRATED WARNING, CAUTION AND ADVISORY DISPLAYS (See AMC 25.1322)*

a. A 'warning' should be generated when immediate recognition and corrective or compensatory action is required; the associated colour is red. A 'caution' should be generated when immediate crew awareness is required and subsequent crew action will be required; the associated colour is amber/yellow. An 'advisory' should be generated when crew awareness is required and subsequent crew action may be required; the associated colour should be unique, preferably not amber/yellow. Report No. DOT/FAA/RD-81-38, II, stresses the importance of preserving the integrity of caution and warning cues, including colour. Although electronic displays, when used as primary flight displays, are not intended to be classified as integrated caution and warning systems, they do generate warnings, cautions, and advisories that fall within the above definitions. Use of red, amber, or yellow for symbols not related to caution and warning functions is not prohibited but should be minimised to prevent diminishing the attention-getting characteristics of true warnings and cautions.

b. Caution and warning displays are necessarily related to aural alerts and master caution and warning attention-getting devices. If the electronic display provides caution and warning displays, previously independent systems may be integrated into one system where single faults potentially may result in the loss of more than one crew alerting function. Integrated systems have been found to be satisfactory if the features outlined below are provided –

(1) Visual and aural master caution attention-getting devices are activated whenever a caution message is displayed. Different visual and aural master warning devices are provided which activate whenever a warning is displayed.

(2) An aural alert audible to all flight crew members under all expected operating conditions is sounded when any conditions exist that require crew recognition of a problem and either immediate or future action. If the aural alert occurs because of the landing gear configuration warning, overspeed warning, take-off configuration warning, or ground proximity warning, the aural alert must sound continually while the conditions exist. The landing gear configuration warning may be automatically inhibited in those flight regimes where the warning is clearly unnecessary. Special means may be provided to cancel these aural warnings during selected non-normal procedures. If any one warning is cancelled, the remaining warnings must still be available. Other aural alerts may be cancelled by the flight crew. Certain alerts (either the aural portion or both aural and visual) may be inhibited in limited phases of flight, and enabled when that phase of flight is exited or terminated, provided the overall inhibition scheme increases safety. For example, systems have been approved that inhibit most alerts during (and immediately after) the take-off. The safety objective is to reduce the incidence of unnecessary high-speed rejected take-offs (RTO). Toward this end, the more effective type of system uses airspeed sensing to automatically begin the inhibit function. Systems requiring manual inhibition prior to initiation of take-off have been approved, but have the

undesirable effect of suppressing alerts that should properly instigate a low-speed RTO. Enabling of alerts should be automatic after an altitude gain appropriate to the type of aeroplane.

(3) A separate and distinct visual warning, caution, or advisory message is conspicuously displayed for each warning, caution, or advisory condition that the system is designed to recognise. The visual indication must be visible by all flight crew members under all expected lighting conditions. The colours of visual warning, caution, and advisory displays provided by this system must comply with CS 25.1322.

(4), (5) & (6) Reliability and Integrity (see AMC 25.1322, 8).

(7) The aural alerting is audible to the flight crew under worst-case ambient noise conditions, but not so loud and intrusive as to interfere with the crew taking the required action to ensure safe flight.

11 *CHECKLISTS OR PROCEDURAL ADVISORY DISPLAYS*

a. For purposes of the following discussion, checklist displays are divided into three types: those modifiable by the flight crew, those modifiable only on the ground by maintenance procedure, and those containing information 'hardwired' into the system or in ROM (unchangeable read-only-memory).

(1) *Data modifiable by the flight crew.* The responsibility for electronic checklist display contents rests with the flight crew. For those operations where the aeroplane is commonly flown by the same flight crew every day, this responsibility presents no burden on the pilots. At the other extreme, in an air carrier operation the pilots cannot be reasonably expected to review the contents of the checklist before their first flight of the day in that aeroplane. In order to implement this type of operation, the checklist format should allow for some means to easily determine the current status of the information; this means should be compatible with a practically implemented procedure that operationally controls who makes changes, and when and how that change level is identified on the display.

(2) *Data modifiable by maintenance procedure.* The display system should lend itself to a means for the flight crew to easily determine the change level of the checklist contents.

(3) *Data prepared by the manufacturer and contained in ROM.* It has been previously stated in the section on display criticality that the display of hazardously misleading flight crew procedures must be Improbable. This requirement applies not only to failure states of the display system, but also to changes to the aeroplane after display certification. While it is the responsibility of the manufacturer and the Agency to provide acceptable procedures to the operator, it is the responsibility of the operator to identify any checklist changes that may be made necessary by aeroplane modification. The display manufacturer should design the system so that revision status is easily identifiable by, and such that required changes can be made available to, the operator. An aeroplane change that made the electronic checklist incompatible with the required crew procedures in a manner that could be hazardously misleading would require the corresponding change to be made to the checklist or the display to be disabled entirely.

b. The wide variety of configurations and corresponding AFM supplements within a single model may establish a unique set of checklist procedures for each individual aeroplane.

Incorporation of STCs or other minor modifications could necessitate changes to the AFM, AFM supplements, or addition of new supplements. These changes would then require modifications to the electronically displayed checklists. At this stage of display development, it would seem advisable to limit displayed checklist information to that which can easily be changed or that which pertains only to the basic aeroplane. A hard copy of the AFM or approved operations manual and any checklists required by the operational rules must be available to the flight crew at all times.

c. Because misleading information in an emergency procedure could be hazardous, those elements of the display system responsible for the content of such procedures are deemed to be essential, and the display of wrong or misleading information must be Improbable. An analysis of the display system showing that such hazard is Improbable should be accomplished, the major concern being that incorrect procedures may be presented which could result in confusion in the cockpit. This analysis does not have to include the probability of the flight crew entering wrong information into a crew entry type of display.

d. Electronic checklists should be consistent in the level of detail among the various procedures. Checklist content that the crew may rely on for normal day-to-day procedures, but which is incomplete for abnormal or emergency procedures, may be unsatisfactory because of the extra time required for the crew to discover that the information required is missing and only obtainable from an alternate hard-copy checklist. Crew training, display response time, availability of display, and other cockpit cues are to be considered in evaluating the display system. If the system does not display all procedures required for safe operation of the aeroplane during normal and emergency conditions, testing is required to ensure that the proposed method for integrating an electronic checklist along with hard copy checklists does not decrease the level of safety in any foreseeable circumstance. If electronic checklists are installed, pilot workload should be no greater than that for using hard copy of the procedures.

12 *SYSTEM STATUS DISPLAYS*

If aeroplane systems status displays are provided, based on flight phase and system failure conditions, the symbols representing the system components should be logical, easily understood, and consistent between display formats. The colours used should be compatible with the requirements of paragraphs 5.a. and 5.b. of this AMC.

[Amdt 25/2]

AMC 25-13 Reduced And Derated Take-Off Thrust (Power) Procedures

ED Decision 2003/2/RM

1 *Purpose*

This acceptable means of compliance (AMC) provides guidance for the certification and use of reduced thrust (power) for take-off and derated take-off thrust (power) on turbine powered transport category aeroplanes. It consolidates CS guidance concerning this subject and serves as a ready reference for those involved with aeroplane certification and operation. These procedures should be considered during aeroplane type certification and supplemental type certification activities when less than engine rated take-off thrust (power) is used for take-off.

2 *Related Certification Specifications (CS)*

The applicable regulations are CS 25.101, 25.1521 and 25.1581.

3 *Background*

Take-off operations conducted at thrust (power) settings less than the maximum take-off thrust (power) available may provide substantial benefits in terms of engine reliability, maintenance, and operating costs. These take-off operations generally fall into two categories; those with a specific derated thrust (power) level, and those using the reduced thrust (power) concept, which provides a lower thrust (power) level that may vary for different take-off operations. Both methods can be approved for use, provided certain limitations are observed. The subjects discussed herein do not pertain to in-flight thrust cutback procedures that may be employed for noise abatement purposes.

4 *Definitions*

Customarily, the terms 'thrust' and 'power' are used, respectively, in reference to turbojet and turboprop installations. For simplicity, only the term 'thrust' is used throughout this AMC. For turboprop installations, the term 'power' should be substituted. For purposes of this AMC the following definitions apply:

a. Take-off Thrust

(1) Rated take-off thrust, for a turbojet engine, is the approved engine thrust, within the operating limits, including associated time limits, established by the engine type certificate for use during take-off operations.

(2) Take-off thrust, for an aeroplane, is normally the engine rated take-off thrust, corrected for any installation losses and effects that is established for the aeroplane under CS-25. Some aeroplanes use a take-off thrust setting that is defined at a level that is less than that based on the engine rated take-off thrust. CS 25.1521 requires that the take-off thrust rating established for the aeroplane must not exceed the take-off thrust rating limits established for the engine under the engine type certificate. The value of the take-off thrust setting parameter is presented in the Aeroplane Flight Manual (AFM) and is considered a normal take-off operating limit.

b. Derated take-off thrust, for an aeroplane, is a take-off thrust less than the maximum take-off thrust, for which exists in the AFM a set of separate and independent, or clearly distinguishable, take-off limitations and performance data that complies with all the take-off requirements of CS-25. When operating with a derated take-off thrust, the value of the thrust setting parameter, which establishes thrust for take-off, is presented in the AFM and is considered a normal take-off operating limit.

c. Reduced take-off thrust, for an aeroplane, is a take-off thrust less than the take-off (or derated take-off) thrust. The aeroplane take-off performance and thrust setting are established by approved simple methods, such as adjustments, or by corrections to the take-off or derated take-off thrust setting and performance. When operating with a reduced take-off thrust, the thrust setting parameter, which establishes thrust for take-off, is not considered a take-off operating limit.

d. A wet runway is one that is neither dry nor contaminated.

e. A contaminated runway is a runway where more than 25% of the required field length, within the width being used, is covered by standing water or slush more than 3·2 mm (0·125 inch) deep, or that has an accumulation of snow or ice. However, in certain other

situations it may be appropriate to consider the runway contaminated. For example, if the section of the runway surface that is covered with standing water or slush is located where rotation and lift-off will occur, or during the high speed part of the take-off roll, the retardation effect will be far more significant than if it were encountered early in the take-off while at low speed. In this situation, the runway might better be considered 'contaminated' rather than 'wet'.

5 *Reduced Thrust*: (Acceptable Means Of Compliance)

Under CS 25.101(c), 25.101(f), and 25.101(h), it is acceptable to establish and use a take-off thrust setting that is less than the take-off or derated take-off thrust if –

a. The reduced take-off thrust setting –

(1) Does not result in loss of systems or functions that are normally operative for take-off such as automatic spoilers, engine failure warning, configuration warning, systems dependent on engine bleed air, or any other required safety related system.

(2) Is based on an approved take-off thrust rating or derating for which complete aeroplane performance data is provided.

(3) Enables compliance with the applicable engine operating and aeroplane controllability requirements in the event that take-off thrust, or derated take-off thrust (if such is the performance basis), is applied at any point in the take-off path.

(4) Is at least 75% of the take-off thrust, or derated take-off thrust if such is the performance basis, for the existing ambient conditions, with no further reduction below 75% resulting from ARP credit.

(5) For turboprop installations, is predicated on an appropriate analysis of propeller efficiency variation at all applicable conditions and is limited to at least 75% take-off thrust.

(6) Enables compliance with CS-25 Appendix I in the event of an engine failure during take-off, for aeroplanes equipped with an Automatic Reserve Performance system.

b. Relevant speeds (V_{EF}, V_{MC}, V_R, and V_2) used for reduced thrust take-offs are not less than those which will comply with the required airworthiness controllability criteria when using the take-off thrust (or derated take-off thrust, if such is the performance basis) for the ambient conditions, including the effects of an Automatic Reserve Performance (ARP) system. It should be noted, as stated in paragraph c. below, that in determining the take-off weight limits, credit can be given for an operable ARP system.

c. The aeroplane complies with all applicable performance requirements, including the criteria in paragraphs a. and b. above, within the range of approved take-off weights, with the operating engines at the thrust available for the reduced thrust setting selected for take-off. However, the thrust settings used to show compliance with the take-off flight path requirements of CS 25.115 and the final take-off climb performance requirements of CS 25.121(c) should not be greater than that established by the initial thrust setting. In determining the take-off weight limits, credit can be given for an operable ARP system.

d. Appropriate limitations, procedures, and performance information are established and are included in the AFM. The reduced thrust procedures must ensure that there is no significant increase in cockpit workload, and no significant change to take-off procedures.

e. A periodic take-off demonstration is conducted using the aeroplane's take-off thrust setting without ARP, if fitted, and the event is logged in the aeroplane's permanent records. An approved engine maintenance procedure or an approved engine condition-monitoring programme may be used to extend the time interval between take-off demonstrations.

f. The AFM states, as a limitation, that take-offs utilising reduced take-off thrust settings –

(1) Are not authorised on runways contaminated with standing water, snow, slush, or ice, and are not authorised on wet runways unless suitable performance accountability is made for the increased stopping distance on the wet surface.

(2) Are not authorised where items affecting performance cause significant increase in crew workload.

Examples of these are –

Inoperative Equipment: Inoperative engine gauges, reversers, anti-skid systems or engine systems resulting in the need for additional performance corrections.

Engine Intermix: Mixed engine configurations resulting in an increase in the normal number of power setting values.

Non-standard operations: Any situation requiring a non-standard take-off technique.

(3) Are not authorised unless the operator establishes a means to verify the availability of take-off or derated take-off thrust to ensure that engine deterioration does not exceed authorised limits.

(4) Are authorised for aeroplanes equipped with an ARP System, whether operating or not.

g. The AFM states that –

(1) Application of reduced take-off thrust in service is always at the discretion of the pilot.

(2) When conducting a take-off using reduced take-off thrust, take-off thrust or derated take-off thrust if such is the performance basis may be selected at any time during the take-off operation.

h. Procedures for reliably determining and applying the value of the reduced take-off thrust setting and determining the associated required aeroplane performance are simple (such as the assumed temperature method). Additionally, the pilot is provided with information to enable him to obtain both the reduced take-off thrust and take-off thrust, or derated take-off thrust if such is the performance basis, for each ambient condition.

i. Training procedures are developed by the operator for the use of reduced take-off thrust.

6 *Derated Thrust* (Acceptable Means Of Compliance)

For approval of derated take-off thrust provisions, the limitations, procedures, and other information prescribed by CS 25.1581, as applicable for approval of a change in thrust, should be included as a separate Appendix in the AFM. The AFM limitations section should indicate that when operating with derated thrust, the thrust setting parameter should be considered a take-off operating limit. However, in-flight take-off thrust (based on the maximum take-off thrust specified in the basic AFM) may be used in showing compliance with the landing and approach climb requirements of CS 25.119 and 25.121(d), provided that the availability of take-

off thrust upon demand is confirmed by using the thrust-verification checks specified in paragraph 5.e. above.

[Amdt 25/2]

AMC 25-19 Certification Maintenance Requirements

ED Decision 2006/005/R

Requirements

1 *PURPOSE*

This AMC is similar to FAA Advisory Circular AC 25–19 dated 28 November 1994.

This Acceptable Means of Compliance (AMC) provides guidance on the selection, documentation and control of Certification Maintenance Requirements (CMRs). For those aeroplanes whose initial maintenance programme is developed under the Maintenance Review Board (MRB) process, this document also provides a rational basis for coordinating the Maintenance Review Board (MRB) and CMR selection processes in order to minimise the impact of CMRs on aeroplane operators. It is recognised that, for those aeroplanes whose initial maintenance programme is developed under a different process, the coordination and documentation aspects have to be adapted to the particular case. Like all acceptable means of compliance, this AMC is not, in itself, mandatory, and does not constitute a requirement. It is issued to describe an acceptable means, but not the only means, for selecting, documenting and managing CMRs. Terms such as 'shall' and 'must' are used only in the sense of ensuring applicability of this particular method of compliance when the acceptable method of compliance described herein is used.

2 *APPLICABLE CERTIFICATION SPECIFICATIONS*

CS 25.1309 and CS 25.1529 of the Certification Specifications (CS).

3 *RELATED DOCUMENTS*

a. AC 25.1309–1A, System Design and Analysis.

b. Acceptable Means of Compliance AMC 25.1309, System Design and Analysis.

c. AC 121–22A, Maintenance Review Board (MRB) Procedures.

d. ATA Maintenance Steering Group (MSG–3), Airline/Manufacturer Maintenance Program Development Document, available from the Air Transport Association of America, 1301 Pennsylvania Avenue – Suite 1100, Washington, DC 20004–1707.

e. AC 120–17A, Maintenance Program Management through Reliability Methods.

4 *BACKGROUND*

CMRs have been in use since the early 1970's, when the industry began using quantitative approaches to certify systems to the requirements of CS 25.1309 and other requirements requiring safety analyses. CMRs have been established on several aeroplanes certified in Europe and in other countries, and are being planned for use on aeroplanes currently under development.

5 *CMR DEFINITION*

A CMR is a required periodic task, established during the design certification of the aeroplane as an operating limitation of the type certificate. CMRs are a subset of the tasks identified during the type certification process. CMRs usually result from a formal, numerical analysis conducted

to show compliance with Catastrophic and Hazardous Failure Conditions as defined in paragraph 6b, below. There are two types of CMRs, as defined in paragraph 12 of this AMC.

a. A CMR is intended to detect safety-significant latent failures which would, in combination with one or more other specific failures or events, result in a Hazardous or Catastrophic Failure Condition.

b. It is important to note that CMRs are derived from a fundamentally different analysis process than the maintenance tasks and intervals which result from Maintenance Steering Group (MSG–3) analysis associated with Maintenance Review Board (MRB) activities. MSG–3 analysis activity produces maintenance tasks which are performed for safety, operational, or economic reasons, involving both preventative maintenance tasks, which are performed before failure occurs (and are intended to prevent failures), as well as failure-finding tasks. CMRs, on the other hand, are failure-finding tasks only, and exist solely to limit the exposure to otherwise hidden failures. Although CMR tasks are failure-finding tasks, use of potential failure-finding tasks, such as functional checks and inspections, may also be appropriate.

c. CMRs are designed to verify that a certain failure has or has not occurred, and do not provide any preventative maintenance function. CMRs 'restart the failure clock to zero' for latent failures by verifying that the item has not failed, or cause repair if it has failed. Because the exposure time to a latent failure is a key element in the calculations used in a safety analysis performed to show compliance with CS 25.1309, limiting the exposure time will have a significant effect on the resultant overall failure probability of the system. The CMR task interval should be designated in terms of flight hours, cycles, or calendar time, as appropriate.

d. The type certification process assumes that the aeroplane will be maintained in a condition or airworthiness at least equal to its certified or properly altered condition. The process described in this AMC is not intended to establish normal maintenance tasks that should be defined through the MSG–3 analysis process. Also, this process is not intended to establish CMRs for the purpose of providing supplemental margins of safety for concerns arising late in the type design approval process. Such concerns should be resolved by appropriate means, which are unlikely to include CMRs not established via normal safety analyses.

e. CMRs should not be confused with required structural inspection programmes, which are developed by the type certificate applicant to meet the inspection requirements for damage tolerance, as required by CS 25.571 or CS 25.1529, Appendix H25.4 (Airworthiness Limitations section). CMRs are to be developed and administered separately from any structural inspection programmes.

6 *OTHER DEFINITIONS*

The following terms apply to the system design and analysis requirements of CS 25.1309(b) and (c), and the guidance material provided in this AMC. For a complete definition of these terms, refer to the applicable requirements and guidance material, (i.e. AC 25.1309–1A and/or the EASA Acceptable Means of Compliance AMC 25.1309-1). AC 25.1309–1A and AMC 25.1309-1 are periodically revised by the FAA/EASA and are the controlling documents for definition of these terms. The terms listed below are derived from this guidance material and are included to assist in the use of this document.

a. *Failure*

A loss of function, or a malfunction, of a system or a part thereof.

b. *Failure Condition*

The effect on the aeroplane and its occupants, both direct and consequential, caused or contributed to by one or more failures, considering relevant adverse operational or environmental conditions. Failure Conditions may be classified according to their severities as follows:

(1) *Minor Failure Conditions*: Failure Conditions which would not significantly reduce aeroplane safety, and which involve crew actions that are well within their capabilities. Minor Failure Conditions may include, for example, a slight reduction in safety margins or functional capabilities, a slight increase in crew workload, such as routine flight plan changes, or some inconvenience to occupants.

(2) *Major Failure Conditions*: Failure Conditions which would reduce the capability of the aeroplane or the ability of the crew to cope with adverse operating conditions to the extent that there would be, for example, a significant reduction in safety margins or functional capabilities, a significant increase in crew workload or in conditions impairing crew efficiency, or discomfort to occupants, possibly including injuries.

(3) *Hazardous Failure Conditions*: Failure Conditions, which would reduce the capability of the aeroplane or the ability of the crew to cope with adverse operating, conditions to the extent that there would be:

(i) A large reduction in safety margins or functional capabilities;

(ii) physical distress or higher workload such that the flight crew cannot be relied upon to perform their tasks accurately or completely, or

(iii) serious or fatal injury to a relatively small number of the occupants.

(4) *Catastrophic Failure Conditions*: Failure Conditions, which would prevent the continued safe flight and landing of the aeroplane.

(c) *Probability Terms*

When using qualitative or quantitative assessments to determine compliance with CS 25.1309(b), the following descriptions of the probability terms used in the requirement and in the acceptable means of compliance listed above have become commonly accepted aids to engineering judgment:

(1) *Probable Failure Conditions*: Probable Failure Conditions are those anticipated to occur one or more times during the entire operational life of each aeroplane. Probable Failure Conditions are those having a probability of the order of 1×10^{-5} or greater. Minor Failure Conditions may be probable.

(2) *Improbable Failure Conditions*: Improbable Failure Conditions are divided into two categories as follows:

(i) *Remote*: Unlikely to occur to each aeroplane during its total life but may occur several times when considering the total operational life of a number of aeroplanes of the same type. Improbable (Remote) Failure Conditions are those having a probability of the order of 1×10^{-5} or less, but greater than of the order of 1×10^{-7}. Major Failure Conditions must be no more frequent than Improbable (Remote).

(ii) *Extremely Remote*. Unlikely to occur when considering the total operational life of all aeroplanes of the same type, but nevertheless has to be considered

as being possible. Improbable (Extremely Remote) Failure Conditions are those having a probability of the order of 1 x 10^{-7} or less, but greater than of the order of 1 x 10^{-9}. Hazardous Failure Conditions must be no more frequent than Improbable (Extremely Remote).

(3) *Extremely Improbable Failure Conditions*: Extremely Improbable Failure Conditions are those so unlikely that they are not anticipated to occur during the entire operational life of all aeroplanes of one type, and have a probability of the order of 1 x 10^{-9} or less. Catastrophic Failure Conditions must be shown to be Extremely Improbable.

d. *Qualitative*

Those analytical processes that assess system and aeroplane safety in a subjective, non-numerical manner, based on experienced engineering judgement.

e. *Quantitative*

Those analytical processes that apply mathematical methods to assess system and aeroplane safety.

7 *SYSTEM SAFETY ASSESSMENTS (SSA)*

CS 25.1309(b) provides general requirements for a logical and acceptable inverse relationship between the probability and severity of each Failure Condition, and AMC 25.1309, sub-paragraph 9 b.(1) specifies that compliance should be shown primarily by analysis. In recent years there has been an increase in the degree of system complexity and integration, and in the number of safety-critical functions performed by systems. This increase in complexity has led to the use of structured means for showing compliance with the requirements of CS 25.1309.

a. CS 25.1309(b) specify required safety levels in qualitative terms, and AMC 25.1309, sub-paragraph 9 b.(1) specifies that a safety assessment should be made. Various assessment techniques have been developed to assist applicants and the Agency in determining that a logical and acceptable inverse relationship exists between the probability and the severity of each Failure Condition. These techniques include the use of service experience data of similar, previously approved systems, and thorough qualitative analyses.

b. In addition, difficulties have been experienced in assessing the acceptability of some designs, especially those of systems, or parts of systems, that are complex, that have a high degree of integration, that use new technology, or that perform safety-critical functions. These difficulties led to the selective use of rational analyses to estimate quantitative probabilities, and the development of related criteria based on historical data of accidents and hazardous incidents caused or contributed to by failures. These criteria, expressed as numerical probability ranges associated with the terms used in CS 25.1309(b), became commonly accepted for evaluating the quantitative analyses that are often used in such cases to support experienced engineering and operational judgment and to supplement qualitative analyses and tests.

NOTE: See Acceptable Means of Compliance 25.1309, System Design and Analysis, for a complete description of the inverse relationship between the probability and severity of Failure Conditions, and the various methods of showing compliance with CS 25.1309.

8 *DESIGN CONSIDERATIONS RELATED TO CANDIDATE CMRs*

A decision to create a candidate CMR should follow the guidelines given in AMC 25.1309 (i.e. the use of candidate CMRs in lieu of practical and reliable failure monitoring and warning systems to detect significant latent failures when they occur does not comply with

CS 25.1309(c). A practical failure monitoring and warning system is one, which is considered to be within the state of the art. A reliable failure monitoring and warning system is one, which would not result in either excessive failures of a genuine warning, or excessive or untimely false warnings, which can sometimes be more hazardous than lack of provision for, or failures of, genuine but infrequent warnings. Experienced judgement should be applied when determining whether or not a failure monitoring and warning system would be practical and reliable. Comparison with similar, previously approved systems is sometimes helpful. Appendix 1 outlines some design considerations that should be observed in any decision to create a candidate CMR.

9 *IDENTIFICATION OF CANDIDATE CMRs (CCMRs)*

a. Figure 1 illustrates the relationship between the certification process and the MRB process in establishing scheduled maintenance tasks. Those tasks related to the certification process, as well as those derived through MSG–3 analysis, must be identified and documented as illustrated. The details of the process to be followed in defining, documenting, and handling CMRs are given in paragraphs 9b through 12 below.

b. *Candidate CMRs*

(1) Tasks that are candidates for selection as CMRs usually come from safety analyses (e.g. System Safety Assessments (SSA), which may establish the need for tasks to be carried out periodically to comply with CS 25.1309 and other requirements requiring this type of analysis). Tasks may be selected from those intended to detect latent failures, which would, in combination with one or more specific failures or events, lead to a Hazardous or Catastrophic Failure Condition.

(2) Other tasks, not derived from formal safety analyses but based on properly justified engineering judgement, may also be candidates for CMRs. The justification must include the logic leading to identification as a candidate CMR, and the data and experience base supporting the logic.

10 *CERTIFICATION MAINTENANCE COORDINATION COMMITTEE (CMCC)*

a. In order to grant operators of the aeroplane an opportunity to participate in the selection of CMRs and to assess the candidate CMRs and the proposed MRB tasks and intervals in an integrated process, the type certificate (TC) applicant should convene a Certification Maintenance Coordination Committee (CMCC) (see Figure 1). This committee should be made up of manufacturers, operator representatives designated by the Industry Steering Committee (ISC) Chairperson, Agency Certification Specialist(s) and the MRB Chairperson.

b. As early as possible in the design phase of the aeroplane programme, and at intervals as necessary, the CMCC should meet to review candidate CMRs, their purpose, criticality, and other relevant factors. During the CMCC's discussions, participants' experience may suggest alternatives to a given CMR, which would satisfy the intent of the CMR, while allowing reduced operational impact. In addition, where multiple tasks result from a quantitative analysis, it may be possible to extend a given interval at the expense of one or more other intervals, in order to optimise the required maintenance activity. However, if a decision is made to create a CMR, then the CMR task interval shall be based solely on the results of the safety analysis.

c. The CMCC would function as an advisory committee for the TC applicant. The results of the CMCC (proposed CMRs to be included on the type design definition and proposed revisions to MRB tasks and/or intervals) would be forwarded by the TC applicant to the ISC for their consideration. Revisions to proposed MRB tasks and/or intervals accepted

by the ISC will be reflected in the MRB report proposal. Revisions to proposed MRB tasks and/or intervals rejected by the ISC will result in CMR tasks. Subsequent to the ISC's consideration, the TC applicant will submit the CMR document, as defined in paragraph 12 of this AMC, to the Agency for final review and approval.

11 *SELECTION OF CMRs*

a. The candidate CMRs should be reviewed by the CMCC and a determination made as to whether or not CMR status is necessary and, if so, whether to categorise the CMR as One Star or Two Star, as defined in paragraph 12 of this AMC. To reach this decision, the following should be considered by the CMCC:

(1) CMR status does not need to be applied if the CCMR is satisfied by:

(i) Maintenance actions considered to be routine maintenance activity (and which are also identified as MRB tasks) based on engineering judgement and experience on similar aeroplane types, or

(ii) Tasks included in the approved Aeroplane Flight Manual.

(2) CMRs remaining after application of paragraph 11a(1) should be categorised as either One Star or Two Star CMRs. The following should be considered in assigning One Star or Two Star status:

(i) The degree of conservatism taken in the classification of the Failure Condition consequences.

(ii) The degree of conservatism taken in the individual failure rates and event occurrence rates used.

(iii) The margin between safety analysis calculated maximum interval and the interval selected through the MRB process.

(iv) The sensitivity of the Failure Condition probability to interval escalation.

(v) The proximity of the calculated maximum interval to the aeroplane life.

b. For operators with approved escalation practices or an approved reliability programme, data collection and analytical techniques are used to make adjustments to an operator's maintenance programme. It has been demonstrated that the management of a maintenance programme does not give rise to undue escalations. Therefore, escalation of Two Star CMR task intervals within an operator's maintenance programme ensures that Two Star CMRs will be properly managed by the operator with adequate controls.

12 *DOCUMENTATION AND HANDLING OF CMRs*

CMRs should be listed in a separate CMR document, which is referenced in the Type Certificate Data Sheet. The latest version of the CMR document should be controlled by a EASA-approved log of pages. In this way, changes to CMRs following certification will not require an amendment to the Type Certificate Data Sheet. The CMR document should clearly identify the two types of CMR tasks, which are handled as follows:

a. One Star CMRs (*) – The tasks and intervals specified are mandatory and cannot be changed, escalated, or deleted without the approval of the Agency.

b. Two Star CMRs (**) – Task intervals may be adjusted in accordance with an operator's approved escalation practices or an approved reliability programme, but the task may not be changed or deleted without prior Agency approval.

c. All minimum initial scheduled maintenance tasks, and CMRs, should reside in an MRB report to ensure that the operator's maintenance planning personnel are aware of all requirements. The CMR document should be included as Appendix 1 or A (the first appendix) to the MRB report. The MRB report should include a note indicating that the CMR document is the controlling document for all CMR tasks. When a CMR task corresponds to an MRB task, whatever the respective intervals, this fact should be highlighted, for example, by flagging the task in the CMR appendix of the MRB report.

d. Since CMRs are based on statistical averages and reliability rates, an exceptional short-term extension for a single CMR interval may be made on one aeroplane for a specific period of time without jeopardising safety. Any extensions to CMR intervals (both one star and two star) must be defined and fully explained in the CMR document. The local authority must be notified as soon as practicable if any short-term extension allowed by the CMR document has taken place.

(1) The term 'exceptional short-term extension' is defined as an increase in a CMR interval which may be needed to cover an uncontrollable or unexpected situation. Any allowable increase must be defined either as a percent of the normal interval, or a stated number of flight hours, flight cycles, or calendar days. If no short-term extension is to be allowed for a given CMR, this restriction should be stated in the CMR document.

(2) Repeated use of extensions, either on the same aeroplane or on similar aeroplanes in an operator's fleet, should not be used as a substitute for good management practices. Short-term extensions must not be used for fleet CMR escalation.

(3) The CMR document should state that the Agency must approve, prior to its use, any desired extension not explicitly listed in the CMR document.

13 *POST-CERTIFICATION CHANGES TO CMRs*

Any post-certification changes to CMRs should be reviewed by the CMCC, and must be approved by the Agency, which approved the type design.

a. Since the purpose of a CMR is to limit the exposure time to a given significant latent failure as part of an engineering analysis of overall system reliability, instances of a CMR task repeatedly finding that no failure has occurred may not be sufficient justification for deleting the task or increasing the time between repetitive performances of the CMR task. In general, One Star CMRs are not good candidates for escalation under an operator's reliability programme. A One Star CMR task change or interval escalation could only be made if world fleet service experience indicates that certain assumptions regarding component failure rates made early during the engineering analysis were overly conservative, and a re-calculation of system reliability with revised failure rates of certain components reveals that the task or interval may be changed.

b. The introduction of a new CMR or any change to an existing CMR should be reviewed by the same process used during initial certification. It is important that operators be afforded the same opportunity to participate they received during the original certification of the aeroplane, in order to allow the operators to manage their own maintenance programmes.

c. In the event that later data provide sufficient basis for a relaxation of a CMR (less restrictive actions to be required), the change may be documented by a EASA-approved change to the CMR document.

d. If the requirements of an existing CMR must be increased (more restrictive actions to be performed), it will be mandated by an airworthiness directive (AD).

e. After initial aeroplane certification, the only basis for adding a new CMR is in association with certification of design changes.

f. A new CMR created as part of a design change should be a part of the approved data for that change, and added to the CMR document.

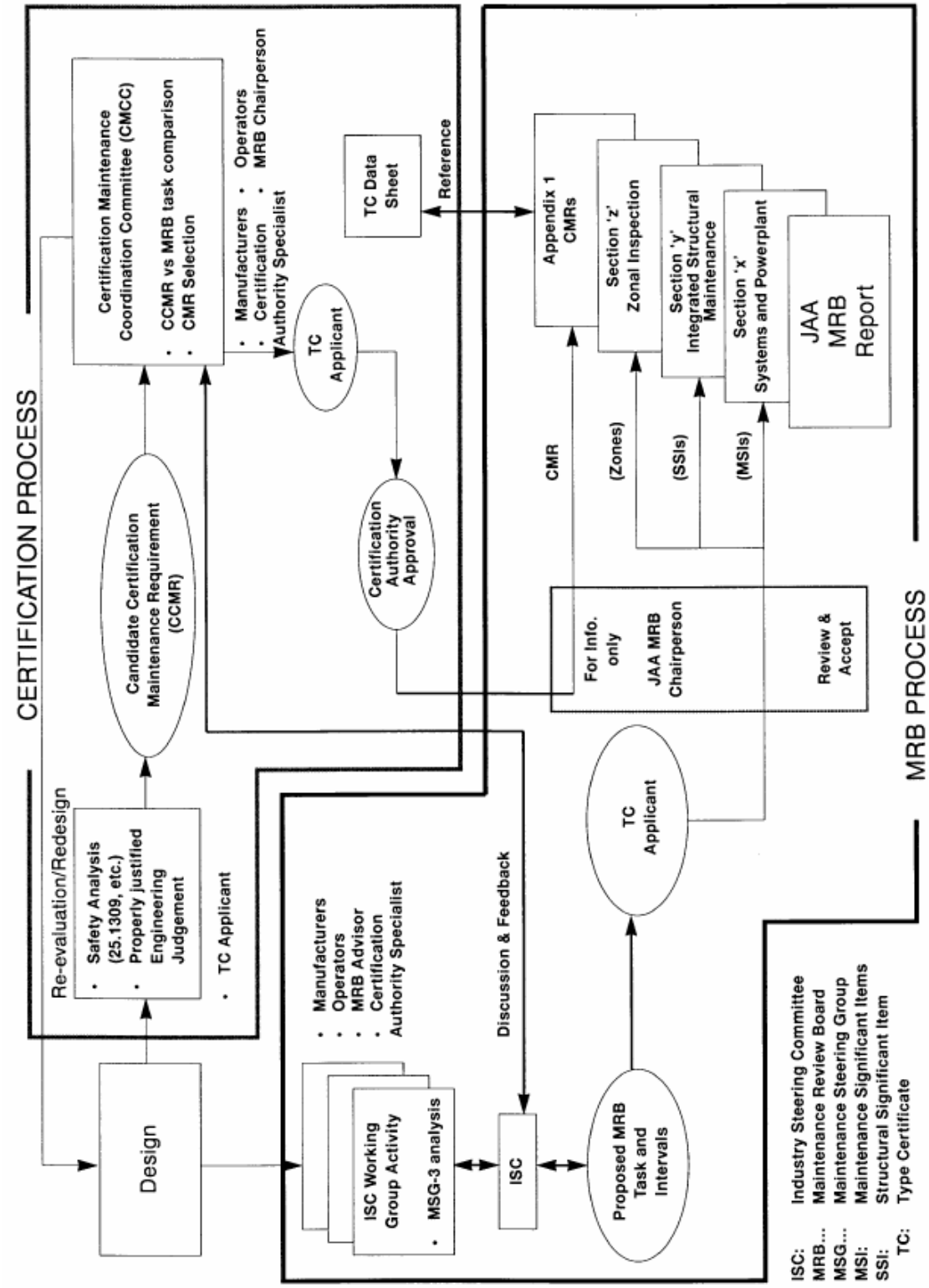

Figure 1 SCHEDULED MAINTENANCE TASK DEVELOPMENT

APPENDIX 1 GUIDANCE FOR USE OF CMRs

The underlying goal of any system design should be an absolute minimum number of CMRs, with none as the goal. However the final determination of system design, and ultimately the number of CMRs, after safety and reliability are assured, should be based on the total cost of ownership of the system (or the aeroplane), with due regard to weight, reliability, initial and recurring costs. If the cost of adding practical and reliable monitoring and/or warning to a system is large, and the added maintenance burden of a CMR is *small*, addition of a CMR may be the solution of choice for both the type certificate applicant and the operator.

A decision to create a CMR should include a rigorous trade-off of the cost, weight, or complexity of providing an alerting mechanism or device that will expose the latent failure, versus the requirement for the operator to conduct a maintenance or inspection task at fixed intervals. The following points should be considered in any decision to create a CMR.

a. What is the magnitude of the changes to the system and/or aeroplane needed to add a reliable monitoring or warning device that would expose the hidden failure? What is the cost in added system complexity?

b. Is it possible to introduce a self-test on power-up?

c. Is the monitoring and warning system reliable? False warnings must be considered as well as a lack of warnings.

d. Does the monitoring or warning system itself need a CMR due to its latent failure potential?

e. Is the CMR task reasonable, considering all aspects of the failure condition that the task is intended to address?

f. How long (or short) is the CMR task interval?

g. Is the proposed CMR task labour intensive or time consuming? Can it be done without having to 'gain access' and/or without workstands? Without test equipment? Can the CMR task be done without removing equipment from the aeroplane? Without having to re-adjust equipment? Without leak checks and/or engine runs?

h. Can a simple visual inspection be used instead of a complex one? Can a simple operational check suffice in lieu of a formal functional check against measured requirements?

i. Is there 'added value' to the proposed task (i.e. will the proposed task do more harm than good if the aeroplane must be continually inspected)?

j. Have all alternatives been evaluated?

[Amdt 25/1]

SUBPART B – FLIGHT

GENERAL

CS 25.20 Scope

ED Decision 2003/2/RM

(a) The requirements of this Subpart B apply to aeroplanes powered with turbine engines –

(1) Without contingency thrust ratings, and

(2) For which it is assumed that thrust is not increased following engine failure during take-off except as specified in sub-paragraph (c).

(b) In the absence of an appropriate investigation of operational implications these requirements do not necessarily cover –

(1) Automatic landings.

(2) Approaches and landings with decision heights of less than 60 m (200 ft).

(3) Operations on unprepared runway surfaces.

(c) If the aeroplane is equipped with an engine control system that automatically resets the power or thrust on the operating engine(s) when any engine fails during take-off, additional requirements pertaining to aeroplane performance and limitations and the functioning and reliability of the system, contained in Appendix I, must be complied with.

CS 25.21 Proof of compliance

ED Decision 2003/2/RM

(a) Each requirement of this Subpart must be met at each appropriate combination of weight and centre of gravity within the range of loading conditions for which certification is requested. This must be shown –

(1) By tests upon an aeroplane of the type for which certification is requested, or by calculations based on, and equal in accuracy to, the results of testing; and

(2) By systematic investigation of each probable combination of weight and centre of gravity, if compliance cannot be reasonably inferred from combinations investigated.

(b) Reserved

(c) The controllability, stability, trim, and stalling characteristics of the aeroplane must be shown for each altitude up to the maximum expected in operation.

(d) Parameters critical for the test being conducted, such as weight, loading (centre of gravity and inertia), airspeed, power, and wind, must be maintained within acceptable tolerances of the critical values during flight testing.

(e) If compliance with the flight characteristics requirements is dependent upon a stability augmentation system or upon any other automatic or power-operated system, compliance must be shown with CS 25.671 and 25.672.

(f) In meeting the requirements of CS 25.105(d), 25.125, 25.233 and 25.237, the wind velocity must be measured at a height of 10 metres above the surface, or corrected for the difference between the height at which the wind velocity is measured and the 10-metre height.

AMC 25.21(d) Proof of compliance

ED Decision 2003/2/RM

1 Where variation of the parameter on which a tolerance is permitted will have an appreciable effect on the test, the result should be corrected to the specified value of the parameter; otherwise no correction is necessary.

2 In areas of critical handling or stability, notwithstanding the tolerance of CS 25.21(d) (7% total travel), aft centre of gravity tests should be flown at a centre of gravity not more forward than the certificate aft centre of gravity limit. Tests which are critical on the forward centre of gravity limit should be flown at centres of gravity at least as forward as the certificate forward limit.

CS 25.23 Load distribution limits

ED Decision 2003/2/RM

(a) Ranges of weights and centres of gravity within which the aeroplane may be safely operated must be established. If a weight and centre of gravity combination is allowable only within certain load distribution limits (such as spanwise) that could be inadvertently exceeded, these limits and the corresponding weight and centre of gravity combinations must be established.

(b) The load distribution limits may not exceed –

(1) The selected limits;

(2) The limits at which the structure is proven; or

(3) The limits at which compliance with each applicable flight requirement of this Subpart is shown.

CS 25.25 Weight Limits

ED Decision 2003/2/RM

(a) *Maximum weights.* Maximum weights corresponding to the aeroplane operating conditions (such as ramp, ground taxi, take-off, en-route and landing) environmental conditions (such as altitude and temperature), and loading conditions (such as zero fuel weight, centre of gravity position and weight distribution) must be established so that they are not more than –

(1) The highest weight selected by the applicant for the particular conditions; or

(2) The highest weight at which compliance with each applicable structural loading and flight requirement is shown.

(3) The highest weight at which compliance is shown with the noise certification requirements.

(b) *Minimum weight.* The minimum weight (the lowest weight at which compliance with each applicable requirement of this CS-25 is shown) must be established so that it is not less than –

(1) The lowest weight selected by the applicant;

(2) The design minimum weight (the lowest weight at which compliance with each structural loading condition of this CS-25 is shown); or

(3) The lowest weight at which compliance with each applicable flight requirement is shown.

CS 25.27 Centre of gravity limits

ED Decision 2003/2/RM

The extreme forward and the extreme aft centre of gravity limitations must be established for each practicably separable operating condition. No such limit may lie beyond –

(a) The extremes selected by the applicant;

(b) The extremes within which the structure is proven; or

(c) The extremes within which compliance with each applicable flight requirement is shown.

CS 25.29 Empty weight and corresponding centre of gravity

ED Decision 2003/2/RM

(a) The empty weight and corresponding centre of gravity must be determined by weighing the aeroplane with –

(1) Fixed ballast;

(2) Unusable fuel determined under CS 25.959; and

(3) Full operating fluids, including –

(i) Oil;

(ii) Hydraulic fluid; and

(iii) Other fluids required for normal operation of aeroplane systems, except potable water, lavatory pre-charge water, and fluids intended for injection in the engine.

(b) The condition of the aeroplane at the time of determining empty weight must be one that is well defined and can be easily repeated.

CS 25.31 Removable ballast

ED Decision 2003/2/RM

Removable ballast may be used in showing compliance with the flight requirements of this Subpart.

CS 25.33 Propeller speed and pitch limits

ED Decision 2003/2/RM

(a) The propeller speed and pitch must be limited to values that will ensure –

(1) Safe operation under normal operating conditions; and

(2)Compliance with the performance requirements in CS 25.101 to 25.125.

(b) There must be a propeller speed limiting means at the governor. It must limit the maximum possible governed engine speed to a value not exceeding the maximum allowable rpm.

(c) The means used to limit the low pitch position of the propeller blades must be set so that the engine does not exceed 103% of the maximum allowable engine rpm or 99% of an approved maximum overspeed, whichever is greater, with –

(1) The propeller blades at the low pitch limit and governor inoperative;

(2) The aeroplane stationary under standard atmospheric conditions with no wind; and

(3) The engines operating at the maximum take-off torque limit for turbopropeller engine-powered aeroplanes.

PERFORMANCE

CS 25.101 General

ED Decision 2006/005/R

(a) Unless otherwise prescribed, aeroplanes must meet the applicable performance requirements of this Subpart for ambient atmospheric conditions and still air.

(b) The performance, as affected by engine power or thrust, must be based on the following relative humidities:

(1) 80%, at and below standard temperatures; and

(2) 34%, at and above standard temperatures plus 28°C (50°F).

Between these two temperatures, the relative humidity must vary linearly.

(c) The performance must correspond to the propulsive thrust available under the particular ambient atmospheric conditions, the particular flight condition, and the relative humidity specified in sub-paragraph (b) of this paragraph. The available propulsive thrust must correspond to engine power or thrust, not exceeding the approved power or thrust, less –

(1) Installation losses; and

(2) The power or equivalent thrust absorbed by the accessories and services appropriate to the particular ambient atmospheric conditions and the particular flight condition. (See AMCs No 1 and No 2 to CS 25.101(c).)

(d) Unless otherwise prescribed, the applicant must select the take-off, en-route, approach, and landing configuration for the aeroplane.

(e) The aeroplane configurations may vary with weight, altitude, and temperature, to the extent they are compatible with the operating procedures required by sub-paragraph (f) of this paragraph.

(f) Unless otherwise prescribed, in determining the accelerate-stop distances, take-off flight paths, take-off distances, and landing distances, changes in the aeroplane's configuration, speed, power, and thrust, must be made in accordance with procedures established by the applicant for operation in service.

(g) Procedures for the execution of balked landings and missed approaches associated with the conditions prescribed in CS 25.119 and 25.121(d) must be established.

(h) The procedures established under sub-paragraphs (f) and (g) of this paragraph must –

(1) Be able to be consistently executed in service by crews of average skill,

(2) Use methods or devices that are safe and reliable, and

(3) Include allowance for any time delays in the execution of the procedures, that may reasonably be expected in service. (See AMC 25.101(h)(3).)

(i) The accelerate-stop and landing distances prescribed in CS 25.109 and 25.125, respectively, must be determined with all the aeroplane wheel brake assemblies at the fully worn limit of their allowable wear range. (See AMC 25.101(i).)

[Amdt 25/2]

AMC 25.101 General

ED Decision 2003/2/RM

The test aeroplane used in the determination of the scheduled performance should be in a condition which, as far as is reasonably possible, is representative of the average new production aeroplane. Where the test aeroplane differs from this standard (e.g. with regard to engine idle thrust settings, flap rigging, etc.) it will be necessary to correct the measured performance for any significant performance effects of such differences.

AMC No. 1 to CS 25.101(c) Extrapolation of Performance with Weight

ED Decision 2003/2/RM

The variation of take-off, climb and landing performance with weight may be extrapolated without conservatism to a weight greater, by up to 10%, than the maximum weight tested and to a weight lower, by up to 10%, than the lowest weight tested. These ranges may not be applicable if there are significant discontinuities, or unusual variations, in the scheduling of the relevant speeds with weight, in the weight ranges covered by extrapolation.

AMC No. 2 to CS 25.101(c) General

ED Decision 2003/2/RM

1 GENERAL - CS 25.101

1.1 Explanation - Propulsion System Behaviour. CS 25.101(c) requires that aeroplane "performance must correspond to the propulsive thrust available under the particular ambient atmospheric conditions, the particular flight condition, . . ." The propulsion system's (i.e., turbine engines and propellers, where appropriate) installed performance characteristics are primarily a function of engine power setting, airspeed, propeller efficiency (where applicable), altitude, and ambient temperature. The effects of each of these variables must be determined in order to establish the thrust available for aeroplane performance calculations.

1.2 Procedures.

1.2.1 The intent is to develop a model of propulsion system performance that covers the approved flight envelope. Furthermore, it should be shown that the combination of the propulsion system performance model and the aeroplane performance model are validated by the takeoff performance test data, climb performance tests, and tests used to determine aeroplane drag. Installed propulsion system performance characteristics may be established via the following tests and analyses:

a. Steady-state engine power setting vs. thrust (or power) testing. Engines should be equipped with adequate instrumentation to allow the determination of thrust (or power). Data should be acquired in order to validate the model, including propeller installed thrust, if applicable, over the range of power settings, altitudes, temperatures, and airspeeds for which approval is sought. Although it is not possible to definitively list or foresee all of the types of instrumentation that might be considered adequate for determining thrust (or power) output, two examples used in past certification programmes are: (1) engine pressure rakes, with engines calibrated in a ground test cell, and (2) fan speed, with engines calibrated in

a ground test cell and the calibration data validated by the use of a flying test bed. In any case, the applicant should substantiate the adequacy of the instrumentation to be used for determining the thrust (or power) output.

b. Lapse rate takeoff testing to characterise the behaviour of power setting, rotor speeds, propeller effects (i.e., torque, RPM, and blade angle), or gas temperature as a function of time, thermal state, or airspeed, as appropriate. These tests should include the operation of an Automatic Takeoff Thrust Control System (ATTCS), if applicable, and should cover the range of power settings for which approval is sought.

i. Data for higher altitude power settings may be acquired via overboost (i.e., operating at a higher than normal power setting for the conditions) with the consent of the engine and propeller (when applicable) manufacturer(s). When considering the use of overboost on turbopropeller propulsion system installations to simulate higher altitude and ambient temperature range conditions, the capability to achieve an appropriate simulation should be evaluated based on the engine and propeller control system(s) and aircraft performance and structural considerations. Engine (gearbox) torque, rotor speed, or gas temperature limits, including protection devices to prohibit or limit exceedences, may prevent the required amount of overboost needed for performance at the maximum airport altitude sought for approval. Overboost may be considered as increased torque, reduced propeller speed, or a combination of both in order to achieve the appropriate blade angle for the higher altitude and ambient temperature range simulation. Consideration for extrapolations will depend on the applicant's substantiation of the proper turbopropeller propulsion system simulated test conditions.

ii. Lapse rate characteristics should be validated by takeoff demonstrations at the maximum airport altitude for which takeoff approval is being sought. Alternatively, if overboost (see paragraph (i) above) is used to simulate the thrust setting parameters of the maximum airport altitude for which takeoff approval is sought, the takeoff demonstrations of lapse rate characteristics can be performed at an airport altitude up to 915 m (3,000 feet) lower than the maximum airport altitude.

c. Thrust calculation substantiation. Installed thrust should be calculated via a mathematical model of the propulsion system, or other appropriate means, adjusted as necessary to match the measured inflight performance characteristics of the installed propulsion system. The propulsion system mathematical model should define the relationship of thrust to the power setting parameter over the range of power setting, airspeed, altitude, and temperature for which approval is sought. For turbojet aeroplanes, the propulsion system mathematical model should be substantiated by ground tests in which thrust is directly measured via a calibrated load cell or equivalent means. For turbopropeller aeroplanes, the engine power measurements should be substantiated by a calibrated dynamometer or equivalent means, the engine jet thrust should be established by an

acceptable engine model, and the propeller thrust and power characteristics should be substantiated by wind tunnel testing or equivalent means.

d. Effects of ambient temperature. The flight tests of paragraph 1.2.1.a. above will typically provide data over a broad range of ambient temperatures. Additional data may also be obtained from other flight or ground tests of the same type or series of engine. The objective is to confirm that the propulsion system model accurately reflects the effects of temperature over the range of ambient temperatures for which approval is being sought (operating envelope). Because thrust (or power) data can usually be normalised versus temperature using either dimensionless variables (e.g., theta exponents) or a thermodynamic cycle model, it is usually unnecessary to obtain data over the entire ambient temperature range. There is no need to conduct additional testing if:

i. The data show that the behaviour of thrust and limiting parameters versus ambient temperature can be predicted accurately; and

ii. Analysis based upon the test data shows that the propulsion system will operate at rated thrust without exceeding propulsion system limits.

1.2.2 Extrapolation of propulsion system performance data to 915 m (3,000 feet) above the highest airport altitude tested (up to the maximum takeoff airport altitude to be approved) is acceptable, provided the supporting data, including flight test and propulsion system operations data (e.g., engine and propeller control, limits exceedence, and surge protection devices scheduling), substantiates the proposed extrapolation procedures. Considerations for extrapolation depend upon an applicant's determination, understanding, and substantiation of the critical operating modes of the propulsion system. This understanding includes a determination and quantification of the effects that propulsion system installation and variations in ambient conditions have on these modes.

2 Expansion of Takeoff and Landing Data for a Range of Airport Elevations.

2.1 These guidelines are applicable to expanding aeroplane Flight Manual takeoff and landing data above and below the altitude at which the aeroplane takeoff and landing performance tests are conducted.

2.2 With installed propulsion system performance characteristics that have been adequately defined and verified, aeroplane takeoff and landing performance data obtained at one field elevation may be extrapolated to higher and lower altitudes within the limits of the operating envelope without applying additional performance conservatisms. It should be noted, however, that extrapolation of the propulsion system data used in the determination and validation of propulsion system performance characteristics is typically limited to 915 m (3,000 feet) above the highest altitude at which propulsion system parameters were evaluated for the pertinent power/thrust setting. (See paragraph 1 of this AMC for more information on an acceptable means of establishing and verifying installed propulsion system performance characteristics.)

2.3 Note that certification testing for operation at airports that are above 2438 m (8,000 feet) should also include functional tests of the cabin pressurisation system. Consideration should be given to any other systems whose operation may be sensitive to, or dependent upon airport altitude, such as: engine and APU starting, passenger oxygen, autopilot, autoland, autothrottle system thrust set/operation."

AMC 25.101(h)(3) General

ED Decision 2003/2/RM

CS 25.109(a) and (b) require the accelerate-stop distance to include a distance equivalent to 2 seconds at V_1 in addition to the demonstrated distance to accelerate to V_1 and then bring the aeroplane to a full stop. This additional distance is not intended to allow extra time for making a decision to stop as the aeroplane passes through V_1, but is to account for operational variability in the time it takes pilots to accomplish the actions necessary to bring the aeroplane to a stop. It allows for the typical requirement for up to three pilot actions (i.e. brakes – throttles – spoilers) without introducing additional time delays to those demonstrated. If the procedures require more than three pilot actions, an allowance for time delays must be made in the scheduled accelerate-stop distance. These delays, which are applied in addition to the demonstrated delays, are to be 1 second (or 2 seconds if a command to another crew member to take the action is required) for each action beyond the third action. This is illustrated in Figure 1.

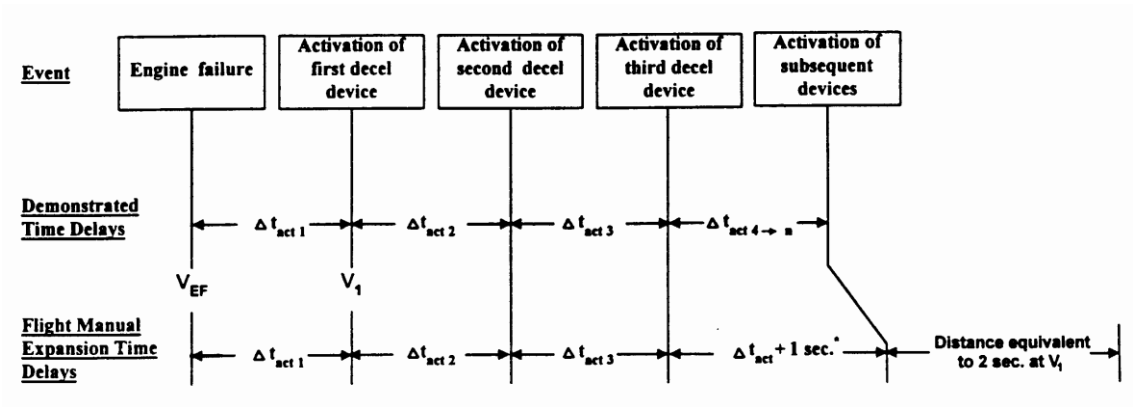

* 2 sec. where a command to another crew member is required.

FIGURE 1. ACCELERATE-STOP TIME DELAYS

where:–

V_{EF} is the calibrated airspeed selected by the applicant at which the critical engine is assumed to fail. The relationship between V_{EF} and V_1 is defined in CS 25.107.

$\Delta t_{act\ 1}$ = the demonstrated time interval between engine failure and activation of the first deceleration device. This time interval is defined as beginning at the instant the critical engine is failed and ending when the pilot recognises and reacts to the engine failure, as indicated by the pilot's application of the first retarding means during accelerate-stop tests. A sufficient number of demonstrations should be conducted using both applicant and Agency test pilots to assure that the time increment is representative and repeatable. The pilot's feet should be on the rudder pedals, not the brakes, during the tests. For AFM data expansion purposes, in order to provide a recognition time increment that can be executed consistently in service, this time increment should be equal to the demonstrated time or 1 second, whichever is greater. If the aeroplane incorporates an engine failure warning light, the recognition time includes the time increment necessary for the engine to spool down to the point of warning light activation, plus the time increment from light 'on' to pilot action indicating recognition of the engine failure.

$\Delta t_{act\ 2}$ = the demonstrated time interval between activation of the first and second deceleration devices.

$\Delta t_{act\ 3}$ = the demonstrated time interval between activation of the second and third deceleration devices.

$\Delta t_{act\ 4 \rightarrow n}$ = the demonstrated time interval between activation of the third and fourth (and any subsequent) deceleration devices. For AFM expansion, a 1-second reaction time delay to account for in-service variations should be added to the demonstrated activation time interval between the third and fourth (and any subsequent) deceleration devices. If a command is required for another crew member to actuate a deceleration device, a 2-second delay, in lieu of the 1-second delay, should be applied for each action. For automatic deceleration devices that are approved for performance credit for AFM data expansion, established systems actuation times determined during certification testing may be used without the application of the additional time delays required by this paragraph.

AMC 25.101(i) Performance determination with worn brakes

ED Decision 2003/2/RM

It is not necessary for all the performance testing on the aircraft to be conducted with fully worn brakes. Sufficient data should be available from aircraft or dynamometer rig tests covering the range of wear and energy levels to enable correction of the flight test results to the 100% worn level. The only aircraft test that should be carried out at a specific brake wear state is the maximum kinetic energy rejected take-off test of CS 25.109(i), for which all brakes should have not more than 10% of the allowable brake wear remaining.

CS 25.103 Stall speed

ED Decision 2003/2/RM

(a) The reference stall speed V_{SR} is a calibrated airspeed defined by the applicant. V_{SR} may not be less than a 1-g stall speed. V_{SR} is expressed as:

$$VSR \geq \frac{V_{CLMAX}}{\sqrt{n_{zw}}}$$

where –

V_{CLMAX} = Calibrated airspeed obtained when the loadfactor-corrected lift coefficient $\left(\frac{n_{zw}\,W}{qS}\right)$ is first a maximum during the manoeuvre prescribed in sub-paragraph (c) of this paragraph. In addition, when the manoeuvre is limited by a device that abruptly pushes the nose down at a selected angle of attack (e.g. a stick pusher), V_{CLMAX} may not be less than the speed existing at the instant the device operates;

n_{zw} = Load factor normal to the flight path at V_{CLMAX};

W = Aeroplane gross weight;

S= Aerodynamic reference wing area; and

q= Dynamic pressure.

(b) V_{CLMAX} is determined with:

(1) Engines idling, or, if that resultant thrust causes an appreciable decrease in stall speed, not more than zero thrust at the stall speed;

(2) Propeller pitch controls (if applicable) in the take-off position;

(3) The aeroplane in other respects (such as flaps and landing gear) in the condition existing in the test or performance standard in which V_{SR} is being used;

(4) The weight used when V_{SR} is being used as a factor to determine compliance with a required performance standard;

(5) The centre of gravity position that results in the highest value of reference stall speed; and

(6) The aeroplane trimmed for straight flight at a speed selected by the applicant, but not less than 1.13 V_{SR} and not greater than 1.3 V_{SR}.

(c) Starting from the stabilised trim condition, apply the longitudinal control to decelerate the aeroplane so that the speed reduction does not exceed 0.5 m/s^2 (one knot per second). (See AMC 25.103(b) and (c)).

(d) In addition to the requirements of sub-paragraph (a) of this paragraph, when a device that abruptly pushes the nose down at a selected angle of attack (e.g. a stick pusher) is installed, the reference stall speed, V_{SR}, may not be less than 3,7 km/h (2 kt) or 2%, whichever is greater, above the speed at which the device operates.

AMC 25.103(b) Stalling speed

ED Decision 2003/2/RM

The airplane should be trimmed for hands-off flight at a speed 13 percent to 30 percent above the anticipated V_{SR} with the engines at idle and the airplane in the configuration for which the stall speed is being determined. Then, using only the primary longitudinal control for speed reduction, a constant deceleration (entry rate) is maintained until the airplane is stalled, as defined in CS 25.201(d). Following the stall, engine thrust may be used as desired to expedite the recovery.

The analysis to determine V_{CLMAX} should disregard any transient or dynamic increases in recorded load factor, such as might be generated by abrupt control inputs, which do not reflect the lift capability of the aeroplane. The load factor normal to the flight path should be nominally 1.0 until V_{CLMAX} is reached.

AMC 25.103(c) Stall speed

ED Decision 2003/2/RM

The stall entry rate is defined as the mean rate of speed reduction (in m/s^2 (knots CAS/second)) in the deceleration to the stall in the particular stall demonstration, from a speed 10% above that stall speed, i.e.

$$Entry\ Rate = \frac{1 \cdot 1\ V_{CLMAX} - 1 \cdot 0\ V_{CLMAX}}{Time\ to\ decelerate\ from\ 1 \cdot 1\ V_{CLMAX}\ to\ V_{CLMAX}} (m/s^2 (knots\ CAS/sec))$$

AMC 25.103(d) Stall speed

ED Decision 2003/2/RM

In the case where a device that abruptly pushes the nose down at a selected angle of attack (e.g. a stick pusher) operates after C_{LMAX}, the speed at which the device operates, stated in CS 25.103(d), need not be corrected to 1g.

Test procedures should be in accordance with AMC 25.103(b) to ensure that no abnormal or unusual pilot control input is used to obtain an artificially low device activation speed.

CS 25.105 Take-off

ED Decision 2003/2/RM

(a) The take-off speeds described in CS 25.107, the accelerate-stop distance described in CS 25.109, the take-off path described in CS 25.111, and the take-off distance and take-off run described in CS 25.113, must be determined –

(1) At each weight, altitude, and ambient temperature within the operational limits selected by the applicant; and

(2) In the selected configuration for takeoff.

(b) No take-off made to determine the data required by this paragraph may require exceptional piloting skill or alertness.

(c) The take-off data must be based on:

(1) Smooth, dry and wet, hard-surfaced runways; and

(2) At the option of the applicant, grooved or porous friction course wet, hardsurfaced runways.

(d) The take-off data must include, within the established operational limits of the aeroplane, the following operational correction factors:

(1) Not more than 50% of nominal wind components along the take-off path opposite to the direction of take-off, and not less than 150% of nominal wind components along the take-off path in the direction of take-off.

(2) Effective runway gradients.

CS 25.107 Take-off speeds

ED Decision 2003/2/RM

(a) V_1 must be established in relation to V_{EF} as follows:

(1) V_{EF} is the calibrated airspeed at which the critical engine is assumed to fail. V_{EF} must be selected by the applicant, but may not be less than V_{MCG} determined under CS 25.149(e).

(2) V_1, in terms of calibrated airspeed, is selected by the applicant; however, V_1 may not be less than V_{EF} plus the speed gained with the critical engine inoperative during the time interval between the instant at which the critical engine is failed, and the instant at which the pilot recognises and reacts to the engine failure, as indicated by the pilot's initiation of the first action (e.g. applying brakes, reducing thrust, deploying speed brakes) to stop the aeroplane during accelerate-stop tests.

(b) V_{2MIN}, in terms of calibrated airspeed, may not be less than –

(1) 1·13 V_{SR} for –

(i) Two-engined and three-engined turbo-propeller powered aeroplanes; and

(ii) Turbojet powered aeroplanes without provisions for obtaining a significant reduction in the one-engineinoperative power-on stall speed;

(2) 1·08 V_{SR} for –

(i) Turbo-propeller powered aeroplanes with more than three engines; and

(ii) Turbojet powered aeroplanes with provisions for obtaining a significant reduction in the one-engine-inoperative power-on stall speed: and

(3) 1·10 times V_{MC} established under CS 25.149.

(c) V_2, in terms of calibrated airspeed, must be selected by the applicant to provide at least the gradient of climb required by CS 25.121(b) but may not be less than –

(1) V_{2MIN};

(2) V_R plus the speed increment attained (in accordance with CS 25.111(c)(2)) before reaching a height of 11 m (35 ft) above the takeoff surface; and

(3) A speed that provides the manoeuvring capability specified in CS 25.143(g).

(d) V_{MU} is the calibrated airspeed at and above which the aeroplane can safely lift off the ground, and continue the take-off. V_{MU} speeds must be selected by the applicant throughout the range of thrust-to-weight ratios to be certificated. These speeds may be established from free air data if these data are verified by ground take-off tests. (See AMC 25.107(d).)

(e) V_R, in terms of calibrated air speed, must be selected in accordance with the conditions of sub-paragraphs (1) to (4) of this paragraph:

(1) V_R may not be less than –

(i) V_1;

(ii) 105% of V_{MC};

(iii) The speed (determined in accordance with CS 25.111(c)(2)) that allows reaching V_2 before reaching a height of 11 m (35 ft) above the take-off surface; or

(iv) A speed that, if the aeroplane is rotated at its maximum practicable rate, will result in a V_{LOF} of not less than -

(A) 110% of V_{MU} in the allengines-operating condition, and 105% of V_{MU} determined at the thrust-to-weight ratio corresponding to the one-engine-inoperative condition; or

(B) If the V_{MU} attitude is limited by the geometry of the aeroplane (i.e., tail contact with the runway), 108% of V_{MU} in the all-engines-operating condition and 104% of V_{MU} determined at the thrust-to-weight ratio corresponding to the one-engine-inoperative condition. (See AMC 25.107(e)(1)(iv).)

(2) For any given set of conditions (such as weight, configuration, and temperature), a single value of V_R, obtained in accordance with this paragraph, must be used to show compliance with both the one-engine-inoperative and the all-engines-operating take-off provisions.

(3) It must be shown that the one-engine-inoperative take-off distance, using a rotation speed of 9.3 km/h (5 knots) less than V_R established in accordance with sub-paragraphs (e)(1) and (2) of this paragraph, does not exceed the corresponding one-engine-inoperative take-off distance using the established V_R. The take-off distances must be determined in accordance with CS 25.113(a)(1). (See AMC 25.107(e)(3).)

(4) Reasonably expected variations in service from the established take-off procedures for the operation of the aeroplane (such as over-rotation of the aeroplane and out-of-trim conditions) may not result in unsafe flight characteristics or in marked increases in the scheduled take-off distances established in accordance with CS 25.113(a). (See AMC No. 1 to CS 25.107(e)(4) and AMC No. 2 to CS 25.107(e)(4).)

(f) V_{LOF} is the calibrated airspeed at which the aeroplane first becomes airborne.

(g) V_{FTO}, in terms of calibrated airspeed, must be selected by the applicant to provide at least the gradient of climb required by CS 25.121(c), but may not be less than –

(1) 1.18 V_{SR}; and

(2) A speed that provides the manoeuvring capability specified in CS 25.143(g).

AMC 25.107(d) Take-off speeds

ED Decision 2003/2/RM

1 If cases are encountered where it is not possible to obtain the actual V_{MU} at forward centre of gravity with aeroplanes having limited elevator power (including those aeroplanes which have limited elevator power only over a portion of the take-off weight range), it will be permissible to test with a more aft centre of gravity and/or more than normal nose-up trim to obtain V_{MU}.

1.1 When V_{MU} is obtained in this manner, the values should be corrected to those which would have been attained at forward centre of gravity if sufficient elevator power had been available. The variation of V_{MU} with centre of gravity may be assumed to be the same as the variation of stalling speed in free air with centre of gravity for this correction.

1.2 In such cases where V_{MU} has been measured with a more aft centre of gravity and/or with more than normal nose-up trim, the V_R selected should (in addition to complying with the requirements of CS 25.107(e)) be greater by an adequate margin than the lowest speed at which the nose wheel can be raised from the runway with centre of gravity at its most critical position and with the trim set to the normal take-off setting for the weight and centre of gravity.

NOTE: A margin of 9,3 km/h (5 kt) between the lowest nose-wheel raising speed and V_R would normally be considered to be adequate.

2 Take-offs made to demonstrate V_{MU} should be continued until the aeroplane is out of ground effect. The aeroplane pitch attitude should not be decreased after lift-off.

AMC 25.107(e)(1)(iv) Take-off speeds

ED Decision 2003/2/RM

V_{MU} Testing for Geometry Limited Aeroplanes.

1 For aeroplanes that are geometry limited (i.e., the minimum possible V_{MU} speeds are limited by tail contact with the runway), CS 25.107(e)(1)(iv)(B) allows the V_{MU} to V_{LOF} speed margins to be reduced to 108% and 104% for the all-engines-operating and one-engineinoperative conditions, respectively. The V_{MU} demonstrated must be sound and repeatable.

2 One acceptable means for demonstrating compliance with CS 25.107(d) and 25.107(e)(1)(iv) with respect to the capability for a safe lift-off and fly-away from the geometry limited condition is to show that at the lowest thrust-to-weight ratio for the all-engines-operating condition:

2.1 During the speed range from 96 to 100% of the actual lift-off speed, the aft under-surface of the aeroplane should be in contact with the runway. Because of the dynamic nature of the test, it is recognised that contact will probably not be maintained during this entire speed range, and some judgement is necessary. It has been found acceptable for contact to exist approximately 50% of the time that the aeroplane is in this speed range.

2.2 Beyond the point of lift-off to a height of 11m (35 ft), the aeroplane's pitch attitude should not decrease below that at the point of lift-off, nor should the speed increase more than 10%.

2.3 The horizontal distance from the start of the take-off to a height of 11 m (35 ft) should not be greater than 105% of the distance determined in accordance with CS 25.113(a)(2) without the 115% factor.

AMC 25.107(e)(3) Take-off speeds

ED Decision 2003/2/RM

In showing compliance with CS 25.107(e)(3) –

a. Rotation at a speed of V_R-9,3 km/h (5 kt) should be carried out using, up to the point of lift-off, the same rotation technique, in terms of control input, as that used in establishing the one-engine-inoperative distance of CS 25.113(a)(1);

b. The engine failure speed used in the V_R-9,3 km/h (5 kt) demonstration should be the same as that used in the comparative take-off rotating at V_R;

c. The tests should be carried out both at the lowest practical weight (such that V_R-9,3 km/h (5 kt) is not less than V_{MCG}) and at a weight approaching take-off climb limiting conditions;

d. The tail or tail skid should not contact the runway.

AMC No. 1 to CS 25.107(e)(4) Take-off speeds

ED Decision 2003/2/RM

Reasonably expected variations in service from established take-off procedures should be evaluated in respect of out-of-trim conditions during certification flight test programmes. For example, normal take-off should be made with the longitudinal control trimmed to its most adverse position within the allowable take-off trim band.

AMC No. 2 to CS 25.107(e)(4) Take-off speeds

ED Decision 2003/2/RM

1 CS 25.107(e)(4) states that there must be no marked increase in the scheduled take-off distance when reasonably expected service variations, such as over-rotation, are encountered. This can be interpreted as requiring take-off tests with all engines operating with an abuse on rotation speed.

2 The expression 'marked increase' in the take-off distance is defined as any amount in excess of 1% of the scheduled take-off distance. Thus the abuse test should not result in a field length more than 101% of the scheduled field length.

3 For the early rotation abuse condition with all engines operating and at a weight as near as practicable to the maximum sea-level take-off weight, it should be shown by test that when the aeroplane is rotated rapidly at a speed which is 7% or 19 km/h (10 kt), whichever is lesser, below the scheduled V_R speed, no 'marked increase' in the scheduled field length would result.

CS 25.109 Accelerate-stop distance

ED Decision 2003/2/RM

(a) (See AMC 25.109(a) and (b).) The accelerate-stop distance on a dry runway is the greater of the following distances:

(1) The sum of the distances necessary to –

(i) Accelerate the aeroplane from a standing start with all engines operating to V_{EF} for take-off from a dry runway;

(ii) Allow the aeroplane to accelerate from V_{EF} to the highest speed reached during the rejected take-off, assuming the critical engine fails at V_{EF} and the pilot takes the first action to reject the take-off at the V_1 for take-off from a dry runway; and

(iii) Come to a full stop on a dry runway from the speed reached as prescribed in sub-paragraph (a)(1)(ii) of this paragraph; plus

(iv) A distance equivalent to 2 seconds at the V_1 for take-off from a dry runway.

(2) The sum of the distances necessary to –

(i) Accelerate the aeroplane from a standing start with all engines operating to the highest speed reached during the rejected take-off, assuming the pilot takes the first action to reject the take-off at the V_1 for take-off from a dry runway; and

(ii) With all engines still operating, come to a full stop on a dry runway from the speed reached as prescribed in sub-paragraph (a)(2)(i) of this paragraph; plus

(iii) A distance equivalent to 2 seconds at the V_1 for take-off from a dry runway.

(b) (See AMC 25.109(a) and (b).) The accelerate-stop distance on a wet runway is the greater of the following distances:

(1) The accelerate-stop distance on a dry runway determined in accordance with sub-paragraph (a) of this paragraph; or

(2) The accelerate-stop distance determined in accordance with sub-paragraph (a) of this paragraph, except that the runway is wet and the corresponding wet runway values of V_{EF} and V_1 are used. In determining the wet runway accelerate-stop distance, the stopping force from the wheel brakes may never exceed:

(i) The wheel brakes stopping force determined in meeting the requirements of CS 25.101(i) and sub-paragraph (a) of this paragraph; and

(ii) The force resulting from the wet runway braking coefficient of friction determined in accordance with subparagraphs (c) or (d) of this paragraph, as applicable, taking into account the distribution of the normal load between braked and unbraked wheels at the most adverse centre of gravity position approved for take-off.

(c) The wet runway braking coefficient of friction for a smooth wet runway is defined as a curve of friction coefficient versus ground speed and must be computed as follows:

(1) The maximum tyre-to-ground wet runway braking coefficient of friction is defined as (see Figure 1):

Tyre Pressure (psi)	Maximum Braking Coefficient (tyre-to-ground)
50	$\mu_{t/gMAX} = -0{\cdot}0350\left(\frac{V}{100}\right)^3 + 0{\cdot}306\left(\frac{V}{100}\right)^2 - 0{\cdot}851\left(\frac{V}{100}\right) + 0{\cdot}883$
100	$\mu_{t/gMAX} = -0{\cdot}0437\left(\frac{V}{100}\right)^3 + 0{\cdot}320\left(\frac{V}{100}\right)^2 - 0{\cdot}805\left(\frac{V}{100}\right) + 0{\cdot}804$
200	$\mu_{t/gMAX} = -0{\cdot}0331\left(\frac{V}{100}\right)^3 + 0{\cdot}252\left(\frac{V}{100}\right)^2 - 0{\cdot}658\left(\frac{V}{100}\right) + 0{\cdot}692$
300	$\mu_{t/gMAX} = -0{\cdot}0401\left(\frac{V}{100}\right)^3 + 0{\cdot}263\left(\frac{V}{100}\right)^2 - 0{\cdot}611\left(\frac{V}{100}\right) + 0{\cdot}614$

Figure 1

where:

Tyre Pressure = maximum aeroplane operating tyre pressure (psi)

$\mu_{t/gMAX}$ = maximum tyre-to-ground braking coefficient

V = aeroplane true ground speed (knots); and

Linear interpolation may be used for tyre pressures other than those listed.

(2) (See AMC 25.109(c)(2) The maximum tyre-to-ground wet runway braking coefficient of friction must be adjusted to take into account the efficiency of the anti-skid system on a wet runway. Anti-skid system operation must be demonstrated by flight testing on a smooth wet runway and its efficiency must be determined. Unless a specific anti-skid system efficiency is determined from a quantitative analysis of the flight testing on a smooth wet runway, the maximum tyre-to-ground wet runway braking coefficient of friction determined in sub-paragraph (c)(1) of this paragraph must be multiplied by the efficiency value associated with the type of anti-skid system installed on the aeroplane:

Type of anti-skid system	Efficiency value
On-off	0·30
Quasi-modulating	0·50
Fully modulating	0·80

(d) At the option of the applicant, a higher wet runway braking coefficient of friction may be used for runway surfaces that have been grooved or treated with a porous friction course material. For grooved and porous friction course runways,

(1) 70% of the dry runway braking coefficient of friction used to determine the dry runway accelerate-stop distance; or

(2) (See AMC 25.109(d)(2).) The wet runway braking coefficient of friction defined in sub-paragraph (c) of this paragraph, except that a specific anti-skid efficiency, if determined, is appropriate for a grooved or porous friction course wet runway and the maximum tyre-to-ground wet runway braking coefficient of friction is defined as (see Figure 2):

Tyre Pressure (psi)	Maximum Braking Coefficient (tyre-to-ground)
50	$\mu_{t/gMAX} = 0{\cdot}147\left(\frac{V}{100}\right)^5 - 1{\cdot}05\left(\frac{V}{100}\right)^4 + 2{\cdot}673\left(\frac{V}{100}\right)^3 - 2{\cdot}683\left(\frac{V}{100}\right)^2 + 0{\cdot}403\left(\frac{V}{100}\right) + 0{\cdot}859$
100	$\mu_{t/gMAX} = 0{\cdot}1106\left(\frac{V}{100}\right)^5 - 0{\cdot}813\left(\frac{V}{100}\right)^4 + 2{\cdot}13\left(\frac{V}{100}\right)^3 - 2{\cdot}20\left(\frac{V}{100}\right)^2 + 0{\cdot}317\left(\frac{V}{100}\right) + 0{\cdot}807$
200	$\mu_{t/gMAX} = 0{\cdot}0498\left(\frac{V}{100}\right)^5 - 0{\cdot}398\left(\frac{V}{100}\right)^4 + 1{\cdot}14\left(\frac{V}{100}\right)^3 - 1{\cdot}285\left(\frac{V}{100}\right)^2 + 0{\cdot}140\left(\frac{V}{100}\right) + 0.701$
300	$\mu_{t/gMAX} = 0{\cdot}0314\left(\frac{V}{100}\right)^5 - 0{\cdot}247\left(\frac{V}{100}\right)^4 + 0{\cdot}703\left(\frac{V}{100}\right)^3 - 0{\cdot}779\left(\frac{V}{100}\right)^2 - 0{\cdot}00954\left(\frac{V}{100}\right) + 0{\cdot}614$

Figure 2

where:

Tyre Pressure = maximum aeroplane operating tyre pressure (psi)

$\mu_{t/gMAX}$ = maximum tyre-to-ground braking coefficient

V = aeroplane true ground speed (knots); and Linear interpolation may be used for tyre pressures other than those listed.

(e) Except as provided in sub-paragraph (f)(1) of this paragraph, means other than wheel brakes may be used to determine the accelerate-stop distance if that means –

(1) Is safe and reliable;

(2) Is used so that consistent results can be expected under normal operating conditions; and

(3) Is such that exceptional skill is not required to control the aeroplane.

(f) The effects of available reverse thrust –

(1) Must not be included as an additional means of deceleration when determining the accelerate-stop distance on a dry runway; and

(2) May be included as an additional means of deceleration using recommended reverse thrust procedures when determining the accelerate-stop distance on a wet runway, provided the requirements of sub-paragraph (e) of this paragraph are met. (See AMC 25.109(f).)

(g) The landing gear must remain extended throughout the accelerate-stop distance.

(h) If the accelerate-stop distance includes a stopway with surface characteristics substantially different from those of the runway, the take-off data must include operational correction factors for the accelerate-stop distance. The correction factors must account for the particular surface characteristics of the stopway and the variations in these characteristics with seasonal weather conditions (such as temperature, rain, snow and ice) within the established operational limits.

(i) A flight test demonstration of the maximum brake kinetic energy accelerate-stop distance must be conducted with not more than 10% of the allowable brake wear range remaining on each of the aeroplane wheel brakes.

AMC 25.109(a) and (b) Accelerate-stop distance

ED Decision 2003/2/RM

Propeller pitch position. For the one-engine-inoperative accelerate-stop distance, the critical engine's propeller should be in the position it would normally assume when an engine fails and the power levers are closed. For dry runway one-engine-inoperative accelerate-stop distances, the high drag ground idle position of the operating engines' propellers (defined by a pitch setting that results in not less than zero total thrust, i.e. propeller plus jet thrust, at zero airspeed) may be used provided adequate directional control is available on a wet runway and the related operational procedures comply with CS 25.109(f) and (h). Wet runway controllability may either be demonstrated by using the guidance available in AMC 25.109(f) at the appropriate power level, or adequate control can be assumed to be available at ground idle power if reverse thrust credit is approved for determining the wet runway accelerate-stop distances. For the all-engines-operating accelerate-stop distances on a dry runway, the high drag ground idle propeller position may be used for all engines (subject to CS 25.109(f) and (h)). For criteria relating to reverse thrust credit for wet runway accelerate-stop distances, see AMC 25.109(f).

AMC 25.109(c)(2) Accelerate-stop distance: anti-skid system efficiency

ED Decision 2003/2/RM

CS 25.109(c)(2) identifies 3 categories of anti-skid system and provides for either the use of a default efficiency value appropriate to the type of system or the determination of a specific efficiency value. Paragraph 1 of this AMC gives a description of the operating characteristics of each category to enable the classification of a particular system to be determined. Paragraph 2 gives an acceptable means of compliance with the requirement for flight testing and use of default efficiency values in accordance with CS 25.109(c)(2). These values are appropriate where the tuning of the anti-skid system is largely qualitative and without detailed quantitative analysis of system performance. Where detailed data

recording and analysis is used to optimise system tuning, an efficiency value somewhat higher than the default value might be obtained and determined. Typically, a value of 40% might be achieved with an On/Off system. The quasi-modulating category covers a broad range of systems with varying performance levels. The best quasi-modulating systems might achieve an efficiency up to approximately 80%. Fully modulating systems have been tuned to efficiencies greater than 80% and up to a maximum of approximately 92%, which is considered to be the maximum efficiency on a wet runway normally achievable with fully modulating digital anti-skid systems. Paragraph 3 gives an acceptable means of compliance with CS 25.109(c)(2) where the applicant elects to determine a specific efficiency value.

In Paragraph 4 of this AMC, guidance is given on the use of 2 alternative methods for calculating antiskid system efficiency from the recorded data. One method is based on the variation of brake torque throughout the stop, while the other is based on wheel speed slip ratio. Finally, Paragraph 5 gives guidance on accounting for the distribution of the normal load between braked and unbraked wheels.

1 *Classification of anti-skid system types*

1.1 For the purposes of determining the default anti-skid efficiency value under CS 25.109(c)(2), anti-skid systems have been grouped into three broad classifications; on/off, quasi-modulating and fully modulating. These classifications represent evolving levels of technology and performance capabilities on both dry and wet runways.

1.2 On/off systems are the simplest of the three types of anti-skid systems. For these systems, fully metered brake pressure (as commanded by the pilot) is applied until wheel locking is sensed. Brake pressure is then released to allow the wheel to spin back up. When the system senses that the wheel is accelerating back to synchronous speed (i.e. ground speed), full metered pressure is again applied. The cycle of full pressure application/complete pressure release is repeated throughout the stop (or until the wheel ceases to skid with brake pressure applied).

1.3 Quasi-modulating systems attempt to continuously regulate brake pressure as a function of wheel speed. Typically, brake pressure is released when the wheel deceleration rate exceeds a preselected value. Brake pressure is re-applied at a lower level after a length of time appropriate to the depth of skid. Brake pressure is then gradually increased until another incipient skid condition is sensed. In general, the corrective actions taken by these systems to exit the skid condition are based on a pre-programmed sequence rather than the wheel speed time history.

1.4 Fully modulating systems are a further refinement of the quasi-modulating systems. The major difference between these two types of anti-skid systems is in the implementation of the skid control logic. During a skid, corrective action is based on the sensed wheel speed signal, rather than a preprogrammed response. Specifically, the amount of pressure reduction or reapplication is based on the rate at which the wheel is going into or recovering from a skid. Also, higher fidelity transducers and upgraded control systems are used, which respond more quickly.

1.5 In addition to examining the control system differences noted above, a time history of the response characteristics of the anti-skid system during a wet runway stop should be used to help identify the type of anti-skid system. Comparing the response characteristics from wet and dry runway stops can also be helpful.

Figure 1 shows an example of the response characteristics of a typical on-off system on both wet and dry runways. In general, the on-off system exhibits a cyclic behaviour of brake pressure application until a skid is sensed, followed by the complete release of brake pressure to allow

the wheel to spin back up. Full metered pressure (as commanded by the pilot) is then re-applied, starting the cycle over again. The wheel speed trace exhibits deep and frequent skids (the troughs in the wheel speed trace), and the average wheel speed is significantly less than the synchronous speed (which is represented by the flat topped portions of the wheel speed trace). Note that the skids are deeper and more frequent on a wet runway than on a dry runway. For the particular example shown in Figure 1, the brake becomes torque-limited toward the end of the dry runway stop and is unable to generate enough torque to cause further skidding.

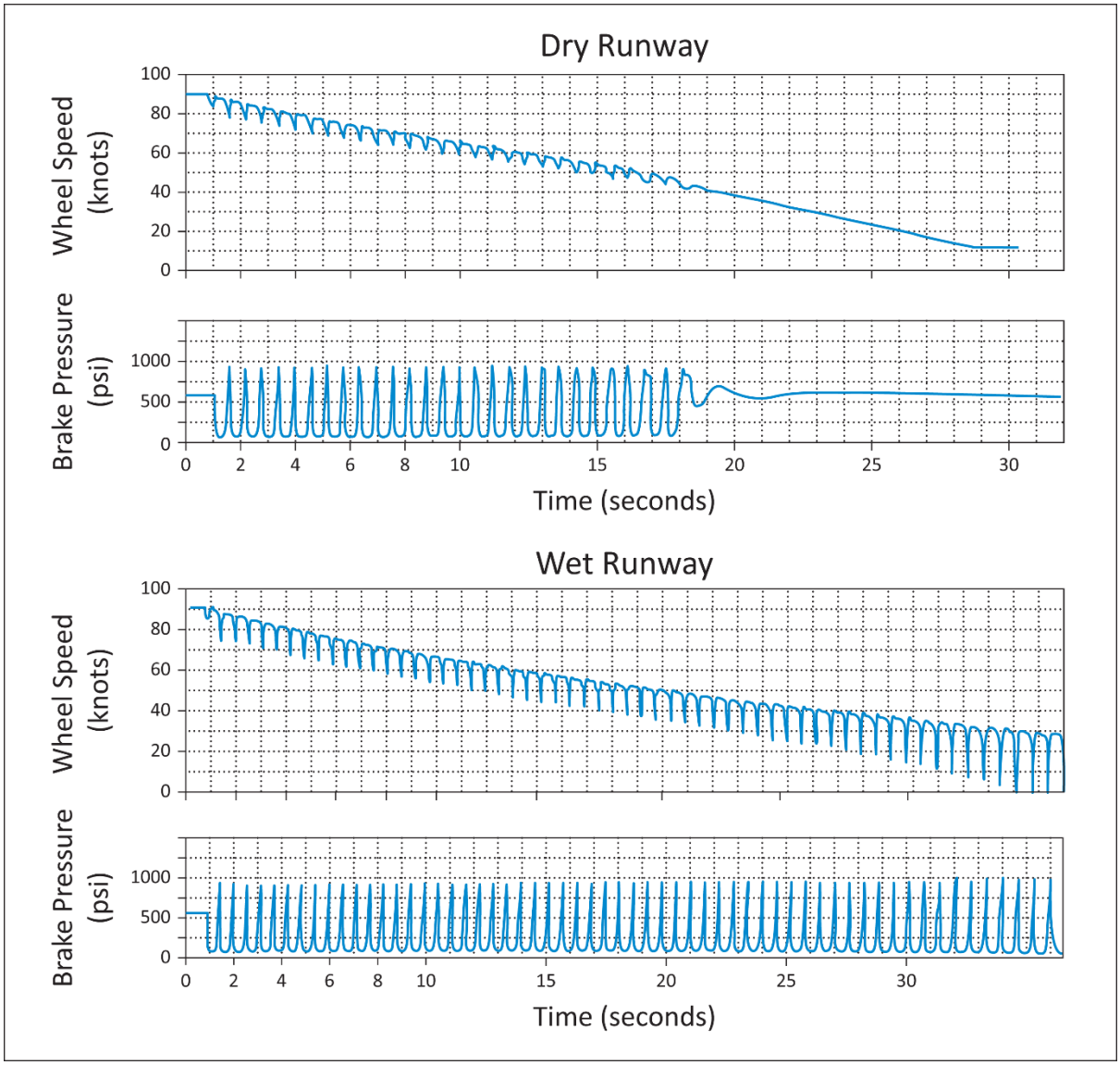

FIGURE 1. ANTI-SKID SYSTEM RESPONSE CHARACTERISTICS On-Off System

The effectiveness of quasi-modulating systems can vary significantly depending on the slipperiness of the runway and the design of the particular control system. On dry runways, these systems typically perform very well; however, on wet runways their performance is highly dependent on the design and tuning of the particular system. An example of the response characteristics of one such system is shown in Figure 2. On both dry and wet runways, brake pressure is released to the extent necessary to control skidding. As the wheel returns to the synchronous speed, brake pressure is quickly increased to a pre-determined level and then gradually ramped up to the full metered brake pressure. On a dry runway, this type of response

reduces the depth and frequency of skidding compared to an on-off system. However, on a wet runway, skidding occurs at a pressure below that at which the gradual ramping of brake pressure occurs. As a result, on wet runways the particular system shown in Figure 2 operates very similarly to an on-off system.

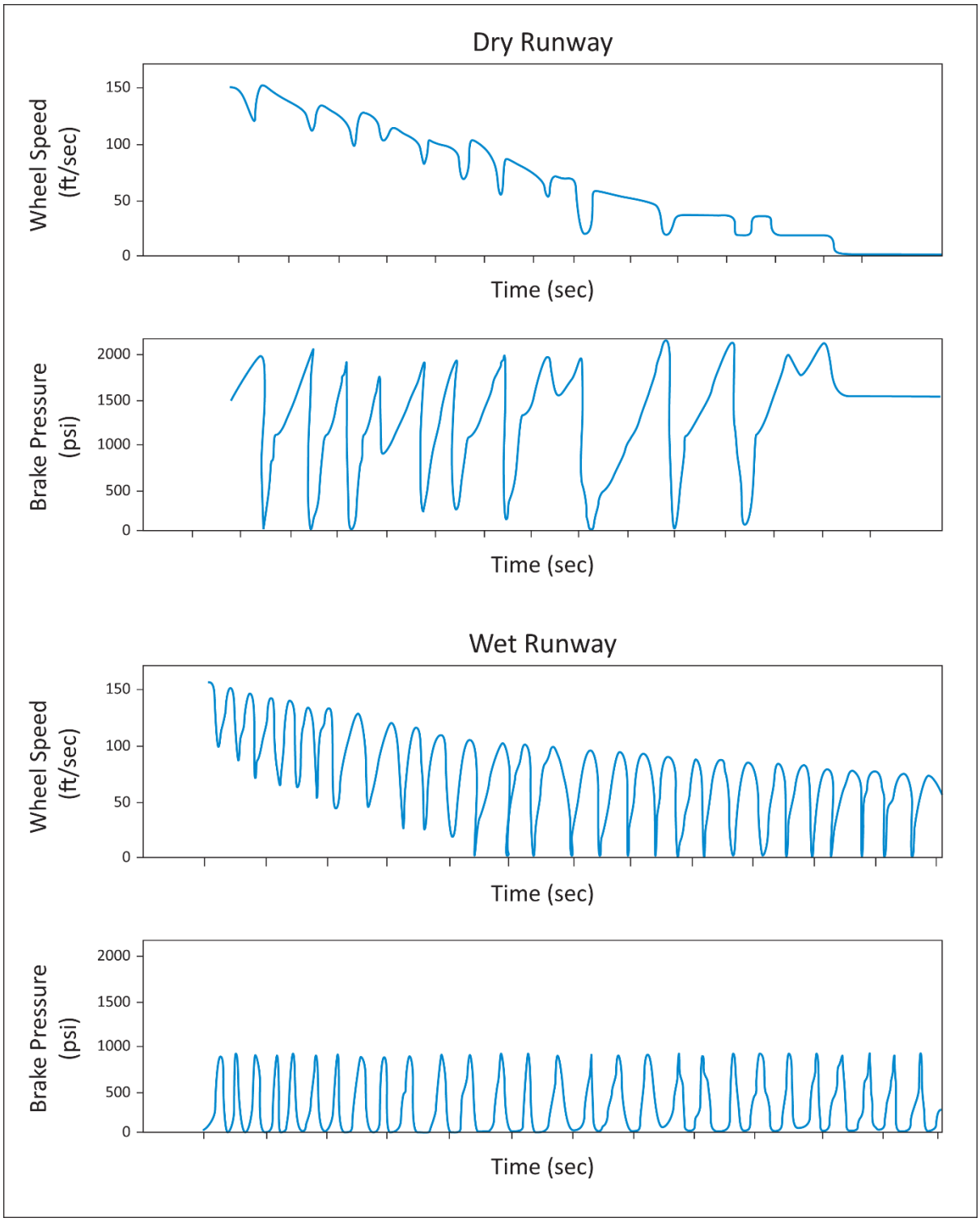

FIGURE 2. ANTI-SKID SYSTEM RESPONSE CHARACTERISTICS Quasi-Modulating System

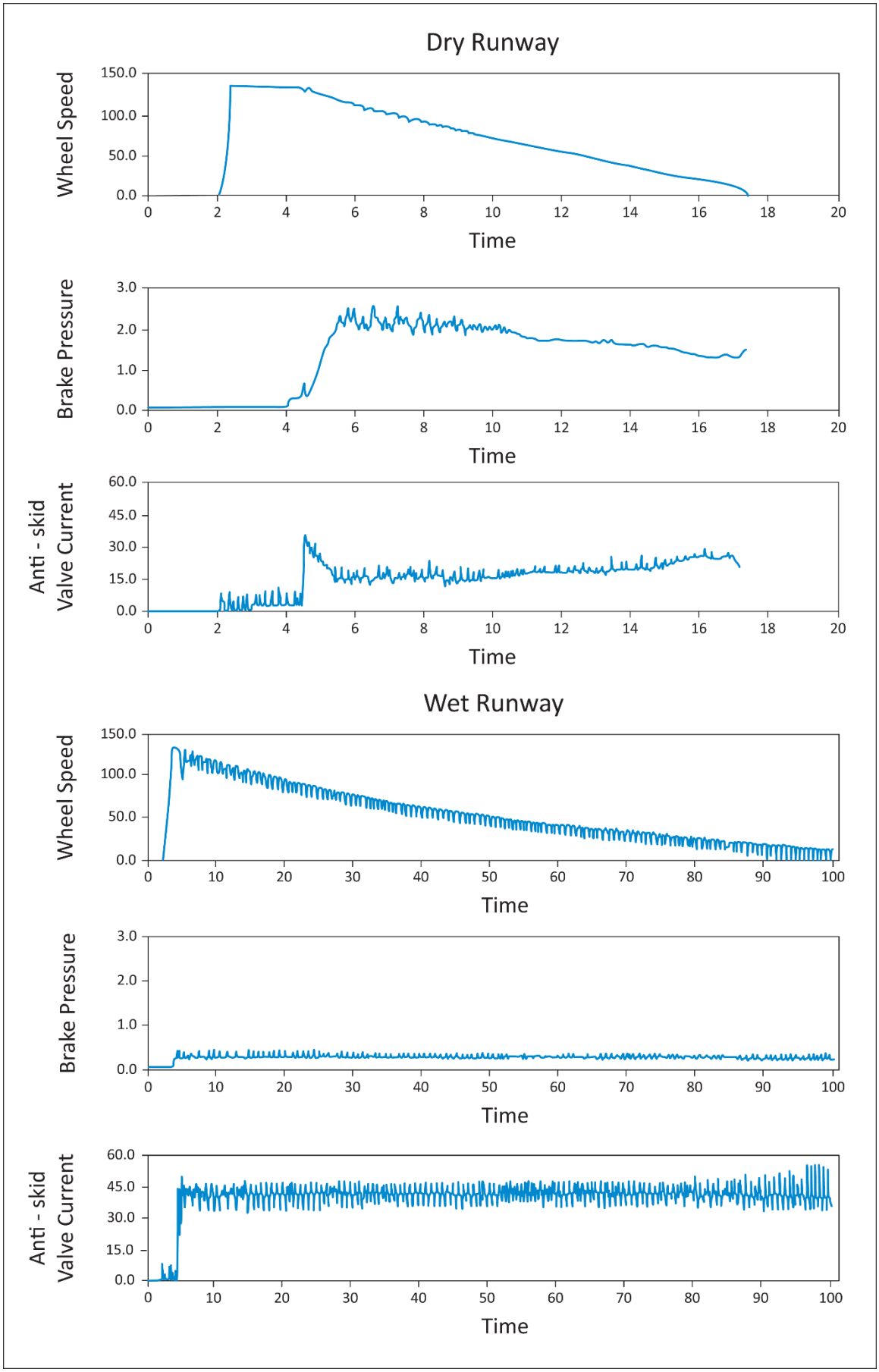
Dry Runway
Wheel Speed
150.0
100.0
50.0
0.0
0 2 4 6 8 10 12 14 16 18 20
Time
Brake Pressure
3.0
2.0
1.0
0.0
0 2 4 6 8 10 12 14 16 18 20
Time
Anti - skid Valve Current
60.0
45.0
30.0
15.0
0.0
0 2 4 6 8 10 12 14 16 18 20
Time
Wet Runway
Wheel Speed
150.0
100.0
50.0
0.0
0 10 20 30 40 50 60 70 80 90 100
Time
Brake Pressure
3.0
2.0
1.0
0.0
0 10 20 30 40 50 60 70 80 90 100
Time
Anti - skid Valve Current
60.0
45.0
30.0
15.0
0.0
0 10 20 30 40 50 60 70 80 90 100
Time

FIGURE 3. ANTI-SKID SYSTEM RESPONSE CHARACTERISTICS Fully Modulating System

When properly tuned, fully modulating systems are characterised by much smaller variations in brake pressure around a fairly high average value. These systems can respond quickly to developing skids and are capable of modulating brake pressure to reduce the frequency and depth of skidding. As a result, the average wheel speed remains much closer to the synchronous wheel speed. Figure 3 illustrates an example of the response characteristics of a fully modulating system on dry and wet runways.

2 *Demonstration of anti-skid system operation when using the anti-skid efficiency values specified in CS 25.109(c)(2)*

2.1 If the applicant elects to use one of the anti-skid efficiency values specified in CS 25.109(c)(2), a limited amount of flight testing must still be conducted to verify that the anti-skid system operates in a manner consistent with the type of anti-skid system declared by the applicant. This testing should also demonstrate that the anti-skid system has been properly tuned for operation on wet runways.

2.2 A minimum of one complete stop, or equivalent segmented stops, should be conducted on a smooth (i.e. not grooved or porous friction course) wet runway at an appropriate speed and energy to cover the critical operating mode of the anti-skid system. Since the objective of the test is to observe the operation (i.e. cycling) of the anti-skid system, this test will normally be conducted at an energy well below the maximum brake energy condition.

2.3 The section of the runway used for braking should be well soaked (i.e. not just damp), but not flooded. The runway test section should be wet enough to result in a number of cycles of anti-skid activity, but should not cause hydroplaning.

2.4 Before taxy and with cold tyres, the tyre pressure should be set to the highest value appropriate to the take-off weight for which approval is being sought.

2.5 The tyres and brakes should not be new, but need not be in the fully worn condition. They should be in a condition considered representative of typical in-service operations.

2.6 Sufficient data should be obtained to determine whether the system operates in a manner consistent with the type of anti-skid system declared by the applicant, provide evidence that full brake pressure is being applied upstream of the anti-skid valve during the flight test demonstration, determine whether the anti-skid valve is performing as intended and show that the anti-skid system has been properly tuned for a wet runway.

Typically, the following parameters should be plotted versus time:

(i) The speed of a representative number of wheels.

(ii) The hydraulic pressure at each brake (i.e. the hydraulic pressure downstream of the anti-skid valve, or the electrical input to each anti-skid valve).

(iii) The hydraulic pressure at each brake metering valve (i.e. upstream of the anti-skid valve).

2.7 A qualitative assessment of the anti-skid system response and aeroplane controllability should be made by the test pilot(s). In particular, pilot observations should confirm that:

(i) Anti-skid releases are neither excessively deep nor prolonged;

(ii) The gear is free of unusual dynamics; and

(iii) The aeroplane tracks essentially straight, even though runway seams, water puddles and wetter patches may not be uniformly distributed in location or extent.

3 *Determination of a specific wet runway anti-skid system efficiency*

3.1 If the applicant elects to derive the anti-skid system efficiency from flight test demonstrations, sufficient flight testing, with adequate instrumentation, must be conducted to ensure confidence in the value obtained. An anti-skid efficiency of 92% (i.e. a factor of 0·92) is considered to be the maximum efficiency on a wet runway normally achievable with fully modulating digital anti-skid systems.

3.2 A minimum of three complete stops, or equivalent segmented stops, should be conducted on a wet runway at appropriate speeds and energies to cover the critical operating modes of the anti-skid system. Since the objective of the test is to determine the efficiency of the anti-skid system, these tests will normally be conducted at energies well below the maximum brake energy condition. A sufficient range of speeds should be covered to investigate any variation of the anti-skid efficiency with speed.

3.3 The testing should be conducted on a smooth (i.e. not grooved or porous friction course) runway.

3.4 The section of the runway used for braking should be well soaked (i.e. not just damp), but not flooded. The runway test section should be wet enough to result in a number of cycles of anti-skid activity, but should not cause hydroplaning.

3.5 Before taxy and with cold tyres, the tyre pressure should be set to the highest value appropriate to the take-off weight for which approval is being sought.

3.6 The tyres and brake should not be new, but need not be in the fully worn condition. They should be in a condition considered representative of typical in-service operations.

3.7 A qualitative assessment of anti-skid system response and aeroplane controllability should be made by the test pilot(s). In particular, pilot observations should confirm that:

(i) The landing gear is free of unusual dynamics; and

(ii) The aeroplane tracks essentially straight, even though runway seams, water puddles and wetter patches may not be uniformly distributed in location or extent.

3.8 The wet runway anti-skid efficiency value should be determined as described in Paragraph 4 of this AMC. The test instrumentation and data collection should be consistent with the method used.

4 *Calculation of anti-skid system efficiency*

4.1 Paragraph 3 above provides guidance on the flight testing required to support the determination of a specific anti-skid system efficiency value. The following paragraphs describe 2 methods of calculating an efficiency value from the data recorded. These two methods, which yield equivalent results, are referred to as the torque method and the wheel slip method. Other methods may also be acceptable if they can be shown to give equivalent results.

4.2 *Torque Method*

Under the torque method, the anti-skid system efficiency is determined by comparing the energy absorbed by the brake during an actual wet runway stop to the energy that is determined by integrating, over the stopping distance, a curve defined by connecting the peaks of the instantaneous brake force curve (see figure 4). The energy absorbed by the

brake during the actual wet runway stop is determined by integrating the curve of instantaneous brake force over the stopping distance.

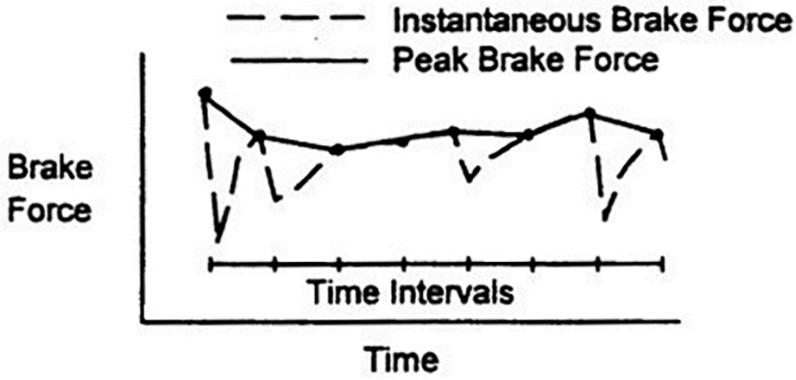

FIGURE 4. INSTANTANEOUS BRAKE FORCE AND PEAK BRAKE FORCE

Using data obtained from the wet runway stopping tests of paragraph 3, instantaneous brake force can be calculated from the following relationship:

$$F_b = \frac{(T_b + \alpha I)}{\mathrm{R}_{tyre}}$$

where:

F_b = brake force

T_b = brake torque

α = wheel acceleration

I = wheel moment of inertia; and

R_{tyre} = tyre radius

For brake installations where measuring brake torque directly is impractical, torque may be determined from other parameters (e.g. brake pressure) if a suitable correlation is available. Wheel acceleration is obtained from the first derivative of wheel speed. Instrumentation recording rates and data analysis techniques for wheel speed and torque data should be well matched to the anti-skid response characteristics to avoid introducing noise and other artifacts of the instrumentation system into the data.

Since the derivative of wheel speed is used in calculating brake force, smoothing of the wheel speed data is usually necessary to give good results. The smoothing algorithm should be carefully designed as it can affect the resulting efficiency calculation. Filtering or smoothing of the brake torque or brake force data should not normally be done. If conditioning is applied, it should be done in a conservative manner (i.e. result in a lower efficiency value) and should not misrepresent actual aeroplane/system dynamics.

Both the instantaneous brake force and the peak brake force should be integrated over the stopping distance. The anti-skid efficiency value for determining the wet runway accelerate-stop distance is the ratio of the instantaneous brake force integral to the peak brake force integral:

$$\eta = \frac{\int instantaneous\ brake\ force.ds}{\int peak\ brake\ force.ds}$$

where:

η = anti-skid efficiency; and

s = stopping distance

The stopping distance is defined as the distance travelled during the specific wet runway stopping demonstration, beginning when the full braking configuration is obtained and ending at the lowest speed at which anti-skid cycling occurs (i.e. the brakes are not torque limited), except that this speed need not be less than 19 km/h (10 kt). Any variation in the anti-skid efficiency with speed should also be investigated, which can be accomplished by determining the efficiency over segments of the total stopping distance. If significant variations are noted, this variation should be reflected in the braking force used to determine the accelerate-stop distances (either by using a variable efficiency or by using a conservative single value).

4.3 Wheel Slip Method

At brake application, the tyre begins to slip with respect to the runway surface, i.e. the wheel speed slows down with respect to the aeroplane's ground speed. As the amount of tyre slip increases, the brake force also increases until an optimal slip is reached. If the amount of slip continues to increase past the optimal slip, the braking force will decrease.

Using the wheel slip method, the anti-skid efficiency is determined by comparing the actual wheel slip measured during a wet runway stop to the optimal slip. Since the wheel slip varies significantly during the stop, sufficient wheel and ground speed data must be obtained to determine the variation of both the actual wheel slip and the optimal wheel slip over the length of the stop. A sampling rate of at least 16 samples per second for both wheel speed and ground speed has been found to yield acceptable fidelity.

For each wheel and ground speed data point, the instantaneous anti-skid efficiency value should be determined from the relationship shown in Figure 5:

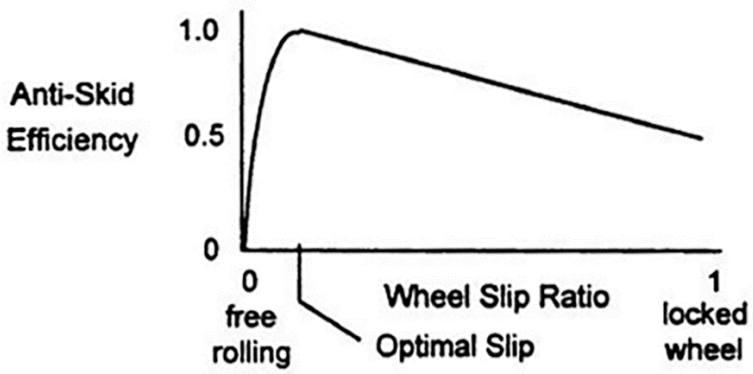

FIGURE 5. ANTI-SKID EFFICIENCY – WHEEL SLIP RELATIONSHIP

WSR = wheel slip ratio = $1 - \left(\frac{\text{wheel speed}}{\text{ground speed}}\right)$

OPS = optimal slip ratio; and

η_i = instantaneous anti-skid efficiency

To determine the overall anti-skid efficiency value for use in calculating the wet runway accelerate-stop distance, the instantaneous anti-skid efficiencies should be integrated with respect to distance and divided by the total stopping distance:

$$\eta = \frac{\int \eta_i . ds}{s}$$

where:

η = anti-skid efficiency; and

s = stopping distance

The stopping distance is defined as the distance travelled during the specific wet runway stopping demonstration, beginning when the full braking configuration is obtained and ending at the lowest speed at which anti-skid cycling occurs (i.e. the brakes are not torque limited), except that this speed need not be less than 19 km/h (10 kt). Any variation in the anti-skid efficiency with speed should also be investigated, which can be accomplished by determining the efficiency over segments of the total stopping distance. If significant variations are noted, this variation should be reflected in the braking force used to determine the accelerate-stop distances (either by using a variable efficiency or by using a conservative single value).

The applicant should provide substantiation of the optimal wheel slip value(s) used to determine the anti-skid efficiency value. An acceptable method for determining the optimal slip value(s) is to compare time history plots of the brake force and wheel slip data obtained during the wet runway stopping tests. For brake installations where measuring brake force directly is impractical, brake force may be determined from other parameters (e.g. brake pressure) if a suitable correlation is available. For those skids where wheel slip continues to increase after a reduction in the brake force, the optimal slip is the value corresponding to the brake force peak. See Figure 6 for an example and note how both the actual wheel slip and the optimal wheel slip can vary during the stop.

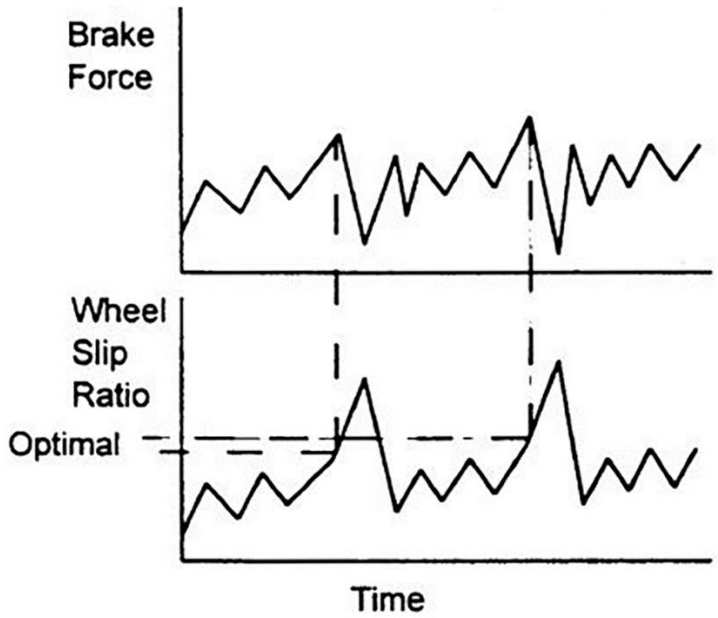

FIGURE 6. SUBSTANTIATION OF THE OPTIMAL SLIP VALUE

4.4 For dispatch with an inoperative anti-skid system (if approved), the wet runway acceleratestop distances should be based on an efficiency no higher than that allowed by CS 25.109(c)(2) for an on-off type of anti-skid system. The safety of this type of operation should be demonstrated by flight tests conducted in accordance with Paragraph 2 of this AMC.

5 *Distribution of normal load between braked and unbraked wheels*

In addition to taking into account the efficiency of the anti-skid system, CS 25.109(b)(2)(ii) also requires adjusting the braking force for the effect of the distribution of the normal load between braked and unbraked wheels at the most adverse centre of gravity position approved for take-off. The stopping force due to braking is equal to the braking coefficient multiplied by the normal load (i.e. weight) on each braked wheel. The portion of the aeroplane's weight being supported by the unbraked wheels (e.g. unbraked nose wheels) does not contribute to the stopping force generated by the brakes. This effect must be taken into account for the most adverse centre of gravity position approved for take-off, considering any centre of gravity shifts that occur due to the dynamics of the stop. The most adverse centre of gravity position is the position that results in the least load on the braked wheels.

AMC 25.109(d)(2) Accelerate-stop distance: anti-skid efficiency on grooved and porous friction course (PFC) runways.

ED Decision 2003/2/RM

Properly designed, constructed and maintained grooved and PFC runways can offer significant improvements in wet runway braking capability. A conservative level of performance credit is provided by 25.109(d) to reflect this performance improvement and to provide an incentive for installing and maintaining such surfaces.

In accordance with CS 25.105(c) and 25.109(d), applicants may optionally determine the acceleratestop distance applicable to wet grooved and PFC runways. These data would be included in the AFM in addition to the smooth runway accelerate-stop distance data. The braking coefficient for determining the accelerate-stop distance on grooved and PFC runways is defined in CS 25.109(d) as either 70% of the braking coefficient used to determine the dry runway accelerate-stop distances, or a curve based on ESDU 71026 data and derived in a manner consistent with that used for smooth runways. In either case, the brake torque limitations determined on a dry runway may not be exceeded.

Using a simple factor applied to the dry runway braking coefficient is acceptable for grooved and PFC runways because the braking coefficient's variation with speed is much lower on these types of runways. On smooth wet runways, the braking coefficient varies significantly with speed, which makes it inappropriate to apply a simple factor to the dry runway braking coefficient. For applicants who choose to determine the grooved/PFC wet runway accelerate-stop distances in a manner consistent with that used for smooth runways, CS 25.109(d)(2) provides the maximum tyre-to-ground braking coefficient applicable to grooved and PFC runways. This maximum tyre-to-ground braking coefficient must be adjusted for the anti-skid system efficiency, either by using the value specified in CS 25.109(c)(2) appropriate to the type of anti-skid system installed, or by using a specific efficiency established by the applicant. As anti-skid system performance depends on the characteristics of the runway surface, a system that has been tuned for optimum performance on a smooth surface may not achieve the same level of efficiency on a grooved or porous friction course runway, and vice versa. Consequently, if the applicant elects to establish a specific efficiency for use with grooved or PFC surfaces, anti-skid efficiency testing should be conducted on a wet runway with such a surface, in addition to testing on a smooth runway. Means other than flight testing may be acceptable, such as

using the efficiency previously determined for smooth wet runways, if that efficiency is shown to be representative of, or conservative for, grooved and PFC runways. The resulting braking force for grooved/PFC wet runways must be adjusted for the effect of the distribution of the normal load between braked and unbraked wheels. This adjustment will be similar to that used for determining the braking force for smooth runways, except that the braking dynamics should be appropriate to the braking force achieved on grooved and PFC wet runways. Due to the increased braking force on grooved and PFC wet runways, an increased download on the nose wheel and corresponding reduction in the download on the main gear is expected.

AMC 25.109(f) Accelerate-stop distance: credit for reverse thrust.

ED Decision 2003/2/RM

In accordance with CS 25.109(f), reverse thrust may not be used to determine the accelerate-stop distances for a dry runway. For wet runway accelerate-stop distances, however, CS 25.109(f) allows credit for the stopping force provided by reverse thrust, if the requirements of CS 25.109(e) are met. In addition, the procedures associated with the use of reverse thrust, which CS 25.101(f) requires the applicant to provide, must meet the requirements of CS 25.101(h). The following criteria provide acceptable means of demonstrating compliance with these requirements:

1 Procedures for using reverse thrust during a rejected take-off must be developed and demonstrated. These procedures should include all of the pilot actions necessary to obtain the recommended level of reverse thrust, maintain directional control and safe engine operating characteristics, and return the reverser(s), as applicable, to either the idle or the stowed position. These procedures need not be the same as those recommended for use during a landing stop, but must not result in additional hazards, (e.g., cause a flame out or any adverse engine operating characteristics), nor may they significantly increase flightcrew workload or training needs.

2 It should be demonstrated that using reverse thrust during a rejected take-off complies with the engine operating characteristics requirements of CS 25.939(a). No adverse engine operating characteristics should be exhibited. The reverse thrust procedures may specify a speed at which the reverse thrust is to be reduced to idle in order to maintain safe engine operating characteristics.

3 The time sequence for the actions necessary to obtain the recommended level of reverse thrust should be demonstrated by flight test. The time sequence used to determine the accelerate-stop distances should reflect the most critical case relative to the time needed to deploy the thrust reversers. For example, on some aeroplanes the outboard thrust reversers are locked out if an outboard engine fails. This safety feature prevents the pilot from applying asymmetric reverse thrust on the outboard engines, but it may also delay the pilot's selection of reverse thrust on the operable reversers. In addition, if the selection of reverse thrust is the fourth or subsequent pilot action to stop the aeroplane (e.g., after manual brake application, thrust/power reduction, and spoiler deployment), a one second delay should be added to the demonstrated time to select reverse thrust. (See figure 1 of AMC 25.101(h)(3).)

4 The response times of the affected aeroplane systems to pilot inputs should be taken into account. For example, delays in system operation, such as thrust reverser interlocks that prevent the pilot from applying reverse thrust until the reverser is deployed, should be taken into account. The effects of transient response characteristics, such as reverse thrust engine spin-up, should also be included.

5 To enable a pilot of average skill to consistently obtain the recommended level of reverse thrust under typical in-service conditions, a lever position that incorporates tactile feedback (e.g., a

detent or stop) should be provided. If tactile feedback is not provided, a conservative level of reverse thrust should be assumed.

6 The applicant should demonstrate that exceptional skill is not required to maintain directional control on a wet runway with a 19 km/h (ten knot) crosswind from the most adverse direction. For demonstration purposes, a wet runway may be simulated by using a castering nosewheel on a dry runway. Symmetric braking should be used during the demonstration, and both all-engines-operating and critical-engine-inoperative reverse thrust should be considered. The brakes and thrust reversers may not be modulated to maintain directional control. The reverse thrust procedures may specify a speed at which the reverse thrust is reduced to idle in order to maintain directional controllability.

7 To meet the requirements of CS 25.101(h)(2) and 25.109(e)(1) the probability of failure to provide the recommended level of reverse thrust should be no greater than 1 per 1000 selections. The effects of any system or component malfunction or failure should not create an additional hazard.

8 The number of thrust reversers used to determine the wet runway accelerate-stop distance data provided in the AFM should reflect the number of engines assumed to be operating during the rejected take-off along with any applicable system design features. The all-engines-operating accelerate-stop distances should be based on all thrust reversers operating. The one-engine-inoperative accelerate-stop distances should be based on failure of the critical engine. For example, if the outboard thrust reversers are locked out when an outboard engine fails, the one-engine-inoperative accelerate stop distances can only include reverse thrust from the inboard engine thrust reversers.

9 For the engine failure case, it should be assumed that the thrust reverser does not deploy (i.e., no reverse thrust or drag credit for deployed thrust reverser buckets on the failed engine).

10 For approval of dispatch with one or more inoperative thrust reverser(s), the associated performance information should be provided either in the Aeroplane Flight Manual or the Master Minimum Equipment List.

11 The effective stopping force provided by reverse thrust in each, or at the option of the applicant, the most critical take-off configuration, should be demonstrated by flight test. Flight test demonstrations should be conducted to substantiate the accelerate-stop distances, and should include the combined use of all the approved means for stopping the aeroplane. These demonstrations may be conducted on a dry runway.

12 For turbo-propeller powered aeroplanes, the criteria of paragraphs 1 to 11 above remain generally applicable. Additionally, the propeller of the inoperative engine should be in the position it would normally assume when an engine fails and the power lever is closed. Reverse thrust may be selected on the remaining engine(s). Unless this is achieved by a single action to retard the power lever(s) from the take-off setting without encountering a stop or lockout, it must be regarded as an additional pilot action for the purposes of assessing delay times. If this is the fourth or subsequent pilot action to stop the aeroplane, a one second delay should be added to the demonstrated time to select reverse thrust.

CS 25.111 Take-off path

ED Decision 2003/2/RM

(a) The take-off path extends from a standing start to a point in the take-off at which the aeroplane is 457 m (1500 ft) above the take-off surface, or at which the transition from the take-off to the en-route configuration is completed and V_{FTO} is reached, whichever point is higher. In addition –

(1) The take-off path must be based on the procedures prescribed in CS 25.101(f);

(2) The aeroplane must be accelerated on the ground to V_{EF}, at which point the critical engine must be made inoperative and remain inoperative for the rest of the take-off; and

(3) After reaching V_{EF}, the aeroplane must be accelerated to V_2.

(b) During the acceleration to speed V_2, the nose gear may be raised off the ground at a speed not less than V_R. However, landing gear retraction may not be begun until the aeroplane is airborne. (See AMC 25.111(b).)

(c) During the take-off path determination in accordance with sub-paragraphs (a) and (b) of this paragraph –

(1) The slope of the airborne part of the take-off path must be positive at each point;

(2) The aeroplane must reach V_2 before it is 11 m (35 ft) above the take-off surface and must continue at a speed as close as practical to, but not less than V_2 until it is 122 m (400 ft) above the take-off surface;

(3) At each point along the take-off path, starting at the point at which the aeroplane reaches 122 m (400 ft) above the take-off surface, the available gradient of climb may not be less than –

(i) 1·2% for two-engined aeroplanes;

(ii) 1·5% for three-engined aeroplanes; and

(iii) 1·7% for four-engined aeroplanes, and

(4) Except for gear retraction and automatic propeller feathering, the aeroplane configuration may not be changed, and no change in power or thrust that requires action by the pilot may be made, until the aeroplane is 122 m (400 ft) above the take-off surface.

(d) The take-off path must be determined by a continuous demonstrated take-off or by synthesis from segments. If the take-off path is determined by the segmental method –

(1) The segments must be clearly defined and must relate to the distinct changes in the configuration, power or thrust, and speed;

(2) The weight of the aeroplane, the configuration, and the power or thrust must be constant throughout each segment and must correspond to the most critical condition prevailing in the segment;

(3) The flight path must be based on the aeroplane's performance without ground effect; and

(4) The take-off path data must be checked by continuous demonstrated take-offs up to the point at which the aeroplane is out of ground effect and its speed is stabilised, to ensure that the path is conservative to the continuous path.

The aeroplane is considered to be out of the ground effect when it reaches a height equal to its wing span.

(e) Not required for CS-25.

AMC 25.111 Take-off path

ED Decision 2003/2/RM

The height references in CS 25.111 should be interpreted as geometrical heights.

AMC 25.111(b) Take-off path

ED Decision 2003/2/RM

1 Rotation speed, V_R, is intended to be the speed at which the pilot initiates action to raise the nose gear off the ground, during the acceleration to V_2; consequently, the take-off path determination, in accordance with CS 25.111(a) and (b), should assume that pilot action to raise the nose gear off the ground will not be initiated until the speed V_R has been reached.

2 The time between lift-off and the initiation of gear retraction during take-off distance demonstrations should not be less than that necessary to establish an indicated positive rate of climb plus one second. For the purposes of flight manual expansion, the average demonstrated time delay between lift-off and initiation of gear retraction may be assumed; however, this value should not be less than 3 seconds.

CS 25.113 Take-off distance and take-off run

ED Decision 2003/2/RM

(a) Take-off distance on a dry runway is the greater of –

(1) The horizontal distance along the take-off path from the start of the take-off to the point at which the aeroplane is 11 m (35 ft) above the take-off surface, determined under CS 25.111 for a dry runway; or

(2) 115% of the horizontal distance along the take-off path, with all engines operating, from the start of the take-off to the point at which the aeroplane is 11 m (35 ft) above the take-off surface, as determined by a procedure consistent with CS 25.111. (See AMC 25.113(a)(2), (b)(2) and (c)(2).)

(b) Take-off distance on a wet runway is the greater of –

(1) The take-off distance on a dry runway determined in accordance with sub-paragraph (a) of this paragraph; or

(2) The horizontal distance along the take-off path from the start of the take-off to the point at which the aeroplane is 4,6 m (15 ft) above the take-off surface, achieved in a manner consistent with the achievement of V_2 before reaching 11 m (35 ft) above the take-off surface, determined under CS 25.111 for a wet runway. (See AMC 113(a)(2), (b)(2) and (c)(2).)

(c) If the take-off distance does not include a clearway, the take-off run is equal to the take-off distance. If the take-off distance includes a clearway –

(1) The take-off run on a dry runway is the greater of –

(i) The horizontal distance along the take-off path from the start of the takeoff to a point equidistant between the point at which V_{LOF} is reached and the point at which the aeroplane is 11 m (35 ft) above the take-off surface, as determined under CS 25.111 for a dry runway; or

(ii) 115% of the horizontal distance along the take-off path, with all engines operating, from the start of the take-off to a point equidistant between the point at which VLOF is reached and the point at which the aeroplane is 11 m (35 ft) above the take-off surface, determined by a procedure consistent with CS25.111. (See AMC 25.113(a)(2), (b)(2) and (c)(2).)

(2) The take-off run on a wet runway is the greater of –

(i) The horizontal distance along the take-off path from the start of the takeoff to the point at which the aeroplane is 4,6 m (15 ft) above the take-off surface, achieved in a manner consistent with the achievement of V_2 before reaching 11 m (35 ft) above the take-off surface, determined under CS 25.111 for a wet runway; or

(ii) 115% of the horizontal distance along the take-off path, with all engines operating, from the start of the take-off to a point equidistant between the point at which V_{LOF} is reached and the point at which the aeroplane is 11 m (35 ft) above the take-off surface, determined by a procedure consistent with CS 25.111. (See AMC 25.113(a)(2).)

AMC 25.113(a)(2), (b)(2) and (c)(2) Take-off distance and take-off run

ED Decision 2003/2/RM

In establishment of the take-off distance and take-off run, with all engines operating, in accordance with CS 25.113(a), (b) and (c), the flight technique should be such that –

a. A speed of not less than V_2 is achieved before reaching a height of 11 m (35 ft) above the take-off surface,

b. It is consistent with the achievement of a smooth transition to a steady initial climb speed of not less than V_2 + 19 km/h (10 kt) at a height of 122 m (400 ft) above the take-off surface.

CS 25.115 Take-off flight path

ED Decision 2003/2/RM

(a) The take-off flight path must be considered to begin 11 m (35 ft) above the take-off surface at the end of the take-off distance determined in accordance with CS 25.113(a) or (b) as appropriate for the runway surface condition.

(b) The net take-off flight path data must be determined so that they represent the actual take-off flight paths (determined in accordance with CS 25.111 and with sub-paragraph (a) of this paragraph) reduced at each point by a gradient of climb equal to –

(1) 0·8% for two-engined aeroplanes;

(2) 0·9% for three-engined aeroplanes; and

(3) 1·0% for four-engined aeroplanes.

(c) The prescribed reduction in climb gradient may be applied as an equivalent reduction in acceleration along that part of the take-off flight path at which the aeroplane is accelerated in level flight.

CS 25.117 Climb: general

ED Decision 2003/2/RM

Compliance with the requirements of CS 25.119 and 25.121 must be shown at each weight, altitude, and ambient temperature within the operational limits established for the aeroplane and with the most unfavourable centre of gravity for each configuration.

CS 25.119 Landing climb: all-engines-operating

ED Decision 2003/2/RM

In the landing configuration, the steady gradient of climb may not be less than 3·2%, with –

(a) The engines at the power or thrust that is available 8 seconds after initiation of movement of the power or thrust controls from the minimum flight idle to the go-around power or thrust setting (see AMC 25.119(a)); and

(b) A climb speed which is –

(1) Not less than –

(i) 1·08 V_{SR} for aeroplanes with four engines on which the application of power results in a significant reduction in stall speed; or

(ii) 1·13 V_{SR} for all other aeroplanes;

(2) Not less than V_{MCL}; and

(3) Not greater than V_{REF}.

AMC 25.119(a) Landing climb: all-engines-operating

ED Decision 2003/2/RM

In establishing the thrust specified in CS 25.119(a), either –

a. Engine acceleration tests should be conducted using the most critical combination of the following parameters:

i. Altitude;

ii. Airspeed;

iii. Engine bleed;

iv. Engine power off-take;

likely to be encountered during an approach to a landing airfield within the altitude range for which landing certification is sought; or

b. The thrust specified in CS 25.119(a) should be established as a function of these parameters.

CS 25.121 Climb: one-engine-inoperative

ED Decision 2003/2/RM

(a) *Take-off; landing gear extended.* (See AMC 25.121(a).) In the critical take-off configuration existing along the flight path (between the points at which the aeroplane reaches V_{LOF} and at which the landing gear is fully retracted) and in the configuration used in CS 25.111 but without ground effect, the steady gradient of climb must be positive for two-engined aeroplanes, and not less than 0·3% for three-engined aeroplanes or 0·5% for fourengined aeroplanes, at V_{LOF} and with –

(1) The critical engine inoperative and the remaining engines at the power or thrust available when retraction of the landing gear is begun in accordance with CS 25.111 unless there is a more critical power operating condition existing later along the flight path but before the point at which the landing gear is fully retracted (see AMC 25.121(a)(1)); and

(2) The weight equal to the weight existing when retraction of the landing gear is begun determined under CS 25.111.

(b) *Take-off; landing gear retracted.* In the take-off configuration existing at the point of the flight path at which the landing gear is fully retracted, and in the configuration used in CS 25.111 but without ground effect, the steady gradient of climb may not be less than 2·4% for two-engined aeroplanes, 2·7% for three-engined aeroplanes and 3·0% for four-engined aeroplanes, at V_2 and with –

(1) The critical engine inoperative, the remaining engines at the take-off power or thrust available at the time the landing gear is fully retracted, determined under CS 25.111, unless there is a more critical power operating condition existing later along the flight path but before the point where the aeroplane reaches a height of 122 m (400 ft) above the take-off surface (see AMC 25.121(b)(1)) ; and

(2) The weight equal to the weight existing when the aeroplane's landing gear is fully retracted, determined under CS 25.111.

(c) *Final take-off.* In the en-route configuration at the end of the take-off path determined in accordance with CS 25.111, the steady gradient of climb may not be less than 1·2% for two-engined aeroplanes, 1·5% for three-engined aeroplanes, and 1·7% for four-engined aeroplanes, at V_{FTO} and with –

(1) The critical engine inoperative and the remaining engines at the available maximum continuous power or thrust; and

(2) The weight equal to the weight existing at the end of the take-off path, determined under CS 25.111.

(d) *Approach.* In a configuration corresponding to the normal all-engines-operating procedure in which V_{SR} for this configuration does not exceed 110% of the V_{SR} for the related all-engines-operating landing configuration, the steady gradient of climb may not be less than 2·1% for two-engined aeroplanes, 2·4% for three-engined aeroplanes and 2·7% for four-engined aeroplanes, with –

(1) The critical engine inoperative, the remaining engines at the go-around power or thrust setting;

(2) The maximum landing weight;

(3) A climb speed established in connection with normal landing procedures, but not more than 1·4 V_{SR}; and

(4) Landing gear retracted.

AMC 25.121 Climb: One-engine-inoperative

ED Decision 2003/2/RM

1 In showing compliance with CS 25.121 it is accepted that bank angles of up to 2° to 3° toward the operating engine(s) may be used.

2 The height references in CS 25.121 should be interpreted as geometrical heights.

AMC 25.121(a) Climb: One-engine-inoperative

ED Decision 2003/2/RM

The configuration of the landing gear used in showing compliance with the climb requirements ofCS 25.121(a) may be that finally achieved following 'gear down' selection.

AMC 25.121(a)(1) Climb: One-engine-inoperative

ED Decision 2003/2/RM

A 'power operating condition' more critical than that existing at the time when retraction of the landing gear is begun would occur, for example, if water injection were discontinued prior to reaching the point at which the landing gear is fully retracted.

AMC 25.121(b)(1) Climb: One-engine-inoperative

ED Decision 2003/2/RM

A 'power operating condition' more critical than that existing at the time the landing gear is fully retracted would occur, for example, if water injection were discontinued prior to reaching a gross height of 122 m (400 ft).

CS 25.123 En-route flight paths

ED Decision 2003/2/RM

(a) For the en-route configuration, the flight paths prescribed in sub-paragraphs (b) and (c) of this paragraph must be determined at each weight, altitude, and ambient temperature, within the operating limits established for the aeroplane. The variation of weight along the flight path, accounting for the progressive consumption of fuel and oil by the operating engines, may be included in the computation. The flight paths must be determined at any selected speed, with –

(1) The most unfavourable centre of gravity;

(2) The critical engines inoperative;

(3) The remaining engines at the available maximum continuous power or thrust; and

(4) The means for controlling the engine-cooling air supply in the position that provides adequate cooling in the hot-day condition.

(b) The one-engine-inoperative net flight path data must represent the actual climb performance diminished by a gradient of climb of 1·1% for two-engined aeroplanes, 1·4% for three-engined aeroplanes, and 1·6% for four-engined aeroplanes.

(c) For three- or four-engined aeroplanes, the two-engine-inoperative net flight path data must represent the actual climb performance diminished by a gradient climb of 0·3% for three-engined aeroplanes and 0·5% for four-engined aeroplanes.

AMC 25.123 En-route flight paths

ED Decision 2003/2/RM

If, in showing compliance with CS 25.123, any credit is to be taken for the progressive use of fuel by the operating engines, the fuel flow rate should be assumed to be 80% of the engine specification flow rate at maximum continuous power, unless a more appropriate figure has been substantiated by flight tests.

CS 25.125 Landing

ED Decision 2003/2/RM

(a) The horizontal distance necessary to land and to come to a complete stop from a point 15 m (50 ft) above the landing surface must be determined (for standard temperatures, at each weight, altitude and wind within the operational limits established by the applicant for the aeroplane) as follows:

(1) The aeroplane must be in the landing configuration.

(2) A stabilised approach, with a calibrated airspeed of V_{REF}, must be maintained down to the 15 m (50 ft) height. V_{REF} may not be less than –

(i) 1.23 V_{SR0};

(ii) V_{MCL} established under CS25.149(f); and

(iii) A speed that provides the manoeuvring capability specified in CS25.143(g).

(3) Changes in configuration, power or thrust, and speed, must be made in accordance with the established procedures for service operation. (See AMC 25.125(a)(3).)

(4) The landing must be made without excessive vertical acceleration, tendency to bounce, nose over or ground loop.

(5) The landings may not require exceptional piloting skill or alertness.

(b) The landing distance must be determined on a level, smooth, dry, hard-surfaced runway. (See AMC 25.125(b).) In addition –

(1) The pressures on the wheel braking systems may not exceed those specified by the brake manufacturer;

(2) The brakes may not be used so as to cause excessive wear of brakes or tyres (see AMC 25.125(b)(2)); and

(3) Means other than wheel brakes may be used if that means –

(i) Is safe and reliable;

(ii) Is used so that consistent results can be expected in service; and

(iii) Is such that exceptional skill is not required to control the aeroplane.

(c) Not required for CS-25.

(d) Not required for CS-25.

(e) The landing distance data must include correction factors for not more than 50% of the nominal wind components along the landing path opposite to the direction of landing, and not less than 150% of the nominal wind components along the landing path in the direction of landing.

(f) If any device is used that depends on the operation of any engine, and if the landing distance would be noticeably increased when a landing is made with that engine inoperative, the landing distance must be determined with that engine inoperative unless the use of compensating means will result in a landing distance not more than that with each engine operating.

AMC 25.125(a)(3) Change of Configuration

ED Decision 2003/2/RM

No changes in configuration, addition of thrust, or nose depression should be made after reaching 15 m (50 ft) height.

AMC 25.125(b) Landing

ED Decision 2003/2/RM

1 During measured landings, if the brakes can be consistently applied in a manner permitting the nose gear to touch down safely, the brakes may be applied with only the main wheels firmly on the ground. Otherwise, the brakes should not be applied until all wheels are firmly on the ground.

2 This is not intended to prevent operation in the normal way of automatic braking systems which, for instance, permit brakes to be selected on before touchdown.

AMC 25.125(b)(2) Landing

ED Decision 2003/2/RM

To ensure compliance with CS 25.125(b)(2), a series of six measured landings should be conducted on the same set of wheel brakes and tyres.

CONTROLLABILITY AND MANOEUVRABILITY

CS 25.143 General

ED Decision 2003/2/RM

(a) (See AMC 25.143(a).) The aeroplane must be safely controllable and manoeuvrable during –

(1) Take-off;

(2) Climb;

(3) Level flight;

(4) Descent; and

(5) Landing.

(b) (See AMC 25.143(b).) It must be possible to make a smooth transition from one flight condition to any other flight condition without exceptional piloting skill, alertness, or strength, and without danger of exceeding the aeroplane limit-load factor under any probable operating conditions, including –

(1) The sudden failure of the critical engine. (See AMC 25.143(b)(1).)

(2) For aeroplanes with three or more engines, the sudden failure of the second critical engine when the aeroplane is in the en-route, approach, or landing configuration and is trimmed with the critical engine inoperative; and

(3) Configuration changes, including deployment or retraction of deceleration devices.

(c) The following table prescribes, for conventional wheel type controls, the maximum control forces permitted during the testing required by sub-paragraphs (a) and (b) of this paragraph. (See AMC 25.143(c)):

Force, in newton (pounds), applied to the control wheel or rudder pedals	Pitch	Roll	Yaw
For short term application for pitch and roll control – two hands available for control	334 (75)	222 (50)	–
For short term application for pitch and roll control – one hand available for control	222 (50)	111 (25)	–
For short term application for yaw control	–	–	667 (150)
For long term application	44,5 (10)	22 (5)	89 (20)

(d) Approved operating procedures or conventional operating practices must be followed when demonstrating compliance with the control force limitations for short term application that are prescribed in sub-paragraph (c) of this paragraph. The aeroplane must be in trim, or as near to being in trim as practical, in the immediately preceding steady flight condition. For the take-off condition, the aeroplane must be trimmed according to the approved operating procedures.

(e) When demonstrating compliance with the control force limitations for long term application that are prescribed in sub-paragraph (c) of this paragraph, the aeroplane must be in trim, or as near to being in trim as practical.

(f) When manoeuvring at a constant airspeed or Mach number (up to V_{FC}/M_{FC}), the stick forces and the gradient of the stick force versus manoeuvring load factor must lie within satisfactory limits. The stick forces must not be so great as to make excessive demands on the pilot's strength when

manoeuvring the aeroplane (see AMC No. 1 to CS 25.143(f)), and must not be so low that the aeroplane can easily be overstressed inadvertently. Changes of gradient that occur with changes of load factor must not cause undue difficulty in maintaining control of the aeroplane, and local gradients must not be so low as to result in a danger of over-controlling. (See AMC No. 2 to CS 25.143(f)).

(g) (See AMC 25.143(g)). The manoeuvring capabilities in a constant speed coordinated turn at forward centre of gravity, as specified in the following table, must be free of stall warning or other characteristics that might interfere with normal manoeuvring.

CONFIGURATION	SPEED	MANOEUVRING BANK ANGLE IN A COORDINATED TURN	THRUST/POWER SETTING
TAKE-OFF	V_2	30°	ASYMMETRIC WAT-LIMITED (1)
TAKE-OFF	V_2 + xx (2)	40°	ALL ENGINES OPERATING CLIMB (3)
EN-ROUTE	V_{FTO}	40°	ASYMMETRIC WAT-LIMITED (1)
LANDING	V_{REF}	40°	SYMMETRIC FOR –3° FLIGHT PATH ANGLE

(1) A combination of weight, altitude and temperature (WAT) such that the thrust or power setting produces the minimum climb gradient specified in CS 25.121 for the flight condition.

(2) Airspeed approved for all-engines-operating initial climb.

(3) That thrust or power setting which, in the event of failure of the critical engine and without any crew action to adjust the thrust or power of the remaining engines, would result in the thrust or power specified for the take-off condition at V_2, or any lesser thrust or power setting that is used for all-engines-operating initial climb procedures.

AMC 25.143(a) and (b) Controllability and Manoeuvrability

ED Decision 2003/2/RM

In showing compliance with the requirements of CS 25.143(a) and (b) account should be taken of aeroelastic effects and structural dynamics (including aeroplane response to rough runways and water waves) which may influence the aeroplane handling qualities in flight and on the surface. The oscillation characteristics of the flightdeck, in likely atmospheric conditions, should be such that there is no reduction in ability to control and manoeuvre the aeroplane safely.

AMC 25.143(b)(1) Control Following Engine Failure

ED Decision 2003/2/RM

1 An acceptable means of showing compliance with CS 25.143(b)(1) is to demonstrate that it is possible to regain full control of the aeroplane without attaining a dangerous flight condition in the event of a sudden and complete failure of the critical engine in the following conditions:

a. At each take-off flap setting at the lowest speed recommended for initial steady climb with all engines operating after take-off, with –

i. All engines, prior to the critical engine becoming inoperative, at maximum take-off power or thrust;

ii. All propeller controls in the take-off position;

iii. The landing gear retracted;

iv. The aeroplane in trim in the prescribed initial conditions; and

b. With wing-flaps retracted at a speed of 1.23 V_{SR1} with –

i. All engines, prior to the critical engine becoming inoperative, at maximum continuous power or thrust;

ii. All propeller controls in the en-route position;

iii. The landing gear retracted;

iv. The aeroplane in trim in the prescribed initial conditions.

2 The demonstrations should be made with simulated engine failure occurring during straight flight with wings level. In order to allow for likely delay in the initiation of recovery action, no action to recover the aeroplane should be taken for 2 seconds following engine failure. The recovery action should not necessitate movement of the engine, propeller or trimming controls, nor require excessive control forces. The aeroplane will be considered to have reached an unacceptable attitude if a bank angle of 45° is exceeded during recovery.

AMC 25.143(c) Controllability and Manoeuvrability

ED Decision 2003/2/RM

1 The maximum forces given in the table in CS 25.143(c) for pitch and roll control for short term application are applicable to manoeuvres in which the control force is only needed for a short period. Where the manoeuvre is such that the pilot will need to use one hand to operate other controls (such as the landing flare or go-around, or during changes of configuration or power resulting in a change of control force that must be trimmed out) the single-handed maximum control forces will be applicable. In other cases (such as take-off rotation, or manoeuvring during en-route flight) the two handed maximum forces will apply.

2 Short term and long term forces should be interpreted as follows:–

Short term forces are the initial stabilised control forces that result from maintaining the intended flight path during configuration changes and normal transitions from one flight condition to another, or from regaining control following a failure. It is assumed that the pilot will take immediate action to reduce or eliminate such forces by re-trimming or changing configuration or flight conditions, and consequently short term forces are not considered to exist for any significant duration. They do not include transient force peaks that may occur during the configuration change, change of flight condition or recovery of control following a failure.

Long term forces are those control forces that result from normal or failure conditions that cannot readily be trimmed out or eliminated.

AMC No. 1 to CS 25.143(f) Controllability and Manoeuvrability

ED Decision 2003/2/RM

An acceptable means of compliance with the requirement that stick forces may not be excessive when manoeuvring the aeroplane, is to demonstrate that, in a turn for 0·5g incremental normal acceleration (0·3g above 6096 m (20 000 ft)) at speeds up to V_{FC}/M_{FC}, the average stick force gradient does not exceed 534 N (120 lbf)/g.

AMC No. 2 to CS 25.143(f) Controllability and Manoeuvrability

ED Decision 2003/2/RM

1 The objective of CS 25.143(f) is to ensure that the limit strength of any critical component on the aeroplane would not be exceeded in manoeuvring flight. In much of the structure the load sustained in manoeuvring flight can be assumed to be directly proportional to the load factor applied. However, this may not be the case for some parts of the structure, e.g., the tail and rear fuselage. Nevertheless, it is accepted that the aeroplane load factor will be a sufficient guide to the possibility of exceeding limit strength on any critical component if a structural investigation is undertaken whenever the design positive limit manoeuvring load factor is closely approached. If flight testing indicates that the design positive limit manoeuvring load factor could be exceeded in steady manoeuvring flight with a 222 N (50 lbf) stick force, the aeroplane structure should be evaluated for the anticipated load at a 222 N (50 lbf) stick force. The aeroplane will be considered to have been overstressed if limit strength has been exceeded in any critical component. For the purposes of this evaluation, limit strength is defined as the larger of either the limit design loads envelope increased by the available margins of safety, or the ultimate static test strength divided by 1·5.

2 *Minimum Stick Force to Reach Limit Strength*

2.1 A stick force of at least 222 N (50 lbf) to reach limit strength in steady manoeuvres or wind up turns is considered acceptable to demonstrate adequate minimum force at limit strength in the absence of deterrent buffeting. If heavy buffeting occurs before the limit strength condition is reached, a somewhat lower stick force at limit strength may be acceptable. The acceptability of a stick force of less than 222 N (50 lbf) at the limit strength condition will depend upon the intensity of the buffet, the adequacy of the warning margin (i.e., the load factor increment between the heavy buffet and the limit strength condition) and the stick force characteristics. In determining the limit strength condition for each critical component, the contribution of buffet loads to the overall manoeuvring loads should be taken into account.

2.2 This minimum stick force applies in the en-route configuration with the aeroplane trimmed for straight flight, at all speeds above the minimum speed at which the limit strength condition can be achieved without stalling. No minimum stick force is specified for other configurations, but the requirements of CS 25.143(f) are applicable in these conditions.

3 *Stick Force Characteristics*

3.1 At all points within the buffet onset boundary determined in accordance with CS 25.251(e), but not including speeds above V_{FC}/M_{FC}, the stick force should increase progressively with increasing load factor. Any reduction in stick force gradient with change of load factor should not be so large or abrupt as to impair significantly the ability of the pilot to maintain control over the load factor and pitch attitude of the aeroplane.

3.2 Beyond the buffet onset boundary, hazardous stick force characteristics should not be encountered within the permitted manoeuvring envelope as limited by paragraph 3.3. It should be possible, by use of the primary longitudinal control alone, to pitch the aeroplane rapidly nose down so as to regain the initial trimmed conditions. The stick force characteristics demonstrated should comply with the following:

a. For normal acceleration increments of up to 0·3 g beyond buffet onset, where these can be achieved, local reversal of the stick force gradient may be acceptable provided that any tendency to pitch up is mild and easily controllable.

b. For normal acceleration increments of more than 0·3 g beyond buffet onset, where these can be achieved, more marked reversals of the stick force gradient may be acceptable. It should be possible for any tendency to pitch up to be contained within the allowable manoeuvring limits without applying push forces to the control column and without making a large and rapid forward movement of the control column.

3.3 In flight tests to satisfy paragraph 3.1 and 3.2 the load factor should be increased until either –

a. The level of buffet becomes sufficient to provide a strong and effective deterrent to further increase of load factor; or

b. Further increase of load factor requires a stick force in excess of 667 N (150 lbf) (or in excess of 445 N (100 lbf) when beyond the buffet onset boundary) or is impossible because of the limitations of the control system; or

c. The positive limit manoeuvring load factor established in compliance with CS 25.337(b) is achieved.

4 *Negative Load Factors*

It is not intended that a detailed flight test assessment of the manoeuvring characteristics under negative load factors should necessarily be made throughout the specified range of conditions. An assessment of the characteristics in the normal flight envelope involving normal accelerations from 1 g to 0 g will normally be sufficient. Stick forces should also be assessed during other required flight testing involving negative load factors. Where these assessments reveal stick force gradients that are unusually low, or that are subject to significant variation, a more detailed assessment, in the most critical of the specified conditions, will be required. This may be based on calculations provided these are supported by adequate flight test or wind tunnel data.

AMC 25.143(g) Manoeuvre Capability

ED Decision 2003/2/RM

1 As an alternative to a detailed quantitative demonstration and analysis of coordinated turn capabilities, the levels of manoeuvrability free of stall warning required by CS 25.143(g) can normally be assumed where the scheduled operating speeds are not less than –

1.08 V_{SW} for V_2

1.16 V_{SW} for V_2 + xx, V_{FTO} and V_{REF}

where V_{SW} is the stall warning speed determined at idle power and at 1g in the same conditions of configuration, weight and centre of gravity, all expressed in CAS. Neverthless, a limited number of turning flight manoeuvres should be conducted to confirm qualitatively that the aeroplane does meet the manoeuvre bank angle objectives (e.g. for an aeroplane with a significant Mach effect on the C_L/α relationship) and does not exhibit other characteristics which might interfere with normal manoeuvring.

2 The effect of thrust or power is normally a function of thrust to weight ratio alone and, therefore, it is acceptable for flight test purposes to use the thrust or power setting that is consistent with a WAT-limited climb gradient at the test conditions of weight, altitude and temperature. However, if the manoeuvre margin to stall warning (or other relevant characteristic that might interfere with normal manoeuvring) is reduced with increasing thrust

or power, the critical conditions of both thrust or power and thrust-to-weight ratio must be taken into account when demonstrating the required manoeuvring capabilities.

CS 25.145 Longitudinal control

ED Decision 2003/2/RM

(a) (See AMC 25.145(a).) It must be possible at any point between the trim speed prescribed in CS 25.103(b)(6) and stall identification (as defined in CS 25.201(d)), to pitch the nose downward so that the acceleration to this selected trim speed is prompt with –

(1) The aeroplane trimmed at the trim speed prescribed in CS 25.103(b)(6);

(2) The landing gear extended;

(3) The wing-flaps (i) retracted and (ii) extended; and

(4) Power (i) off and (ii) at maximum continuous power on the engines.

(b) With the landing gear extended, no change in trim control, or exertion of more than 222 N (50 pounds) control force (representative of the maximum short term force that can be applied readily by one hand) may be required for the following manoeuvres:

(1) With power off, wing-flaps retracted, and the aeroplane trimmed at 1·3 V_{SR1}, extend the wing-flaps as rapidly as possible while maintaining the airspeed at approximately 30% above the reference stall speed existing at each instant throughout the manoeuvre. (See AMC 25.145(b)(1), (b)(2) and (b)(3).)

(2) Repeat sub-paragraph (b)(1) of this paragraph except initially extend the wing-flaps and then retract them as rapidly as possible. (See AMC 25.145(b)(2) and AMC 25.145(b)(1), (b)(2) and (b)(3).)

(3) Repeat sub-paragraph (b)(2) of this paragraph except at the go-around power or thrust setting. (See AMC 25.145(b)(1), (b)(2) and (b)(3).)

(4) With power off, wing-flaps retracted and the aeroplane trimmed at 1·3 V_{SR1}, rapidly set go-around power or thrust while maintaining the same airspeed.

(5) Repeat sub-paragraph (b)(4) of this paragraph except with wing-flaps extended.

(6) With power off, wing-flaps extended and the aeroplane trimmed at 1·3 V_{SR1} obtain and maintain airspeeds between V_{SW} and either 1·6 V_{SR1}, or V_{FE}, whichever is the lower.

(c) It must be possible, without exceptional piloting skill, to prevent loss of altitude when complete retraction of the high lift devices from any position is begun during steady, straight, level flight at 1·08 V_{SR1}, for propeller powered aeroplanes or 1·13 V_{SR1}, for turbo-jet powered aeroplanes, with –

(1) Simultaneous movement of the power or thrust controls to the go-around power or thrust setting;

(2) The landing gear extended; and

(3) The critical combinations of landing weights and altitudes.

(d) Revoked

(e) (See AMC 25.145(e).) If gated high-lift device control positions are provided, sub-paragraph (c) of this paragraph applies to retractions of the high-lift devices from any position from the maximum landing position to the first gated position, between gated positions, and from the

last gated position to the fully retracted position. The requirements of sub-paragraph (c) of this paragraph also apply to retractions from each approved landing position to the control position(s) associated with the high-lift device configuration(s) used to establish the go-around procedure(s) from that landing position. In addition, the first gated control position from the maximum landing position must correspond with a configuration of the high-lift devices used to establish a go-around procedure from a landing configuration. Each gated control position must require a separate and distinct motion of the control to pass through the gated position and must have features to prevent inadvertent movement of the control through the gated position. It must only be possible to make this separate and distinct motion once the control has reached the gated position.

AMC 25.145(a) Longitudinal control - Control near the stall

ED Decision 2003/2/RM

1 CS 25.145(a) requires that there be adequate longitudinal control to promptly pitch the aeroplane nose down from at or near the stall to return to the original trim speed. The intent is to ensure sufficient pitch control for a prompt recovery if the aeroplane is inadvertently slowed to the point of the stall. Although this requirement must be met with power off and at maximum continuous power, there is no intention to require stall demonstrations at engine powers above that specified in CS 25.201(a)(2). Instead of performing a full stall at maximum continuous power, compliance may be assessed by demonstrating sufficient static longitudinal stability and nose down control margin when the deceleration is ended at least one second past stall warning during a 0.5 m/s^2 (one knot per second) deceleration. The static longitudinal stability during the manoeuvre and the nose down control power remaining at the end of the manoeuvre must be sufficient to assure compliance with the requirement.

2 The aeroplane should be trimmed at the speed for each configuration as prescribed in CS 25.103(b)(6). The aeroplane should then be decelerated at 0.5 m/s^2 (1 knot per second) with wings level. For tests at idle power, it should be demonstrated that the nose can be pitched down from any speed between the trim speed and the stall. Typically, the most critical point is at the stall when in stall buffet. The rate of speed increase during the recovery should be adequate to promptly return to the trim point. Data from the stall characteristics test can be used to evaluate this capability at the stall. For tests at maximum continuous power, the manoeuvre need not be continued for more than one second beyond the onset of stall warning. However, the static longitudinal stability characteristics during the manoeuvre and the nose down control power remaining at the end of the manoeuvre must be sufficient to assure that a prompt recovery to the trim speed could be attained if the aeroplane is slowed to the point of stall.

AMC 25.145(b)(2) Longitudinal control

ED Decision 2003/2/RM

Where high lift devices are being retracted and where large and rapid changes in maximum lift occur as a result of movement of high-lift devices, some reduction in the margin above the stall may be accepted.

AMC 25.145(b)(1), (b)(2) and (b)(3) Longitudinal control

ED Decision 2003/2/RM

The presence of gated positions on the flap control does not affect the requirement to demonstrate full flap extensions and retractions without changing the trim control.

AMC 25.145(e) Longitudinal control

ED Decision 2003/2/RM

If gates are provided, CS 25.145(e) requires the first gate from the maximum landing position to be located at a position corresponding to a go-around configuration. If there are multiple go-around configurations, the following criteria should be considered when selecting the location of the gate:

a. The expected relative frequency of use of the available go-around configurations.

b. The effects of selecting the incorrect high-lift device control position.

c. The potential for the pilot to select the incorrect control position, considering the likely situations for use of the different go-around positions.

d. The extent to which the gate(s) aid the pilot in quickly and accurately selecting the correct position of the high-lift devices.

CS 25.147 Directional and lateral control

ED Decision 2003/2/RM

(a) *Directional control; general.* (See AMC 25.147(a).) It must be possible, with the wings level, to yaw into the operative engine and to safely make a reasonably sudden change in heading of up to 15° in the direction of the critical inoperative engine. This must be shown at 1·3 V_{SR1}, for heading changes up to 15° (except that the heading change at which the rudder pedal force is 667 N (150 lbf) need not be exceeded), and with –

(1) The critical engine inoperative and its propeller in the minimum drag position;

(2) The power required for level flight at 1.3 V_{SR1}, but not more than maximum continuous power;

(3) The most unfavourable centre of gravity;

(4) Landing gear retracted;

(5) Wing-flaps in the approach position; and

(6) Maximum landing weight.

(b) *Directional control; aeroplanes with four or more engines.* Aeroplanes with four or more engines must meet the requirements of sub-paragraph (a) of this paragraph except that –

(1) The two critical engines must be inoperative with their propellers (if applicable) in the minimum drag position;

(2) Reserved; and

(3) The wing-flaps must be in the most favourable climb position.

(c) *Lateral control; general.* It must be possible to make 20° banked turns, with and against the inoperative engine, from steady flight at a speed equal to 1·3 V_{SR1}, with –

(1) The critical engine inoperative and its propeller (if applicable) in the minimum drag position;

(2) The remaining engines at maximum continuous power;

(3) The most unfavourable centre of gravity;

(4) Landing gear both retracted and extended;

(5) Wing-flaps in the most favourable climb position; and

(6) Maximum take-off weight;

(d) Lateral control; roll capability. With the critical engine inoperative, roll response must allow normal manoeuvres. Lateral control must be sufficient, at the speeds likely to be used with one engine inoperative, to provide a roll rate necessary for safety without excessive control forces or travel. (See AMC 25.147(d).)

(e) *Lateral control; aeroplanes with four or more engines.* Aeroplanes with four or more engines must be able to make 20° banked turns, with and against the inoperative engines, from steady flight at a speed equal to 1·3 V_{SR1}, with maximum continuous power, and with the aeroplane in the configuration prescribed by sub-paragraph (b) of this paragraph.

(f) *Lateral control; all engines operating.* With the engines operating, roll response must allow normal manoeuvres (such as recovery from upsets produced by gusts and the initiation of evasive manoeuvres). There must be enough excess lateral control in sideslips (up to sideslip angles that might be required in normal operation), to allow a limited amount of manoeuvring and to correct for gusts. Lateral control must be enough at any speed up to V_{FC}/M_{FC} to provide a peak roll rate necessary for safety, without excessive control forces or travel. (See AMC 25.147(f).)

AMC 25.147(a) Directional control; general

ED Decision 2003/2/RM

The intention of the requirement is that the aircraft can be yawed as prescribed without the need for application of bank angle. Small variations of bank angle that are inevitable in a realistic flight test demonstration are acceptable.

AMC 25.147(d) Lateral control: Roll capability

ED Decision 2003/2/RM

An acceptable method of demonstrating compliance with CS 25.147(d) is as follows:

With the aeroplane in trim, all as nearly as possible,in trim, for straight flight at V_2, establish a steady 30° banked turn. It should be demonstrated that the aeroplane can be rolled to a 30° bank angle in the other direction in not more than 11 seconds. In this demonstration, the rudder may be used to the extent necessary to minimise sideslip. The demonstration should be made in the most adverse direction. The manoeuvre may be unchecked. Care should be taken to prevent excessive sideslip and bank angle during the recovery.

Conditions: Maximum take-off weight.

Most aft c.g. position.

Wing-flaps in the most critical take-off position.

Landing Gear retracted.

Yaw SAS on, and off, if applicable.

Operating engine(s) at maximum take-off power.

The inoperative engine that would be most critical for controllability, with the propeller (if applicable) feathered.

Note: Normal operation of a yaw stability augmentation system (SAS) should be considered in accordance with normal operating procedures.

AMC 25.147(f) Lateral control: All engines operating

ED Decision 2003/2/RM

An acceptable method of demonstrating that roll response and peak roll rates are adequate for compliance with CS 25.147(f) is as follows:

It should be possible in the conditions specified below to roll the aeroplane from a steady 30° banked turn through an angle of 60° so as to reverse the direction of the turn in not more than 7 seconds. In these demonstrations the rudder may be used to the extent necessary to minimise sideslip. The demonstrations should be made rolling the aeroplane in either direction, and the manoeuvres may be unchecked.

Conditions:

(a) En-route: Airspeed. All speeds between the minimum value of the scheduled all-engines-operating climb speed and V_{MO}/M_{MO}.

Wing-flaps. En-route position(s).

Air Brakes. All permitted settings from Retracted to Extended.

Landing Gear. Retracted.

Power. All engines operating at all powers from flight idle up to maximum continuous power.

Trim. The aeroplane should be in trim from straight flight in these conditions, and the trimming controls should not be moved during the manoeuvre.

(b) Approach: Airspeed. Either the speed maintained down to the 15 m (50 ft) height in compliance with CS 25.125(a)(2), or the target threshold speed determined in accordance with CS 25.125(c)(2)(i) as appropriate to the method of landing distance determination used.

Wing-flaps. In each landing position.

Air Brakes. In the maximum permitted extended setting.

Landing Gear. Extended.

Power. All engines operating at the power required to give a gradient of descent of 5·0%.

Trim. The aeroplane should be in trim for straight flight in these conditions, and the trimming controls should not be moved during the manoeuvre.

CS 25.149 Minimum control speed

ED Decision 2003/2/RM

(a) In establishing the minimum control speeds required by this paragraph, the method used to simulate critical engine failure must represent the most critical mode of powerplant failure with respect to controllability expected in service.

(b) V_{MC} is the calibrated airspeed, at which, when the critical engine is suddenly made inoperative, it is possible to maintain control of the aeroplane with that engine still inoperative, and maintain straight flight with an angle of bank of not more than 5°.

(c) V_{MC} may not exceed 1·13 V_{SR} with –

(1) Maximum available take-off power or thrust on the engines;

(2) The most unfavourable centre of gravity;

(3) The aeroplane trimmed for take-off;

(4) The maximum sea-level take-off weight (or any lesser weight necessary to show V_{MC});

(5) The aeroplane in the most critical take-off configuration existing along the flight path after the aeroplane becomes airborne, except with the landing gear retracted;

(6) The aeroplane airborne and the ground effect negligible; and

(7) If applicable, the propeller of the inoperative engine –

(i) Windmilling;

(ii) In the most probable position for the specific design of the propeller control; or

(iii) Feathered, if the aeroplane has an automatic feathering device acceptable for showing compliance with the climb requirements of CS 25.121.

(d) The rudder forces required to maintain control at V_{MC} may not exceed 667 N (150 lbf) nor may it be necessary to reduce power or thrust of the operative engines. During recovery, the aeroplane may not assume any dangerous attitude or require exceptional piloting skill, alertness, or strength to prevent a heading change of more than 20°.

(e) V_{MCG}, the minimum control speed on the ground, is the calibrated airspeed during the take-off run at which, when the critical engine is suddenly made inoperative, it is possible to maintain control of the aeroplane using the rudder control alone (without the use of nose-wheel steering), as limited by 667 N of force (150 lbf), and the lateral control to the extent of keeping the wings level to enable the take-off to be safely continued using normal piloting skill. In the determination of V_{MCG}, assuming that the path of the aeroplane accelerating with all engines operating is along the centreline of the runway, its path from the point at which the critical engine is made inoperative to the point at which recovery to a direction parallel to the centreline is completed, may not deviate more than 9.1 m (30 ft) laterally from the centreline at any point. V_{MCG} must be established, with –

(1) The aeroplane in each take-off configuration or, at the option of the applicant, in the most critical take-off configuration;

(2) Maximum available take-off power or thrust on the operating engines;

(3) The most unfavourable centre of gravity;

(4) The aeroplane trimmed for take-off; and

(5) The most unfavourable weight in the range of take-off weights. (See AMC 25.149(e).)

(f) (See AMC 25.149(f)) V_{MCL}, the minimum control speed during approach and landing with all engines operating, is the calibrated airspeed at which, when the critical engine is suddenly made inoperative, it is possible to maintain control of the aeroplane with that engine still inoperative, and maintain straight flight with an angle of bank of not more than 5°. V^{MCL} must be established with –

(1) The aeroplane in the most critical configuration (or, at the option of the applicant, each configuration) for approach and landing with all engines operating;

(2) The most unfavourable centre of gravity;

(3) The aeroplane trimmed for approach with all engines operating;

(4) The most unfavourable weight, or, at the option of the applicant, as a function of weight;

(5) For propeller aeroplanes, the propeller of the inoperative engine in the position it achieves without pilot action, assuming the engine fails while at the power or thrust necessary to maintain a 3 degree approach path angle; and

(6) Go-around power or thrust setting on the operating engine(s).

(g) (See AMC 25.149(g)) For aeroplanes with three or more engines, V_{MCL-2}, the minimum control speed during approach and landing with one critical engine inoperative, is the calibrated airspeed at which, when a second critical engine is suddenly made inoperative, it is possible to maintain control of the aeroplane with both engines still inoperative, and maintain straight flight with an angle of bank of not more than 5°. V_{MCL-2} must be established with –

(1) The aeroplane in the most critical configuration (or, at the option of the applicant, each configuration) for approach and landing with one critical engine inoperative;

(2) The most unfavourable centre of gravity;

(3) The aeroplane trimmed for approach with one critical engine inoperative;

(4) The most unfavourable weight, or, at the option of the applicant, as a function of weight;

(5) For propeller aeroplanes, the propeller of the more critical engine in the position it achieves without pilot action, assuming the engine fails while at the power or thrust necessary to maintain a 3 degree approach path angle, and the propeller of the other inoperative engine feathered;

(6) The power or thrust on the operating engine(s) necessary to maintain an approach path angle of 3° when one critical engine is inoperative; and

(7) The power or thrust on the operating engine(s) rapidly changed, immediately after the second critical engine is made inoperative, from the power or thrust prescribed in sub-paragraph (g)(6) of this paragraph to –

(i) Minimum power or thrust; and

(ii) Go-around power or thrust setting.

(h) In demonstrations of V_{MCL} and V_{MCL-2} –

(1) The rudder force may not exceed 667 N (150 lbf);

(2) The aeroplane may not exhibit hazardous flight characteristics or require exceptional piloting skill, alertness or strength;

(3) Lateral control must be sufficient to roll the aeroplane, from an initial condition of steady straight flight, through an angle of 20° in the direction necessary to initiate a turn away from the inoperative engine(s), in not more than 5 seconds (see AMC 25.149(h)(3)); and

(4) For propeller aeroplanes, hazardous flight characteristics must not be exhibited due to any propeller position achieved when the engine fails or during any likely subsequent movements of the engine or propeller controls (see AMC 25.149(h)(4)).

AMC 25.149 Minimum control speeds

ED Decision 2003/2/RM

1 The determination of the minimum control speed, V_{MC}, and the variation of V_{MC} with available thrust, may be made primarily by means of 'static' testing, in which the speed of the aeroplane is slowly reduced, with the thrust asymmetry already established, until the speed is reached at which straight flight can no longer be maintained. A small number of 'dynamic' tests, in which

sudden failure of the critical engine is simulated, should be made in order to check that the V_{MC}s determined by the static method are valid.

2 When minimum control speed data are expanded for the determination of minimum control speeds (including V_{MC}, V_{MCG} and V_{MCL}) for all ambient conditions, these speeds should be based on the maximum values of thrust which can reasonably be expected from a production engine in service.

The minimum control speeds should not be based on specification thrust, since this thrust represents the minimum thrust as guaranteed by the manufacturer, and the resulting speeds would be unconservative for most cases.

AMC 25.149(e) Minimum control speed

ED Decision 2003/2/RM

During determination of V_{MCG}, engine failure recognition should be provided by:

a. The pilot feeling a distinct change in the directional tracking characteristics of the aeroplane, or

b. The pilot seeing a directional divergence of the aeroplane with respect to the view outside the aeroplane.

AMC 25.149(f) Minimum control speeds

ED Decision 2003/2/RM

1 At the option of the applicant, a one-engine-inoperative landing minimum control speed, V_{MCL} (1 out) may be determined in the conditions appropriate to an approach and landing with one engine having failed before the start of the approach. In this case, only those configurations recommended for use during an approach and landing with one engine inoperative need be considered. The propeller of the inoperative engine, if applicable, may be feathered throughout.

2 The resulting value of V_{MCL} (1 out) may be used in determining the recommended procedures and speeds for a one-engine-inoperative approach and landing.

AMC 25.149(g) Minimum control speeds

ED Decision 2003/2/RM

1 At the option of the applicant, a two-engine-inoperative landing minimum control speed, V_{MCL-2} (2 out) may be determined in the conditions appropriate to an approach and landing with two engines having failed before the start of the approach. In this case, only those configurations recommended for use during an approach and landing with two engines inoperative need be considered. The propellers of the inoperative engines, if applicable, may be feathered throughout.

2 The values of V_{MCL-2} or V_{MCL-2} (2 out) should be used as guidance in determining the recommended procedures and speeds for a two-engines-inoperative approach and landing.

AMC 25.149(h)(3) Minimum control speeds

ED Decision 2003/2/RM

The 20° lateral control demonstration manoeuvre may be flown as a bank-to-bank roll through wings level.

AMC 25.149(h)(4) Minimum control speeds

ED Decision 2003/2/RM

Where an autofeather or other drag limiting system is installed and will be operative at approach power settings, its operation may be assumed in determining the propeller position achieved when the engine fails. Where automatic feathering is not available the effects of subsequent movements of the engine and propeller controls should be considered, including fully closing the power lever of the failed engine in conjunction with maintaining the go-around power setting on the operating engine(s).

TRIM

CS 25.161 Trim

ED Decision 2003/2/RM

(a) *General*. Each aeroplane must meet the trim requirements of this paragraph after being trimmed, and without further pressure upon, or movement of, either the primary controls or their corresponding trim controls by the pilot or the automatic pilot.

(b) *Lateral and directional trim.* The aeroplane must maintain lateral and directional trim with the most adverse lateral displacement of the centre of gravity within the relevant operating limitations, during normally expected conditions of operation (including operation at any speed from 1·3 V_{SR1}, to V_{MO}/M_{MO}).

(c) *Longitudinal trim.* The aeroplane must maintain longitudinal trim during –

(1) A climb with maximum continuous power at a speed not more than 1·3 V_{SR1}, with the landing gear retracted, and the wing-flaps (i) retracted and (ii) in the take-off position;

(2) Either a glide with power off at a speed not more than 1·3 V_{SR1}, or an approach within the normal range of approach speeds appropriate to the weight and configuration with power settings corresponding to a 3° glidepath, whichever is the most severe, with the landing gear extended, the wing-flaps retracted and extended, and with the most unfavourable combination of centre of gravity position and weight approved for landing; and

(3) Level flight at any speed from 1·3 V_{SR1}, to V_{MO}/M_{MO}, with the landing gear and wing-flaps retracted, and from 1·3 V_{SR1} to V_{LE} with the landing gear extended.

(d) *Longitudinal, directional, and lateral trim.* The aeroplane must maintain longitudinal, directional, and lateral trim (and for lateral trim, the angle of bank may not exceed 5°) at 1·3 V_{SR1}, during the climbing flight with –

(1) The critical engine inoperative;

(2) The remaining engines at maximum continuous power; and

(3) The landing gear and wing-flaps retracted.

(e) *Aeroplanes with four or more engines.* Each aeroplane with four or more engines must also maintain trim in rectilinear flight with the most unfavourable centre of gravity and at the climb speed, configuration, and power required by CS 25.123(a) for the purpose of establishing the en-route flight path with two engines inoperative.

STABILITY

CS 25.171 General

ED Decision 2003/2/RM

The aeroplane must be longitudinally, directionally and laterally stable in accordance with the provisions of CS 25.173 to 25.177. In addition, suitable stability and control feel (static stability) is required in any condition normally encountered in service, if flight tests show it is necessary for safe operation.

CS 25.173 Static longitudinal stability

ED Decision 2003/2/RM

Under the conditions specified in CS 25.175, the characteristics of the elevator control forces (including friction) must be as follows:

(a) A pull must be required to obtain and maintain speeds below the specified trim speed, and a push must be required to obtain and maintain speeds above the specified trim speed. This must be shown at any speed that can be obtained except speeds higher than the landing gear or wing flap operating limit speeds or V_{FC}/M_{FC}, whichever is appropriate, or lower than the minimum speed for steady unstalled flight.

(b) The airspeed must return to within 10% of the original trim speed for the climb, approach and landing conditions specified in CS 25.175(a), (c) and (d), and must return to within 7·5% of the original trim speed for the cruising condition specified in CS 25.175(b), when the control force is slowly released from any speed within the range specified in sub-paragraph (a) of this paragraph.

(c) The average gradient of the stable slope of the stick force versus speed curve may not be less than 4 N (1 pound) for each 11,2 km/h (6 kt). (See AMC 25.173(c).)

(d) Within the free return speed range specified in sub-paragraph (b) of this paragraph, it is permissible for the aeroplane, without control forces, to stabilise on speeds above or below the desired trim speeds if exceptional attention on the part of the pilot is not required to return to and maintain the desired trim speed and altitude.

AMC 25.173(c) Static longitudinal stability

ED Decision 2003/2/RM

The average gradient is taken over each half of the speed range between 0·85 and 1·15 V_{trim}.

CS 25.175 Demonstration of static longitudinal stability

ED Decision 2003/2/RM

Static longitudinal stability must be shown as follows:

(a) *Climb*. The stick force curve must have a stable slope at speeds between 85% and 115% of the speed at which the aeroplane –

(1) Is trimmed with –

(i) Wing-flaps retracted;

(ii) Landing gear retracted;

(iii) Maximum take-off weight; and

(iv) The maximum power or thrust selected by the applicant as an operating limitation for use during climb; and

(2) Is trimmed at the speed for best rate-of-climb except that the speed need not be less than 1·3 V_{SR1}.

(b) *Cruise*. Static longitudinal stability must be shown in the cruise condition as follows:

(1) With the landing gear retracted at high speed, the stick force curve must have a stable slope at all speeds within a range which is the greater of 15% of the trim speed plus the resulting free return speed range, or 93 km/h (50 kt) plus the resulting free return speed range, above and below the trim speed (except that the speed range need not include speeds less than 1·3 V_{SR1} nor speeds greater than V_{FC}/M_{FC}, nor speeds that require a stick force of more than 222 N (50 lbf)), with –

(i) The wing-flaps retracted;

(ii) The centre of gravity in the most adverse position (see CS 25.27);

(iii) The most critical weight between the maximum take-off and maximum landing weights;

(iv) The maximum cruising power selected by the applicant as an operating limitation (see CS 25.1521), except that the power need not exceed that required at V_{MO}/M_{MO}; and

(v) The aeroplane trimmed for level flight with the power required in sub-paragraph (iv) above.

(2) With the landing gear retracted at low speed, the stick force curve must have a stable slope at all speeds within a range which is the greater of 15% of the trim speed plus the resulting free return speed range, or 93 km/h (50 kt) plus the resulting free return speed range, above and below the trim speed (except that the speed range need not include speeds less than 1·3 V_{SR1} nor speeds greater than the minimum speed of the applicable speed range prescribed in subparagraph (b)(1) of this paragraph, nor speeds that require a stick force of more than 222 N (50 lbf)), with –

(i) Wing-flaps, centre of gravity position, and weight as specified in sub-paragraph (1) of this paragraph;

(ii) Power required for level flight at a speed equal to $\frac{V_{MO}+1{\cdot}3V_{SR1}}{2}$; and

(iii) The aeroplane trimmed for level flight with the power required in sub-paragraph (ii) above.

(3) With the landing gear extended, the stick force curve must have a stable slope at all speeds within a range which is the greater of 15% of the trim speed plus the resulting free return speed range or 93 km/h (50 kt) plus the resulting free return speed range, above and below the trim speed (except that the speed range need not include speeds less than 1·3 V_{SR1}, nor speeds greater than V_{LE}, nor speeds that require a stick force of more than 222 N (50 lbf)), with –

(i) Wing-flap, centre of gravity position, and weight as specified in sub-paragraph (b)(1) of this paragraph;

(ii) The maximum cruising power selected by the applicant as an operating limitation, except that the power need not exceed that required for level flight at V_{LE}; and

(iii) The aeroplane trimmed for level flight with the power required in sub-paragraph (ii) above.

(c) *Approach.* The stick force curve must have a stable slope at speeds between V_{SW}, and 1·7 V_{SR1} with –

(1) Wing-flaps in the approach position;

(2) Landing gear retracted;

(3) Maximum landing weight; and

(4) The aeroplane trimmed at 1·3 V_{SR1}, with enough power to maintain level flight at this speed.

(d) *Landing*. The stick force curve must have a stable slope and the stick force may not exceed 356 N (80 lbf) at speeds between V_{SW}, and 1·7 V_{SR0} with –

(1) Wing-flaps in the landing position;

(2) Landing gear extended;

(3) Maximum landing weight;

(4) The aeroplane trimmed at 1·3 V_{SR0} with –

(i) Power or thrust off, and

(ii) Power or thrust for level flight.

CS 25.177 Static directional and lateral stability

ED Decision 2003/2/RM

(a) The static directional stability (as shown by the tendency to recover from a skid with the rudder free) must be positive for any landing gear and flap position and symmetrical power condition, at speeds from 1·13 V_{SR1}, up to V_{FE}, V_{LE}, or V_{FC}/M_{FC} (as appropriate).

(b) The static lateral stability (as shown by the tendency to raise the low wing in a sideslip with the aileron controls free) for any landing gear and wingflap position and symmetric power condition, may not be negative at any airspeed (except that speeds higher than V_{FE} need not be considered for wingflaps extended configurations nor speeds higher than V_{LE} for landing gear extended configurations) in the following airspeed ranges (see AMC 25.177(b)):

(1) From 1·13 V_{SR1} to V_{MO}/M_{MO}..

(2) From V_{MO}/M_{MO} to V_{FC}/M_{FC}, unless the divergence is –

(i) Gradual;

(ii) Easily recognisable by the pilot; and

(iii) Easily controllable by the pilot

(c) In straight, steady, sideslips over the range of sideslip angles appropriate to the operation of the aeroplane, but not less than those obtained with onehalf of the available rudder control input or a rudder control force of 801 N (180 lbf) , the aileron and rudder control movements and forces must be substantially proportional to the angle of sideslip in a stable sense; and the factor of proportionality must lie between limits found necessary for safe operation This

requirement must be met for the configurations and speeds specified in sub-paragraph (a) of this paragraph. (See AMC 25.177(c).)

(d) For sideslip angles greater than those prescribed by sub-paragraph (c) of this paragraph, up to the angle at which full rudder control is used or a rudder control force of 801 N (180 lbf) is obtained, the rudder control forces may not reverse, and increased rudder deflection must be needed for increased angles of sideslip. Compliance with this requirement must be shown using straight, steady sideslips, unless full lateral control input is achieved before reaching either full rudder control input or a rudder control force of 801 N (180 lbf) ; a straight, steady sideslip need not be maintained after achieving full lateral control input. This requirement must be met at all approved landing gear and wingflap positions for the range of operating speeds and power conditions appropriate to each landing gear and wing-flap position with all engines operating. (See AMC 25.177(d).)

AMC 25.177(c) Steady, Straight Sideslips

ED Decision 2003/2/RM

1 CS 25.177(c) requires, in steady, straight sideslips throughout the range of sideslip angles appropriate to the operation of the aeroplane, but not less than those obtained with one half of the available rudder control input (e.g., rudder pedal input) or a rudder control force of 801 N (180 lbf), that the aileron and rudder control movements and forces be proportional to the angle of sideslip. Also, the factor of proportionality must lie between limits found necessary for safe operation. CS 25.177(c) states, by cross-reference to CS 25.177(a), that these steady, straight sideslip criteria must be met for all landing gear and flap positions and symmetrical power conditions at speeds from 1.13 V_{SR1} to V_{FE}, V_{LE}, or V_{FC}/M_{FC}, as appropriate for the configuration.

2 *Sideslip Angles Appropriate to the Operation of the Aeroplane*

2.1 Experience has shown that an acceptable method for determining the appropriate sideslip angle for the operation of a transport category aeroplane is provided by the following equation:

ß = arc sin (30/V)

where

ß = Sideslip angle, and

V = Airspeed (KCAS)

Recognising that smaller sideslip angles are appropriate as speed is increased, this equation provides sideslip angle as a function of airspeed. The equation is based on the theoretical sideslip value for a 56 km/h (30-knot) crosswind, but has been shown to conservatively represent (i.e., exceed) the sideslip angles achieved in maximum crosswind take-offs and landings and minimum static and dynamic control speed testing for a variety of transport category aeroplanes. Experience has also shown that a maximum sideslip angle of 15 degrees is generally appropriate for most transport category aeroplanes even though the equation may provide a higher sideslip angle. However, limiting the maximum sideslip angle to 15 degrees may not be appropriate for aeroplanes with low approach speeds or high crosswind capability.

2.2 A lower sideslip angle than that provided in paragraph 2.1 may be used if it is substantiated that the lower value conservatively covers all crosswind conditions, engine failure scenarios, and other conditions where sideslip may be experienced within the

approved operating envelope. Conversely, a higher value should be used for aeroplanes where test evidence indicates that a higher value would be appropriate to the operation of the aeroplane.

3 For the purposes of showing compliance with the requirement out to sideslip angles associated with one-half of the available rudder control input, there is no need to consider a rudder control input beyond that corresponding to full available rudder surface travel or a rudder control force of 801 N (180 lbf). Some rudder control system designs may limit the available rudder surface deflection such that full deflection for the particular flight condition is reached before the rudder control reaches onehalf of its available travel. In such cases, further rudder control input would not result in additional rudder surface deflection.

4 *Steady, straight sideslips*

4.1 Steady, straight sideslips should be conducted in each direction to show that the aileron and rudder control movements and forces are substantially proportional to the angle of sideslip in a stable sense, and that the factor of proportionality is within the limits found necessary for safe operation. These tests should be conducted at progressively greater sideslip angles up to the sideslip angle appropriate to the operation of the aeroplane (see paragraph 2.1) or the sideslip angle associated with one-half of the available rudder control input, whichever is greater.

4.2 When determining the rudder and aileron control forces, the controls should be relaxed at each point to find the minimum force needed to maintain the control surface deflection. If excessive friction is present, the resulting low forces will indicate the aeroplane does not have acceptable stability characteristics.

4.3 In lieu of conducting each of the separate qualitative tests required by CS 25.177(a) and (b), the applicant may use recorded quantitative data showing aileron and rudder control force and position versus sideslip (left and right) to the appropriate limits in the steady heading sideslips conducted to show compliance with CS 25.177(c). If the control force and position versus sideslip indicates positive dihedral effect and positive directional stability, compliance with CS 25.177(a) and (b) will have been successfully demonstrated."

AMC 25.177(d) Full Rudder Sideslips

ED Decision 2003/2/RM

1.1 At sideslip angles greater than those appropriate for normal operation of the aeroplane, up to the sideslip angle at which full rudder control is used or a rudder control force of 801 N (180 lbf) is obtained, CS 25.177(d) requires that the rudder control forces may not reverse and increased rudder deflection must be needed for increased angles of sideslip. The goals of this higher-than-normal sideslip angle test are to show that at full rudder, or at maximum expected pilot effort: (1) the rudder control force does not reverse, and (2) increased rudder deflection must be needed for increased angles of sideslip, thus demonstrating freedom from rudder lock or fin stall, and adequate directional stability for manoeuvres involving large rudder inputs.

1.2 Compliance with this requirement should be shown using straight, steady sideslips. However, if full lateral control input is reached before full rudder control travel or a rudder control force of 801 N (180 lbf) is reached, the manoeuvre may be continued in a non-steady heading (i.e., rolling and yawing) manoeuvre. Care should be taken to prevent excessive bank angles that may occur during this manoeuvre.

1.3 CS 25.177(d) states that the criteria listed in paragraph 1.1 must be met at all approved landing gear and flap positions for the range of operating speeds and power conditions appropriate to each landing gear and flap position with all engines operating. The range of operating speeds and power conditions appropriate to each landing gear and flap position with all engines operating should be consistent with the following:

a. For take-off configurations, speeds from V_2+xx (airspeed approved for all-engines-operating initial climb) to V_{FE} or V_{LE}, as appropriate, and take-off power/thrust;

b. For flaps up configurations, speeds from 1.23 V_{SR} to V_{LE} or V_{MO}/M_{MO}, as appropriate, and power from idle to maximum continuous power/thrust;

c. For approach configurations, speeds from 1.23 V_{SR} to V_{FE} or V_{LE}, as appropriate, and power from idle to go-around power/thrust; and

d. For landing configurations, speeds from V_{REF}-9.3 km/h (5 knots) to V_{FE} or V_{LE}, as appropriate, with power from idle to go-around power/thrust at speeds from V_{REF} to V_{FE}/V_{LE}, and idle power at V_{REF}-9.3 km/h (5 knots) (to cover the landing flare).

2 *Full Rudder Sideslips*

2.1 Rudder lock is that condition where the rudder over-balances aerodynamically and either deflects fully with no additional pilot input or does not tend to return to neutral when the pilot input is released. It is indicated by a reversal in the rudder control force as sideslip angle is increased. Full rudder sideslips are conducted to determine the rudder control forces and deflections out to sideslip angles associated with full rudder control input (or as limited by a rudder control force of 801 N (180 lbf)) to investigate the potential for rudder lock and lack of directional stability.

2.2 To check for positive directional stability and for the absence of rudder lock, conduct steady heading sideslips at increasing sideslip angles until obtaining full rudder control input or a rudder control force of 801 N (180 lbf). If full lateral control is reached before reaching the rudder control limit or 801 (180 lbf) of rudder control force, continue the test to the rudder limiting condition in a non-steady heading sideslip manoeuvre.

3 The control limits approved for the aeroplane should not be exceeded when conducting the flight tests required by CS 25.177.

4 *Flight Test Safety Concerns.* In planning for and conducting the full rudder sideslips, items relevant to flight test safety should be considered, including:

a. Inadvertent stalls,

b. Effects of sideslip on stall protection systems,

c. Actuation of stick pusher, including the effects of sideslip on angle-of-attack sensor vanes,

d. Heavy buffet,

e. Exceeding flap loads or other structural limits,

f. Extreme bank angles,

g. Propulsion system behaviour (e.g., propeller stress, fuel and oil supply, and inlet stability),

h. Minimum altitude for recovery,

i. Resulting roll rates when aileron limit is exceeded, and

j. Position errors and effects on electronic or augmented flight control systems, especially when using the aeroplane's production airspeed system.

CS 25.181 Dynamic stability

ED Decision 2003/2/RM

(a) Any short period oscillation, not including combined lateral-directional oscillations, occurring between 1·13 V_{SR} and maximum allowable speed appropriate to the configuration of the aeroplane must be heavily damped with the primary controls –

(1) Free; and

(2) In a fixed position.

(b) Any combined lateral-directional oscillations ('Dutch roll') occurring between 1·13 V_{SR} and maximum allowable speed appropriate to the configuration of the aeroplane must be positively damped with controls free, and must be controllable with normal use of the primary controls without requiring exceptional pilot skill.

AMC 25.181 Dynamic stability

ED Decision 2003/2/RM

The requirements of CS 25.181 are applicable at all speeds between the stalling speed and V_{FE}, V_{LE} or V_{FC}/M_{FC}, as appropriate.

STALLS

CS 25.201 Stall demonstration

ED Decision 2003/2/RM

(a) Stalls must be shown in straight flight and in 30° banked turns with –

(1) Power off; and

(2) The power necessary to maintain level flight at 1·5 V_{SR1} (where VS_{R1} corresponds to the reference stall speed at maximum landing weight with flaps in the approach position and the landing gear retracted. (See AMC 25.201(a)(2).)

(b) In each condition required by sub-paragraph (a) of this paragraph, it must be possible to meet the applicable requirements of CS 25.203 with –

(1) Flaps, landing gear and deceleration devices in any likely combination of positions approved for operation; (See AMC 25.201(b)(1).)

(2) Representative weights within the range for which certification is requested;

(3) The most adverse centre of gravity for recovery; and

(4) The aeroplane trimmed for straight flight at the speed prescribed in CS 25.103(b)(6).

(c) The following procedures must be used to show compliance with CS 25.203:

(1) Starting at a speed sufficiently above the stalling speed to ensure that a steady rate of speed reduction can be established, apply the longitudinal control so that the speed reduction does not exceed 0.5 m/s^2 (one knot per second) until the aeroplane is stalled. (See AMC 25.103(c).)

(2) In addition, for turning flight stalls, apply the longitudinal control to achieve airspeed deceleration rates up to 5,6 km/h (3 kt) per second. (See AMC 25.201(c)(2).)

(3) As soon as the aeroplane is stalled, recover by normal recovery techniques.

(d) The aeroplane is considered stalled when the behaviour of the aeroplane gives the pilot a clear and distinctive indication of an acceptable nature that the aeroplane is stalled. (See AMC 25.201(d).) Acceptable indications of a stall, occurring either individually or in combination, are –

(1) A nose-down pitch that cannot be readily arrested;

(2) Buffeting, of a magnitude and severity that is a strong and effective deterrent to further speed reduction; or

(3) The pitch control reaches the aft stop and no further increase in pitch attitude occurs when the control is held full aft for a short time before recovery is initiated. (See AMC 25.201(d)(3).)

AMC 25.201(a)(2) Stall demonstration

ED Decision 2003/2/RM

The power for all power-on stall demonstrations is that power necessary to maintain level flight at a speed of 1·5 V_{SR1} at maximum landing weight, with flaps in the approach position and landing gear retracted, where V_{SR1} is the reference stall speed in the same conditions (except power). The flap position to be used to determine this power setting is that position in which the reference stall speed

does not exceed 110% of the reference stall speed with the flaps in the most extended landing position.

AMC 25.201(b)(1) Stall demonstration

ED Decision 2003/2/RM

Stall demonstrations for compliance with CS 25.201 should include demonstrations with deceleration devices deployed for all flap positions unless limitations against use of the devices with particular flap positions are imposed. 'Deceleration devices' include spoilers when used as air brakes, and thrust reversers when use in flight is permitted. Stall demonstrations with deceleration devices deployed should normally be carried out with power off, except where deployment of the deceleration devices while power is applied is likely to occur in normal operations (e.g. use of extended air brakes during landing approach).

AMC 25.201(c)(2) Turning Flight Stalls At Higher Deceleration Rates

ED Decision 2003/2/RM

The intent of evaluating higher deceleration rates is to demonstrate safe characteristics at higher rates of increase of angle of attack than are obtained from the 0.5 m/s^2 (1 knot per second) stalls. The specified airspeed deceleration rate, and associated angle of attack rate, should be maintained up to the point at which the aeroplane stalls.

AMC 25.201(d) Stall demonstration

ED Decision 2003/2/RM

1 The behaviour of the aeroplane includes the behaviour as affected by the normal functioning of any systems with which the aeroplane is equipped, including devices intended to alter the stalling characteristics of the aeroplane.

2 Unless the design of the automatic flight control system of the aeroplane protects against such an event, the stalling characteristics and adequacy of stall warning, when the aeroplane is stalled under the control of the automatic flight control system, should be investigated. (See also CS 25.1329(f).)

AMC 25.201(d)(3) Stall demonstration

ED Decision 2003/2/RM

An acceptable interpretation of holding the pitch control on the aft stop for a short time is:

a. The pitch control reaches the aft stop and is held full aft for 2 seconds or until the pitch attitude stops increasing, whichever occurs later.

b. In the case of turning flight stalls, recovery may be initiated once the pitch control reaches the aft stop when accompanied by a rolling motion that is not immediately controllable (provided the rolling motion complies with CS 25.203(c)).

c. For those aeroplanes where stall is defined by full nose up longitudinal control for both forward and aft C.G., the time at full aft stick should be not less than was used for stall speed determination, except as permitted by paragraph (b) above.

CS 25.203 Stall characteristics

ED Decision 2003/2/RM

(a) It must be possible to produce and to correct roll and yaw by unreversed use of aileron and rudder controls, up to the time the aeroplane is stalled. No abnormal nose-up pitching may occur. The longitudinal control force must be positive up to and throughout the stall. In addition, it must be possible to promptly prevent stalling and to recover from a stall by normal use of the controls.

(b) For level wing stalls, the roll occurring between the stall and the completion of the recovery may not exceed approximately 20°.

(c) For turning flight stalls, the action of the aeroplane after the stall may not be so violent or extreme as to make it difficult, with normal piloting skill, to effect a prompt recovery and to regain control of the aeroplane. The maximum bank angle that occurs during the recovery may not exceed –

(1) Approximately 60° in the original direction of the turn, or 30° in the opposite direction, for deceleration rates up to 0.5 m/s^2 (1 knot per second); and

(2) Approximately 90° in the original direction of the turn, or 60° in the opposite direction, for deceleration rates in excess of 0.5 m/s^2 (1 knot per second).

AMC 25.203 Stall characteristics

ED Decision 2003/2/RM

1 *Static Longitudinal Stability during the Approach to the Stall.* During the approach to the stall the longitudinal control pull force should increase continuously as speed is reduced from the trimmed speed to the onset of stall warning. At lower speeds some reduction in longitudinal control pull force will be acceptable provided that it is not sudden or excessive.

2 *Rolling Motions at the Stall*

2.1 Where the stall is indicated by a nose-down pitch, this may be accompanied by a rolling motion that is not immediately controllable, provided that the rolling motion complies with CS 25.203(b) or (c) as appropriate.

2.2 In level wing stalls the bank angle may exceed 20° occasionally, provided that lateral control is effective during recovery.

3 *Deep Stall Penetration*. Where the results of wind tunnel tests reveal a risk of a catastrophic phenomenon (e.g. superstall, a condition at angles beyond the stalling incidence from which it proves difficult or impossible to recover the aeroplane), studies should be made to show that adequate recovery control is available at and sufficiently beyond the stalling incidence to avoid such a phenomenon.

CS 25.207 Stall warning

ED Decision 2003/2/RM

(a) Stall warning with sufficient margin to prevent inadvertent stalling with the flaps and landing gear in any normal position must be clear and distinctive to the pilot in straight and turning flight.

(b) The warning may be furnished either through the inherent aerodynamic qualities of the aeroplane or by a device that will give clearly distinguishable indications under expected conditions of flight. However, a visual stall warning device that requires the attention of the

crew within the cockpit is not acceptable by itself. If a warning device is used, it must provide a warning in each of the aeroplane configurations prescribed in sub-paragraph (a) of this paragraph at the speed prescribed in sub-paragraphs (c) and (d) of this paragraph. (See AMC 25.207(b).)

(c) When the speed is reduced at rates not exceeding 0.5 m/s^2 (one knot per second), stall warning must begin, in each normal configuration, at a speed, V_{SW}, exceeding the speed at which the stall is identified in accordance with CS 25.201(d) by not less than 9.3 km/h (five knots) or five percent CAS, whichever is greater. Once initiated, stall warning must continue until the angle of attack is reduced to approximately that at which stall warning began. (See AMC 25.207(c) and (d)).

(d) In addition to the requirement of subparagraph(c) of this paragraph, when the speed is reduced at rates not exceeding 0.5 m/s^2 (one knot per second), in straight flight with engines idling and at the centre-of-gravity position specified in CS 25.103(b)(5), V_{SW}, in each normal configuration, must exceed V_{SR} by not less than 5.6 km/h (three knots) or three percent CAS, whichever is greater. (See AMC 25.207(c) and (d)).

(e) The stall warning margin must be sufficient to allow the pilot to prevent stalling (as defined in CS 25.201(d)) when recovery is initiated not less than one second after the onset of stall warning in slowdown turns with at least 1.5g load factor normal to the flight path and airspeed deceleration rates of at least 1 m/s^2 (2 knots per second), with the flaps and landing gear in any normal position, with the aeroplane trimmed for straight flight at a speed of 1.3 V_{SR}, and with the power or thrust necessary to maintain level flight at 1.3 V_{SR}.

(f) Stall warning must also be provided in each abnormal configuration of the high lift devices that is likely to be used in flight following system failures (including all configurations covered by Flight Manual procedures).

AMC 25.207(b) Stall warning

ED Decision 2003/2/RM

1 A warning which is clear and distinctive to the pilot is one which cannot be misinterpreted or mistaken for any other warning, and which, without being unduly alarming, impresses itself upon the pilot and captures his attention regardless of what other tasks and activities are occupying his attention and commanding his concentration. Where stall warning is to be provided by artificial means, a stick shaker device producing both a tactile and an audible warning is an Acceptable Means of Compliance.

2 Where stall warning is provided by means of a device, compliance with the requirement of CS 25.21(e) should be established by ensuring that the device has a high degree of reliability. One means of complying with this criterion is to provide dual independent systems.

AMC 25.207(c) and (d) Stall warning

ED Decision 2003/2/RM

1 An acceptable method of demonstrating compliance with CS 25.207(c) is to consider stall warning speed margins obtained during stall speed demonstration (CS 25.103) and stall demonstration (CS 25.201(a)) (i.e. bank angle, power and centre of gravity conditions).

In addition, if the stall warning margin is managed by a system (thrust law, bank angle law, …), stall warning speed margin required by CS 25.207(c) should be demonstrated, when the speed is reduced at rates not exceeding 0.5 m/s^2 (one knot per second), for the most critical conditions in terms of stall warning margin, without exceeding 40° bank angle or maximum continuous

power or thrust during the demonstrations. In the case where the management system increases, by design, the stall warning speed margin from the nominal setting (flight idle, wing level), no additional demonstration needs to be done.

2 The stall warning speed margins required by CS 25.207(c) and (d) must be determined at a constant load factor (i.e. 1g for 207(d)). An acceptable data reduction method is to calculate $k = \sqrt{(C_{LID}/C_{LSW})}$ where C_{LID} and C_{LSW} are the C_L values respectively at the stall identification and at the stall warning activation.

3 If the stall warning required by CS 25.207 is provided by a device (e.g. a stick shaker), the effect of production tolerances on the stall warning system should be considered when evaluating the stall warning margin required by CS 25.207(c) and (d) and the manoeuvre capabilities required by CS 25.143(g).

a. The stall warning margin required by CS 25.207(c) and (d) should be available with the stall warning system set to the most critical setting expected in production. Unless another setting would be provide a lesser margin, the stall warning margin required by CS 25.207(c) should be evaluated assuming the stall warning system is operating at its high angle of attack limit. For aeroplanes equipped with a device that abruptly pushes the nose down at a selected angle-of-attack (e.g. a stick pusher), the stall warning margin required by CS 25.207(c) may be evaluated with both the stall warning and stall identification (e.g. stick pusher) systems at their nominal angle of attack settings unless a lesser margin can result from the various system tolerances.

b. The manoeuvre capabilities required by CS 25.143(g) should be available assuming the stall warning system is operating on its nominal setting. In addition, when the stall warning system is operating at its low angle of attack limit, the manoeuvre capabilities should not be reduced by more than 2 degrees of bank angle from those specified in CS 25.143(g).

c. The stall warning margins and manoeuvre capabilities may be demonstrated by flight testing at the settings specified above for the stall warning and, if applicable, stall identification systems. Alternatively, compliance may be shown by applying adjustments to flight test data obtained at a different system setting.

GROUND HANDLING CHARACTERISTICS

CS 25.231 Longitudinal stability and control

ED Decision 2003/2/RM

(a) Aeroplanes may have no uncontrollable tendency to nose over in any reasonably expected operating condition or when rebound occurs during landing or take-off. In addition –

(1) Wheel brakes must operate smoothly and may not cause any undue tendency to nose over; and

(2) If a tail-wheel landing gear is used, it must be possible, during the take-off ground run on concrete, to maintain any attitude up to thrust line level, at 75% of V_{SR1}.

CS 25.233 Directional stability and control

ED Decision 2003/2/RM

(a) There may be no uncontrollable ground-looping tendency in 90° cross winds, up to a wind velocity of 37 km/h (20 kt) or 0·2 V_{SR0}, whichever is greater, except that the wind velocity need not exceed 46 km/h (25 kt) at any speed at which the aeroplane may be expected to be operated on the ground. This may be shown while establishing the 90° cross component of wind velocity required by CS 25.237.

(b) Aeroplanes must be satisfactorily controllable, without exceptional piloting skill or alertness, in power-off landings at normal landing speed, without using brakes or engine power to maintain a straight path. This may be shown during power-off landings made in conjunction with other tests.

(c) The aeroplane must have adequate directional control during taxying. This may be shown during taxying prior to take-offs made in conjunction with other tests.

CS 25.235 Taxying condition

ED Decision 2003/2/RM

The shock absorbing mechanism may not damage the structure of the aeroplane when the aeroplane is taxied on the roughest ground that may reasonably be expected in normal operation.

CS 25.237 Wind velocities

ED Decision 2003/2/RM

(a) A 90° cross component of wind velocity, demonstrated to be safe for take-off and landing, must be established for dry runways and must be at least 37 km/h (20 kt) or 0·2 V_{SR0}, whichever is greater, except that it need not exceed 46 km/h (25 kt).

MISCELLANEOUS FLIGHT REQUIREMENTS

CS 25.251 Vibration and buffeting

ED Decision 2005/006/R

(a) The aeroplane must be demonstrated in flight to be free from any vibration and buffeting that would prevent continued safe flight in any likely operating condition.

(b) Each part of the aeroplane must be demonstrated in flight to be free from excessive vibration under any appropriate speed and power conditions up to V_{DF}/M_{DF}. The maximum speeds shown must be used in establishing the operating limitations of the aeroplane in accordance with CS 25.1505.

(c) Except as provided in sub-paragraph (d) of this paragraph, there may be no buffeting condition, in normal flight, including configuration changes during cruise, severe enough to interfere with the control of the aeroplane, to cause excessive fatigue to the crew, or to cause structural damage. Stall warning buffeting within these limits is allowable.

(d) There may be no perceptible buffeting condition in the cruise configuration in straight flight at any speed up to V_{MO}/M_{MO}, except that the stall warning buffeting is allowable.

(e) For an aeroplane with M_D greater than 0·6 or with a maximum operating altitude greater than 7620 m (25,000 ft), the positive manoeuvring load factors at which the onset of perceptible buffeting occurs must be determined with the aeroplane in the cruise configuration for the ranges of airspeed or Mach number, weight, and altitude for which the aeroplane is to be certificated. The envelopes of load factor, speed, altitude, and weight must provide a sufficient range of speeds and load factors for normal operations. Probable inadvertent excursions beyond the boundaries of the buffet onset envelopes may not result in unsafe conditions. (See AMC 25.251(e).)

[Amdt 25/1]

AMC 25.251(e) Vibration and Buffeting in Cruising Flight

ED Decision 2003/2/RM

1 *Probable Inadvertent Excursions beyond the Buffet Boundary*

1.1 CS 25.251(e) states that probable inadvertent excursions beyond the buffet onset boundary may not result in unsafe conditions.

1.2 An acceptable means of compliance with this requirement is to demonstrate by means of flight tests beyond the buffet onset boundary that hazardous conditions will not be encountered within the permitted manoeuvring envelope (as defined by CS 25.337) without adequate prior warning being given by severe buffeting or high stick forces.

1.3 Buffet onset is the lowest level of buffet intensity consistently apparent to the flight crew during normal acceleration demonstrations in smooth air conditions.

1.4 In flight tests beyond the buffet onset boundary to satisfy paragraph 1.2, the load factor should be increased until either –

a. The level of buffet becomes sufficient to provide an obvious warning to the pilot which is a strong deterrent to further application of load factor; or

b. Further increase of load factor requires a stick force in excess of 445 N (100 lbf), or is impossible because of the limitations of the control system; or

c. The positive limit manoeuvring load factor established in compliance with CS 25.337(b) is achieved.

1.5 Within the range of load factors defined in paragraph 1.4 no hazardous conditions (such as hazardous involuntary changes of pitch or roll attitude, engine or systems malfunctioning which require urgent corrective action by the flight crew, or difficulty in reading the instruments or controlling the aeroplane) should be encountered.

2 *Range of Load Factor for Normal Operations*

2.1 CS 25.251(e) requires that the envelopes of load factor, speed, altitude and weight must provide a sufficient range of speeds and load factors for normal operations.

2.2 An acceptable means of compliance with the requirement is to establish the maximum altitude at which it is possible to achieve a positive normal acceleration increment of 0·3 g without exceeding the buffet onset boundary.

CS 25.253 High-speed characteristics

ED Decision 2003/2/RM

(a) *Speed increase and recovery characteristics.* The following speed increase and recovery characteristics must be met:

(1) Operating conditions and characteristics likely to cause inadvertent speed increases (including upsets in pitch and roll) must be simulated with the aeroplane trimmed at any likely cruise speed up to V_{MO}/M_{MO}. These conditions and characteristics include gust upsets, inadvertent control movements, low stick force gradient in relation to control friction, passenger movement, levelling off from climb, and descent from Mach to air speed limit altitudes.

(2) Allowing for pilot reaction time after effective inherent or artificial speed warning occurs, it must be shown that the aeroplane can be recovered to a normal attitude and its speed reduced to V_{MO}/M_{MO}, without –

(i) Exceptional piloting strength or skill;

(ii) Exceeding V_D/M_D, V_{DF}/M_{DF}, or the structural limitations; and

(iii) Buffeting that would impair the pilot's ability to read the instruments or control the aeroplane for recovery.

(3) With the aeroplane trimmed at any speed up to V_{MO}/M_{MO}, there must be no reversal of the response to control input about any axis at any speed up to V_{DF}/M_{DF}. Any tendency to pitch, roll, or yaw must be mild and readily controllable, using normal piloting techniques. When the aeroplane is trimmed at V_{MO}/M_{MO}, the slope of the elevator control force versus speed curve need not be stable at speeds greater than V_{FC}/M_{FC}, but there must be a push force at all speeds up to V_{DF}/M_{DF} and there must be no sudden or excessive reduction of elevator control force as V_{DF}/M_{DF} is reached.

(4) Adequate roll capability to assure a prompt recovery from a lateral upset condition must be available at any speed up to V_{DF}/M_{DF}. (See AMC 25.253(a)(4).)

(5) *Extension of speedbrakes.* With the aeroplane trimmed at V_{MO}/M_{MO}, extension of the speedbrakes over the available range of movements of the pilots control, at all speeds above V_{MO}/M_{MO}, but not so high that V_{DF}/M_{DF} would be exceeded during the manoeuvre, must not result in:

(i) An excessive positive load factor when the pilot does not take action to counteract the effects of extension;

(ii) Buffeting that would impair the pilot's ability to read the instruments or control the aeroplane for recovery; or

(iii) A nose-down pitching moment, unless it is small. (See AMC 25.253(a)(5).)

(6) Reserved

(b) *Maximum speed for stability characteristics, V_{FC}/M_{FC}.* V_{FC}/M_{FC} is the maximum speed at which the requirements of CS 25.143(f), 25.147(e), 25.175(b)(1), 25.177(a) through (c), and 25.181 must be met with wing-flaps and landing gear retracted. It may not be less than a speed midway between V_{MO}/M_{MO} and V_{DF}/M_{DF}, except that, for altitudes where Mach Number is the limiting factor, M_{FC} need not exceed the Mach Number at which effective speed warning occurs.

AMC 25.253(a)(4) Lateral Control: Roll Capability

ED Decision 2003/2/RM

An acceptable method of demonstrating compliance with CS 25.253(a)(4) is as follows:

1 Establish a steady 20° banked turn at a speed close to V_{DF}/M_{DF} limited to the extent necessary to accomplish the following manoeuvre and recovery without exceeding V_{DF}/M_{DF}. Using lateral control alone, it should be demonstrated that the aeroplane can be rolled to 20° bank angle in the other direction in not more than 8 seconds. The demonstration should be made in the most adverse direction. The manoeuvre may be unchecked.

2 For aeroplanes that exhibit an adverse effect on roll rate when rudder is used, it should also be demonstrated that use of rudder in a conventional manner will not result in a roll capability significantly below that specified above.

3 Conditions for 1 and 2:

Wing-flaps retracted.

Speedbrakes retracted and extended.

Landing gear retracted.

Trim. The aeroplane trimmed for straight flight at V_{MO}/M_{MO}. The trimming controls should not be moved during the manoeuvre.

Power:

(i) All engines operating at the power required to maintain level flight at V_{MO}/M_{MO}, except that maximum continuous power need not be exceeded; and

(ii) if the effect of power is significant, with the throttles closed.

AMC 25.253(a)(5) High Speed Characteristics

ED Decision 2003/2/RM

Extension of Speedbrakes. The following guidance is provided to clarify the meaning of the words "the available range of movements of the pilot's control" in CS 25.253(a)(5) and to provide guidance for demonstrating compliance with this requirement. Normally, the available range of movements of the pilot's control includes the full physical range of movements of the speedbrake control (i.e., from stop to stop). Under some circumstances, however, the available range of the pilot's control may be restricted to a lesser range associated with in-flight use of the speedbrakes. A means to limit the

available range of movement to an in-flight range may be acceptable if it provides an unmistakable tactile cue to the pilot when the control reaches the maximum allowable in-flight position, and compliance with CS 25.697(b) is shown for positions beyond the in-flight range. Additionally, the applicant's recommended procedures and training must be consistent with the intent to limit the in-flight range of movements of the speedbrake control.

CS 25.697(b) requires that lift and drag devices intended for ground operation only must have means to prevent the inadvertent operation of their controls in flight if that operation could be hazardous. If speedbrake operation is limited to an in-flight range, operation beyond the in-flight range of available movement of the speedbrake control must be shown to be not hazardous. Two examples of acceptable unmistakable tactile cues for limiting the in-flight range are designs incorporating either a gate, or incorporating both a detent and a substantial increase in force to move the control beyond the detent. It is not an acceptable means of compliance to restrict the use of, or available range of, the pilot's control solely by means of an aeroplane Flight Manual limitation or procedural means.

The effect of extension of speedbrakes may be evaluated during other high speed testing and during the development of emergency descent procedures. It may be possible to infer compliance with CS 25.253(a)(5) by means of this testing. To aid in determining compliance with the qualitative requirements of this rule, the following quantitative values may be used as a generally acceptable means of compliance. A load factor should be regarded as excessive if it exceeds 2.0. A nose-down pitching moment may be regarded as small if it necessitates an incremental control force of less than 89 N (20 lbf) to maintain 1g flight. These values may not be appropriate for all aeroplanes, and depend on the characteristics of the particular aeroplane design in high speed flight. Other means of compliance may be acceptable, provided that the Agency finds that compliance has been shown to the qualitative requirements specified in CS 25.253(a)(5).

CS 25.255 Out-of-trim characteristics

ED Decision 2003/2/RM

(a) From an initial condition with the aeroplane trimmed at cruise speeds up to V_{MO}/M_{MO}, the aeroplane must have satisfactory manoeuvring stability and controllability with the degree of out-of-trim in both the aeroplane nose-up and nose-down directions, which results from the greater of –

(1) A three-second movement of the longitudinal trim system at its normal rate for the particular flight condition with no aerodynamic load (or an equivalent degree of trim for aeroplanes that do not have a power-operated trim system), except as limited by stops in the trim system, including those required by CS 25.655(b) for adjustable stabilisers; or

(2) The maximum mistrim that can be sustained by the autopilot while maintaining level flight in the high speed cruising condition.

(b) In the out-of-trim condition specified in sub-paragraph (a) of this paragraph, when the normal acceleration is varied from + 1 g to the positive and negative values specified in sub-paragraph (c) of this paragraph –

(1) The stick force vs. g curve must have a positive slope at any speed up to and including V_{FC}/M_{FC}; and

(2) At speeds between V_{FC}/M_{FC} and V_{DF}/M_{DF}, the direction of the primary longitudinal control force may not reverse.

(c) Except as provided in sub-paragraphs (d) and (e) of this paragraph compliance with the provisions of sub-paragraph (a) of this paragraph must be demonstrated in flight over the acceleration range –

(1) –1g to 2·5 g; or

(2) 0 g to 2·0 g, and extrapolating by an acceptable method to – 1 g and 2·5 g.

(d) If the procedure set forth in sub-paragraph (c)(2) of this paragraph is used to demonstrate compliance and marginal conditions exist during flight test with regard to reversal of primary longitudinal control force, flight tests must be accomplished from the normal acceleration at which a marginal condition is found to exist to the applicable limit specified in sub-paragraph (c)(1) of this paragraph.

(e) During flight tests required by subparagraph (a) of this paragraph the limit manoeuvring load factors prescribed in CS 25.333(b) and 25.337, and the manoeuvring load factors associated with probable inadvertent excursions beyond the boundaries of the buffet onset envelopes determined under CS 25.251(e), need not be exceeded. In addition, the entry speeds for flight test demonstrations at normal acceleration values less than 1 g must be limited to the extent necessary to accomplish a recovery without exceeding V_{DF}/M_{DF}.

(f) In the out-of-trim condition specified in sub-paragraph (a) of this paragraph, it must be possible from an overspeed condition at V_{DF}/M_{DF}, to produce at least 1·5 g for recovery by applying not more than 556 N (125 lbf) of longitudinal control force using either the primary longitudinal control alone or the primary longitudinal control and the longitudinal trim system. If the longitudinal trim is used to assist in producing the required load factor, it must be shown at V_{DF}/M_{DF} that the longitudinal trim can be actuated in the aeroplane nose-up direction with the primary surface loaded to correspond to the least of the following aeroplane nose-up control forces:

(1) The maximum control forces expected in service as specified in CS 25.301 and 25.397.

(2) The control force required to produce 1·5 g.

(3) The control force corresponding to buffeting or other phenomena of such intensity that it is a strong deterrent to further application of primary longitudinal control force.

AMC 25.255 Out-of-trim characteristics

ED Decision 2003/2/RM

1 *Amount of Out-of-trim Required*

1.1 The equivalent degree of trim, specified in CS 25.255(a)(1) for aeroplanes which do not have a power-operated longitudinal trim system, has not been specified in quantitative terms, and the particular characteristics of each type of aeroplane must be considered. The intent of the requirement is that a reasonable amount of out-of-trim should be investigated, such as might occasionally be applied by a pilot.

1.2 In establishing the maximum mistrim that can be sustained by the autopilot the normal operation of the autopilot and associated systems should be taken into consideration. Where the autopilot is equipped with an auto-trim function the amount of mistrim which can be sustained will generally be small or zero. If there is no auto-trim function, consideration should be given to the maximum amount of out-of-trim which can be sustained by the elevator servo without causing autopilot disconnect.

2 *Datum Trim Setting*

2.1 For showing compliance with CS 25.255(b)(1) for speeds up to V_{MO}/M_{MO}, the datum trim setting should be the trim setting required for trimmed flight at the particular speed at which the demonstration is to be made.

2.2 For showing compliance with CS 25.255(b)(1) for speeds from V_{MO}/M_{MO} to V_{FC}/M_{FC}, and for showing compliance with CS 25.255(b)(2) and (f), the datum trim setting should be the trim setting required for trimmed flight at V_{MO}/M_{MO}.

3 *Reversal of Primary Longitudinal Control Force at Speeds greater than V_{FC}/M_{FC}*

3.1 CS 25.255(b)(2) requires that the direction of the primary longitudinal control force may not reverse when the normal acceleration is varied, for +1 g to the positive and negative values specified, at speeds above V_{FC}/M_{FC}. The intent of the requirement is that it is permissible that there is a value of g for which the stick force is zero, provided that the stick force versus g curve has a positive slope at that point (see Figure 1).

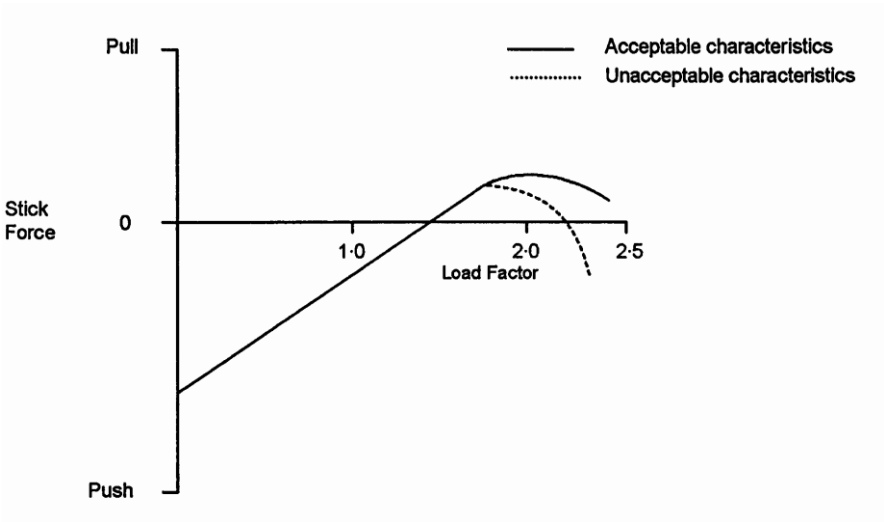

FIGURE 1

3.2 If stick force characteristics are marginally acceptable, it is desirable that there should be no reversal of normal control sensing, i.e. an aft movement of the control column should produce an aircraft motion in the nose-up direction and a change in aircraft load factor in the positive direction, and a forward movement of the control column should change the aircraft load factor in the negative direction.

3.3 It is further intended that reversals of direction of stick force with negative stick-force gradients should not be permitted in any mistrim condition within the specified range of mistrim. If test results indicate that the curves of stick force versus normal acceleration with the maximum required mistrim have a negative gradient of speeds above V_{FC}/M_{FC} then additional tests may be necessary. The additional tests should verify that the curves of stick force versus load factor with mistrim less than the maximum required do not unacceptably reverse, as illustrated in the upper curve of Figure 2. Control force characteristics as shown in Figure 3, may be considered acceptable, provided that the control sensing does not reverse (see paragraph 3.2)

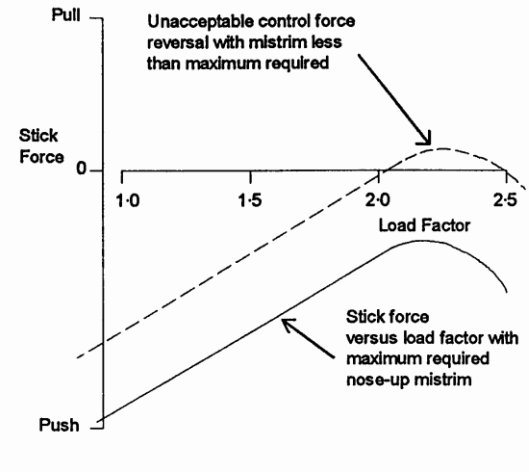

FIGURE 2

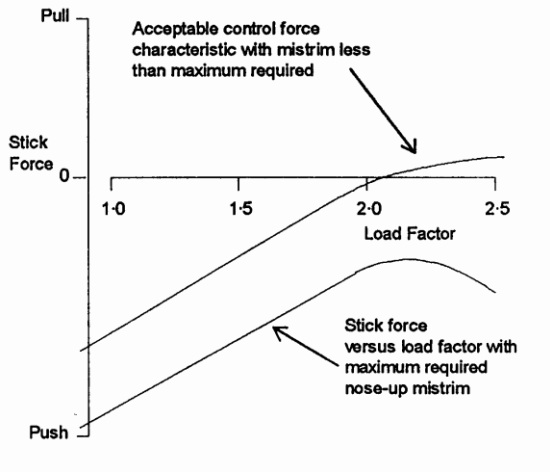

FIGURE 3

4 *Probable Inadvertent Excursions beyond the Boundaries of the Buffet Onset Envelopes.* CS 25.255(e) states that manoeuvring load factors associated with probable inadvertent excursions beyond the boundaries of the buffet onset envelopes determined under CS 25.251(e) need not be exceeded. It is intended that test flights need not be continued beyond a level of buffet which is sufficiently severe that a pilot would be reluctant to apply any further increase in load factor.

5 *Use of the Longitudinal Trim System to Assist Recovery*

5.1 CS 25.255(f) requires the ability to produce at least 1·5 g for recovery from an overspeed condition of V_{DF}/M_{DF}, using either the primary longitudinal control alone or the primary longitudinal control and the longitudinal trim system. Although the longitudinal trim system may be used to assist in producing the required normal acceleration, it is not acceptable for recovery to be completely dependent upon the use of this system. It should be possible to produce 1·2 g by applying not more than 556 N (125 lbf) of longitudinal control force using the primary longitudinal control alone.

5.2 Recovery capability is generally critical at altitudes where airspeed (V_{DF}) is limiting. If at higher altitudes (on the M_{DF} boundary) the manoeuvre capability is limited by buffeting of such an intensity that it is a strong deterrent to further increase in normal acceleration, some reduction of manoeuvre capability will be acceptable, provided that it does not reduce to below 1·3 g. The entry speed for flight test demonstrations of compliance with this requirement should be limited to the extent necessary to accomplish a recovery without exceeding V_{DF}/M_{DF}, and the normal acceleration should be measured as near to V_{DF}/M_{DF} as is practical.

SUBPART C – STRUCTURE

GENERAL

CS 25.301 Loads

ED Decision 2005/006/R

(a) Strength requirements are specified in terms of limit loads (the maximum loads to be expected in service) and ultimate loads (limit loads multiplied by prescribed factors of safety). Unless otherwise provided, prescribed loads are limit loads.

(b) Unless otherwise provided the specified air, ground, and water loads must be placed in equilibrium with inertia forces, considering each item of mass in the aeroplane. These loads must be distributed to conservatively approximate or closely represent actual conditions. (See AMC No. 1 to CS 25.301(b).) Methods used to determine load intensities and distribution must be validated by flight load measurement unless the methods used for determining those loading conditions are shown to be reliable. (See AMC No. 2 to CS 25.301(b).)

(c) If deflections under load would significantly change the distribution of external or internal loads, this redistribution must be taken into account.

[Amdt 25/1]

AMC No. 1 to 25.301(b) Loads

ED Decision 2005/006/R

The engine and its mounting structure are to be stressed to the loading cases for the aeroplane as a whole.

[Amdt 25/1]

AMC No. 2 to 25.301(b) Flight Load Validation

ED Decision 2005/006/R

1. PURPOSE

This AMC sets forth an acceptable means, but not the only means, of demonstrating compliance with the provisions of CS-25 related to the validation, by flight load measurements, of the methods used for determination of flight load intensities and distributions, for large aeroplanes.

2. RELATED CERTIFICATIONS SPECIFICATIONS

CS 25.301(b) “Loads”

CS 25.459 “Special Devices”

3. BACKGROUND

(a) CS-25 stipulates a number of load conditions, such as flight loads, ground loads, pressurisation loads, inertia loads and engine/APU loads. CS 25.301 requires methods used to determine load intensities and distributions to be validated by flight load measurements unless the methods used for determining those loading conditions are shown to be reliable. Although this applies to all load conditions of CS-25, the scope of this AMC is limited to flight loads.

(b) The sizing of the structure of the aircraft generally involves a number of steps and requires detailed knowledge of air loads, mass, stiffness, damping, flight control system characteristics, etc. Each of these steps and items may involve its own validation. The scope of this AMC however is limited to validation of methods used for determination of loads intensities and distributions by flight load measurements.

(c) By reference to validation of "methods", CS 25.301(b) and this AMC are intended to convey a validation of the complete package of elements involved in the accurate representation of loads, including input data and analytical process. The aim is to demonstrate that the complete package delivers reliable or conservative calculated loads for scenarios relevant to CS-25 flight loads requirements.

(d) Some measurements may complement (or sometimes even replace) the results from theoretical methods and models. Some flight loads development methods such as those used to develop buffeting loads have very little theoretical foundation, or are methods based directly on flight loads measurements extrapolated to represent limit conditions.

4. NEED FOR AND EXTENT OF FLIGHT LOAD MEASUREMENTS

4.1. General

(a) The need for and extent of the flight load measurements has to be discussed and agreed between the Agency and Applicant on a case by case basis. Such an assessment should be based on:

(i) a comparison of the design features of the aeroplane under investigation with previously developed (by the Applicant) and approved aeroplanes. New or significantly different design features should be identified and assessed.

(ii) the Applicant's previous experience in validating load intensities and distributions derived from analytical methods and/or wind tunnel tests. This experience should have been accumulated on previously developed (by the Applicant) and approved types and models of aeroplanes. The validation should have been by a flight load measurement program that was conducted by the Applicant and found acceptable to the Agency for showing compliance.

(iii) the sensitivity to parametric variation and continued applicability of the analytical methods and/or wind tunnel test data.

(b) Products requiring a new type certificate will in general require flight-test validation of flight loads methods unless the Applicant can demonstrate to the Agency that this is unnecessary.

If the configuration under investigation is a similar configuration and size as a previously developed and approved design, the use of analytical methods, such as computational fluid dynamics validated on wind tunnel test results and supported by previous load validation flight test experience, may be sufficient to determine flight loads without further flight test validation.

(c) Applicants who are making a change to a Type Certificated airplane, but who do not have access to the Type certification flight loads substantiation for that airplane, will be required to develop flight loads analyses, as necessary, to substantiate the change.

In general, the loads analyses will require validation and may require flight test loads measurements, as specified in this AMC.

(d) The Applicant is encouraged to submit supporting data or test plans for demonstrating the reliability of the flight loads methods early in the certification planning process.

4.2. New or significantly different design features.

Examples of new or significantly different design features include, but are not limited to:

– Wing mounted versus fuselage mounted engines;

– Two versus three or more engines;

– Low versus high wing;

– Conventional versus T-tail empennage;

– First use of significant sweep;

– Significant expansion of flight envelope;

– Addition of winglets;

– Significant modification of control surface configuration;

– Significant differences in airfoil shape, size (span, area);

– Significant changes in high lift configurations;

– Significant changes in power plant installation/configuration;

– Large change in the size of the aeroplane.

4.3. Other considerations

(a) Notwithstanding the similarity of the aeroplane or previous load validation flight test experience of the Applicant, the local loads on the following elements are typically unreliably predicted and may require a measurement during flight tests:

– Loads on high lift devices;

– Hinge moments on control surfaces;

– Loads on the empennage due to buffeting;

– Loads on any unusual device.

(b) For non-deterministic loading conditions, such as stall buffet, the applicant should compile a sufficient number of applicable flight loads measurements to develop a reliable method to predict the appropriate design load.

5. FLIGHT LOAD MEASUREMENTS

5.1. Measurements.

Flight load measurements (for example, through application of strain gauges, pressure belts, accelerometers) may include:

– Pressures / air loads /net shear, bending and torque on primary aerodynamic surfaces;

– Flight mechanics parameters necessary to correlate the analytical model with flight test results;

– High lift devices loads and positions;

– Primary control surface hinge moments and positions;

– Unsymmetric loads on the empennage (due to roll/yaw manoeuvres and buffeting);

– Local strains or response measurements in cases where load calculations or measurements are indeterminate or unreliable.

5.2. Variation of parameters.

The test points for the flight loads measurements should consider the variation of the main parameters affecting the loads under validation. Examples of these parameters include: load factor, speeds, altitude, aircraft c.g., weight and inertia, power settings (thrust, for wing mounted engines), fuel loading, speed brake settings, flap settings and gear conditions (up/down) within the design limits of the aeroplane. The range of variation of these parameters must be sufficient to allow the extrapolation to the design loads conditions. In general, the flight test conditions need not exceed approximately 80% of limit load.

5.3. Conditions.

In the conduct of flight load measurements, conditions used to obtain flight loads may include:

– Pitch manoeuvres including wind-up turns, pull-ups and push-downs (e.g. for wing and horizontal stabiliser manoeuvring loads);

– Stall entry or buffet onset boundary conditions (e.g. for horizontal stabiliser buffet loads);

– Yaw manoeuvres including rudder inputs and steady sideslips;

– Roll manoeuvres.

Some flight load conditions are difficult to validate by flight load measurements, simply because the required input (e.g. gust velocity) cannot be accurately controlled or generated. Therefore, these type of conditions need not be flight tested. Also, in general, failures, malfunctions or adverse conditions are not subject to flight tests for the purpose of flight loads validation.

5.4. Load alleviation.

When credit has been taken for an active load alleviation function by a particular control system, the effectiveness of this function should be demonstrated as far as practicable by an appropriate flight test program.

6. RESULTS OF FLIGHT LOAD MEASUREMENTS

6.1. Comparison / Correlation.

Flight loads are not directly measured, but are determined through correlation with measured strains, pressures or accelerations. The load intensities and distributions derived from flight testing should be compared with those obtained from analytical methods. The uncertainties in both the flight testing measurements and subsequent correlation should be carefully considered and compared with the inherent assumptions and capabilities of the process used in analytic derivation of flight loads. Since in most cases the flight test points are not the limit design load conditions, new analytical load cases need to be generated to match the actual flight test data points.

6.2. Quality of measurements.

Factors which can affect the uncertainty of flight loads resulting from calibrated strain gauges include the effects of temperature, structural non-linearities, establishment of flight/ground zero reference, and large local loads, such as those resulting from the propulsion system installation, landing gear, flap tracks or actuators. The static or dynamic nature of the loading can also affect both strain gauge and pressure measurements.

6.3. Quality of correlation.

A given correlation can provide a more or less reliable estimate of the actual loading condition depending on the "static" or "flexible dynamic" character of the loading action, or on the presence and level of large local loads. The quality of the achieved correlation depends also on the skills and experience of the Applicant in the choice of strain gauge locations and conduct of the calibration test programme.

Useful guidance on the calibration and selection of strain gauge installations in aircraft structures for flight loads measurements can be found, but not exclusively, in the following references:

1. Skopinski, T.H., William S. Aiken, Jr., and Wilbur B. Huston,

   "Calibration of Strain-Gage Installations in Aircraft Structures for Measurement of Flight Loads", NACA Report 1178, 1954.

2. Sigurd A. Nelson II, "Strain Gage Selection in Loads Equations Using a Genetic Algorithm", NASA Contractor Report 4597 (NASA-13445), October 1994.

6.4. Outcome of comparison / correlation.

Whatever the degree of correlation obtained, the Applicant is expected to be able to justify the elements of the correlation process, including the effects of extrapolation of the actual test conditions to the design load conditions.

If the correlation is poor, and especially if the analysis underpredicts the loads, then the Applicant should review and assess all of the components of the analysis, rather than applying blanket correction factors.

For example:

(a) If the level of discrepancy varies with the Mach number of the condition, then the Mach corrections need to be evaluated and amended.

(b) If conditions with speed brakes extended show poorer correlation than clean wing, then the speed brake aerodynamic derivatives and/or spanwise distribution need to be evaluated and amended.

[Amdt 25/1]

CS 25.302 Interaction of systems and structures

ED Decision 2005/006/R

For aeroplanes equipped with systems that affect structural performance, either directly or as a result of a failure or malfunction, the influence of these systems and their failure conditions must be taken into account when showing compliance with the requirements of Subparts C and D. Appendix K of CS-25 must be used to evaluate the structural performance of aeroplanes equipped with these systems.

[Amdt 25/1]

CS 25.303 Factor of safety

ED Decision 2003/2/RM

Unless otherwise specified, a factor of safety of 1·5 must be applied to the prescribed limit load which are considered external loads on the structure. When loading condition is prescribed in terms of ultimate loads, a factor of safety need not be applied unless otherwise specified.

CS 25.305 Strength and deformation

ED Decision 2005/006/R

(a) The structure must be able to support limit loads without detrimental permanent deformation. At any load up to limit loads, the deformation may not interfere with safe operation.

(b) The structure must be able to support ultimate loads without failure for at least 3 seconds. However, when proof of strength is shown by dynamic tests simulating actual load conditions, the 3-second limit does not apply. Static tests conducted to ultimate load must include the ultimate deflections and ultimate deformation induced by the loading. When analytical methods are used to show compliance with the ultimate load strength requirements, it must be shown that –

(1) The effects of deformation are not significant;

(2) The deformations involved are fully accounted for in the analysis; or

(3) The methods and assumptions used are sufficient to cover the effects of these deformations.

(c) Where structural flexibility is such that any rate of load application likely to occur in the operating conditions might produce transient stresses appreciably higher than those corresponding to static loads, the effects of this rate of application must be considered.

(d) *Reserved*

(e) The aeroplane must be designed to withstand any vibration and buffeting that might occur in any likely operating condition up to V_D/M_D, including stall and probable inadvertent excursions beyond the boundaries of the buffet onset envelope. This must be shown by analysis, flight tests, or other tests found necessary by the Agency.

(f) Unless shown to be extremely improbable, the aeroplane must be designed to withstand any forced structural vibration resulting from any failure, malfunction or adverse condition in the flight control system. These loads must be treated in accordance with the requirements of CS 25.302.

[Amdt 25/1]

CS 25.307 Proof of structure

ED Decision 2005/006/R

(a) Compliance with the strength and deformation requirements of this Subpart must be shown for each critical loading condition. Structural analysis may be used only if the structure conforms to that for which experience has shown this method to be reliable. In other cases, substantiating tests must be made to load levels that are sufficient to verify structural behaviour up to loads specified in CS 25.305.

(b) Reserved

(c) Reserved

(d) When static or dynamic tests are used to show compliance with the requirements of CS 25.305(b) for flight structures, appropriate material correction factors must be applied to the test results, unless the structure, or part thereof, being tested has features such that a number of elements contribute to the total strength of the structure and the failure of one element results in the redistribution of the load through alternate load paths.

[Amdt 25/1]

AMC 25.307 Proof of structure

ED Decision 2005/006/R

1. *Purpose*

This AMC establishes methods of compliance with CS 25.307, which specifies the requirements for Proof of Structure.

2. *Related Certification Specifications*

CS 25.303 "Factor of safety"

CS 25.305 "Strength and deformation"

CS 25.651 "Proof of strength"

3. *Definitions*

3.1. Detail. A structural element of a more complex structural member (e.g. joints, splices, stringers, stringer run-outs, or access holes).

3.2. Sub Component. A major three-dimensional structure which can provide complete structural representation of a section of the full structure (e.g., stub-box, section of a spar, wing panel, wing rib, body panel, or frames).

3.3. Component. A major section of the airframe structure (e.g., wing, body, fin, horizontal stabiliser) which can be tested as a complete unit to qualify the structure.

3.4. Full Scale. Dimensions of test article are the same as design; fully representative test specimen (not necessarily complete airframe).

3.5. New Structure. Structure for which behaviour is not adequately predicted by analysis supported by previous test evidence. Structure that utilises significantly different structural design concepts such as details, geometry, structural arrangements, and load paths or materials from previously tested designs.

3.6. Similar New Structure. Structure that utilises similar or comparable structural design concepts such as details, geometry, structural arrangements, and load paths concepts and materials to an existing tested design.

3.7. Derivative/Similar Structure. Structure that uses structural design concepts such as details, geometry, structural arrangements, and load paths, stress levels and materials that are nearly identical to those on which the analytical methods have been validated.

3.8. Previous Test Evidence. Testing of the original structure that is sufficient to verify structural behaviour in accordance with CS 25.305.

4. *Introduction*

As required by subparagraph (a) of CS 25.307, the structure must be shown to comply with the strength and deformation requirements of Subpart C of CS-25. This means that the structure must:

(a) be able to support limit loads without detrimental permanent deformation, and:

(b) be able to support ultimate loads without failure.

This implies the need of a comprehensive assessment of the external loads (addressed by CS 25.301), the resulting internal strains and stresses, and the structural allowables.

CS 25.307 requires compliance for each critical loading condition. Compliance can be shown by analysis supported by previous test evidence, analysis supported by new test evidence or by test only. As compliance by test only is impractical in most cases, a large portion of the substantiating data will be based on analysis.

There are a number of standard engineering methods and formulas which are known to produce acceptable, often conservative results especially for structures where load paths are well defined. Those standard methods and formulas, applied with a good understanding of their limitations, are considered reliable analyses when showing compliance with CS 25.307. Conservative assumptions may be considered in assessing whether or not an analysis may be accepted without test substantiation.

The application of methods such as Finite Element Method or engineering formulas to complex structures in modern aircraft is considered reliable only when validated by full scale tests (ground and/or flight tests). Experience relevant to the product in the utilisation of such methods should be considered.

5. *Classification of structure*

(a) The structure of the product should be classified into one of the following three categories:

– New Structure

– Similar New Structure

– Derivative/Similar Structure

(b) Justifications should be provided for classifications other than New Structure. Elements that should be considered are:

(i) The accuracy/conservatism of the analytical methods, and

(ii) Comparison of the structure under investigation with previously tested structure.

Considerations should include, but are not limited to the following:

– external loads (bending moment, shear, torque , etc.);

– internal loads (strains, stresses, etc.);

– structural design concepts such as details, geometry, structural arrangements, load paths;

– materials;

– test experience (load levels achieved, lessons learned);

– deflections;

– deformations;

– extent of extrapolation from test stress levels.

6. *Need and Extent of Testing*

The following factors should be considered in deciding the need for and the extent of testing including the load levels to be achieved:

(a) The classification of the structure (as above);

(b) The consequence of failure of the structure in terms of the overall integrity of the aeroplane;

(c) The consequence of the failure of interior items of mass and the supporting structure to the safety of the occupants.

Relevant service experience may be included in this evaluation.

7. *Certification Approaches*

The following certification approaches may be selected:

(a) Analysis, supported by new strength testing of the structure to limit and ultimate load. This is typically the case for New Structure.

Substantiation of the strength and deformation requirements up to limit and ultimate loads normally requires testing of sub-components, full scale components or full scale tests of assembled components (such as a nearly complete airframe). The entire test program should be considered in detail to assure the requirements for strength and deformation can be met up to limit load levels as well as ultimate load levels.

Sufficient limit load test conditions should be performed to verify that the structure meets the deformation requirements of CS 25.305(a) and to provide validation of internal load distribution and analysis predictions for all critical loading conditions.

Because ultimate load tests often result in significant permanent deformation, choices will have to be made with respect to the load conditions applied. This is usually based on the number of test specimens available, the analytical static strength margins of safety of the structure and the range of supporting detail or sub-component tests. An envelope approach may be taken, where a combination of different load cases is applied, each one critical for a different section of the structure.

These limit and ultimate load tests may be supported by detail and sub-component tests that verify the design allowables (tension, shear, compression) of the structure and often provide some degree of validation for ultimate strength.

(b) Analysis validated by previous test evidence and supported with additional limited testing. This is typically the case for Similar New Structure.

The extent of additional limited testing (number of specimens, load levels, etc.) will depend upon the degree of change, relative to the elements of paragraphs 5(b)(i) and (ii).

For example, if the changes to an existing design and analysis necessitate extensive changes to an existing test-validated finite element model (e.g. different rib spacing) additional testing may be needed. Previous test evidence can be relied upon whenever practical.

These additional limited tests may be further supported by detail and sub-component tests that verify the design allowables (tension, shear, compression) of the structure and often provide some degree of validation for ultimate strength.

(c) Analysis, supported by previous test evidence. This is typically the case for Derivative/ Similar Structure.

Justification should be provided for this approach by demonstrating how the previous static test evidence validates the analysis and supports showing compliance for the structure under investigation. Elements that need to be considered are those defined in paragraphs 5(b)(i) and (ii).

For example, if the changes to the existing design and test-validated analysis are evaluated to assure they are relatively minor and the effects of the changes are well understood, the original tests may provide sufficient validation of the analysis and further testing may not be necessary. For example, if a weight increase results in higher loads along with a corresponding increase in some of the element thickness and fastener sizes, and materials and geometry (overall configuration, spacing of structural members, etc.) remain generally the same, the revised analysis could be considered reliable based on the previous validation.

(d) Test only.

Sometimes no reliable analytical method exists, and testing must be used to show compliance with the strength and deformation requirements. In other cases it may be elected to show compliance solely by tests even if there are acceptable analytical methods. In either case, testing by itself can be used to show compliance with the strength and deformation requirements of CS-25 Subpart C. In such cases, the test load conditions should be selected to assure all critical design loads are encompassed.

If tests only are used to show compliance with the strength and deformation requirements for single load path structure which carries flight loads (including pressurisation loads), the test loads must be increased to account for variability in material properties, as required by CS 25.307(d). In lieu of a rational analysis, for metallic materials, a factor of 1.15 applied to the limit and ultimate flight loads may be used. If the structure has multiple load paths, no material correction factor is required.

8. *Interpretation of Data*

The interpretation of the substantiation analysis and test data requires an extensive review of:

1. the representativeness of the loading ;
2. the instrumentation data ;
3. comparisons with analytical methods ;
4. representativeness of the test article(s) ;
5. test set-up (fixture, load introductions) ;
6. load levels and conditions tested ;
7. test results.

Testing is used to validate analytical methods except when showing compliance by test only. If the test results do not correlate with the analysis, the reasons should be identified and appropriate action taken. This should be accomplished whether or not a test article fails below ultimate load.

Should a failure occur below ultimate load, an investigation should be conducted for the product to reveal the cause of this failure. This investigation should include a review of the test specimen and loads, analytical loads, and the structural analysis. This may lead to adjustment in analysis/modelling techniques and/or part redesign and may result in the need for additional testing. The need for additional testing to ensure ultimate load capability, depends on the degree to which the failure is understood and the analysis can be validated by the test.

[Amdt 25/1]

FLIGHT LOADS

CS 25.321 General

ED Decision 2003/2/RM

(a) Flight load factors represent the ratio of the aerodynamic force component (acting normal to the assumed longitudinal axis of the aeroplane) to the weight of the aeroplane. A positive load factor is one in which the aerodynamic force acts upward with respect to the aeroplane.

(b) Considering compressibility effects at each speed, compliance with the flight load requirements of this Subpart must be shown –

(1) At each critical altitude within the range of altitudes selected by the applicant;

(2) At each weight from the design minimum weight to the design maximum weight appropriate to each particular flight load condition; and

(3) For each required altitude and weight, for any practicable distribution of disposable load within the operating limitations recorded in the Aeroplane Flight Manual.

(c) Enough points on and within the boundaries of the design envelope must be investigated to ensure that the maximum load for each part of the aeroplane structure is obtained.

(d) The significant forces acting on the aeroplane must be placed in equilibrium in a rational or conservative manner. The linear inertia forces must be considered in equilibrium with the thrust and all aerodynamic loads, while the angular (pitching) inertia forces must be considered in equilibrium with thrust and all aerodynamic moments, including moments due to loads on components such as tail surfaces and nacelles. Critical thrust values in the range from zero to maximum continuous thrust must be considered.

FLIGHT MANOEUVRE AND GUST CONDITIONS

CS 25.331 Symmetric manoeuvring conditions

ED Decision 2003/2/RM

(a) *Procedure*. For the analysis of the manoeuvring flight conditions specified in sub-paragraphs (b) and (c) of this paragraph, the following provisions apply:

(1) Where sudden displacement of a control is specified, the assumed rate of control surface displacement may not be less than the rate that could be applied by the pilot through the control system.

(2) In determining elevator angles and chordwise load distribution in the manoeuvring conditions of sub-paragraphs (b) and (c) of this paragraph, the effect of corresponding pitching velocities must be taken into account. The in-trim and out-of-trim flight conditions specified in CS 25.255 must be considered.

(b) *Manoeuvring balanced conditions.* Assuming the aeroplane to be in equilibrium with zero pitching acceleration, the manoeuvring conditions A through I on the manoeuvring envelope in CS 25.333(b) must be investigated.

(c) *Manoeuvring pitching conditions*. The following conditions must be investigated:

(1) *Maximum pitch control displacement at V_A*. The aeroplane is assumed to be flying in steady level flight (point A1, CS 25.333(b)) and the cockpit pitch control is suddenly moved to obtain extreme nose up pitching acceleration. In defining the tail load, the response of the aeroplane must be taken into account. Aeroplane loads which occur subsequent to the time when normal acceleration at the c.g. exceeds the positive limit manoeuvring load factor (at point A2 in CS.333(b)), or the resulting tailplane normal load reaches its maximum, whichever occurs first, need not be considered.

(2) *Checked manoeuvre between V_A and V_D*. Nose up checked pitching manoeuvres must be analysed in which the positive limit load factor prescribed in CS 25.337 is achieved. As a separate condition, nose down checked pitching manoeuvres must be analysed in which a limit load factor of 0 is achieved. In defining the aeroplane loads the cockpit pitch control motions described in sub-paragraphs (i), (ii), (iii) and (iv) of this paragraph must be used:

(i) The aeroplane is assumed to be flying in steady level flight at any speed between V_A and V_D and the cockpit pitch control is moved in accordance with the following formula:

$$\delta(t) = \delta_1 \sin(\omega t) \;\; for \; 0 \leq t \; \leq \; t_{max}$$

where:

δ1 = the maximum available displacement of the cockpit pitch control in the initial direction, as limited by the control system stops, control surface stops, or by pilot effort in accordance with CS 25.397(b);

δ(t) = the displacement of the cockpit pitch control as a function of time. In the initial direction δ(t) is limited to δ_1. In the reverse direction, δ(t) may be truncated at the maximum available displacement of the cockpit pitch control as limited by the control system stops, control surface stops, or by pilot effort in accordance with CS 25.397(b);

$t_{max} = 3\pi/2\omega$;

ω = the circular frequency (radians/second) of the control deflection taken equal to the undamped natural frequency of the short period rigid mode of the aeroplane, with active control system effects included where appropriate; but not less than:

$$\omega = \frac{\pi V}{2V_A} \;\; radians\ per\ second;$$

where:

V = the speed of the aeroplane at entry to the manoeuvre.

V_A = the design manoeuvring speed prescribed in CS 25.335(c)

(ii) For nose-up pitching manoeuvres the complete cockpit pitch control displacement history may be scaled down in amplitude to the extent just necessary to ensure that the positive limit load factor prescribed in CS 25.337 is not exceeded. For nose-

down pitching manoeuvres the complete cockpit control displacement history may be scaled down in amplitude to the extent just necessary to ensure that the normal acceleration at the c.g. does not go below 0g.

(iii) In addition, for cases where the aeroplane response to the specified cockpit pitch control motion does not achieve the prescribed limit load factors then the following cockpit pitch control motion must be used:

$$\delta(t) = \delta_1 \sin(\omega t) \;\; for \;\; 0 \le t \le t_1$$
$$\delta(t) = \delta_1 \;\; for \;\; t_1 \le t \le t_2$$
$$\delta(t) = \delta_1 \sin(\omega[t + t_1 - t_2]) \;\; for \;\; t_2 \le t \le t_{max}$$

where:

$t_1 = \pi/2\omega$

$t_2 = t_1 + \Delta t$

$t_{max} = t_2 + \pi/\omega$;

Δt = the minimum period of time necessary to allow the prescribed limit load factor to be achieved in the initial direction, but it need not exceed five seconds (see figure below).

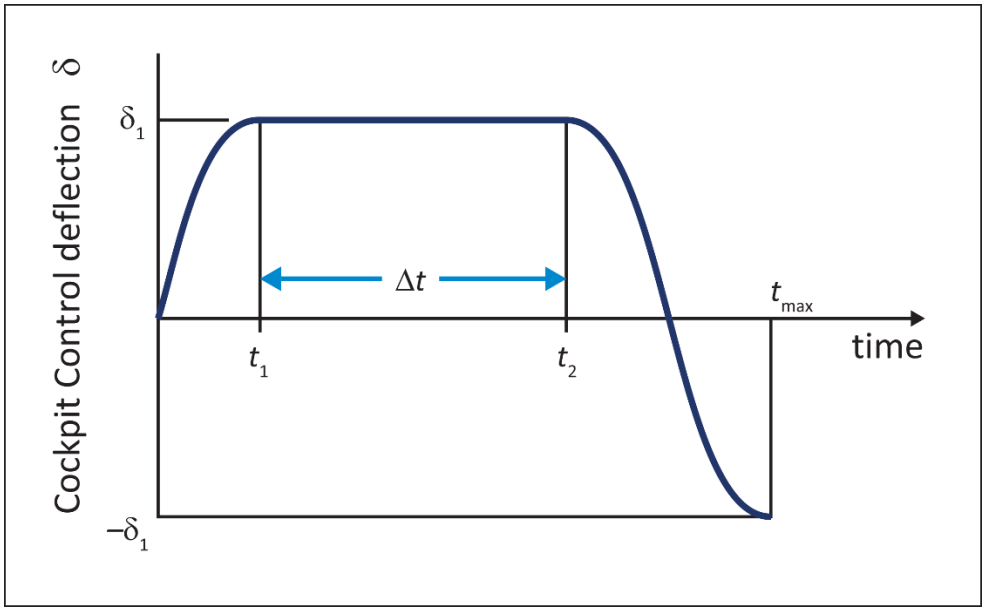

(iv) In cases where the cockpit pitch control motion may be affected by inputs from systems (for example, by a stick pusher that can operate at high load factor as well as at 1g) then the effects of those systems must be taken into account.

(v) Aeroplane loads that occur beyond the following times need not be considered:

(A) For the nose-up pitching manoeuvre, the time at which the normal acceleration at the c.g. goes below 0g;

(B) For the nose-down pitching manoeuvre, the time at which the normal acceleration at the c.g. goes above the positive limit load factor prescribed in CS 25.337;

(C) t_{max}.

CS 25.333 Flight manoeuvring envelope

ED Decision 2003/2/RM

(a) *General.* The strength requirements must be met at each combination of airspeed and load factor on and within the boundaries of the representative manoeuvring envelope (V-n diagram) of sub-paragraph (b) of this paragraph. This envelope must also be used in determining the aeroplane structural operating limitations as specified in CS 25.1501.

(b) *Manoeuvring envelope*

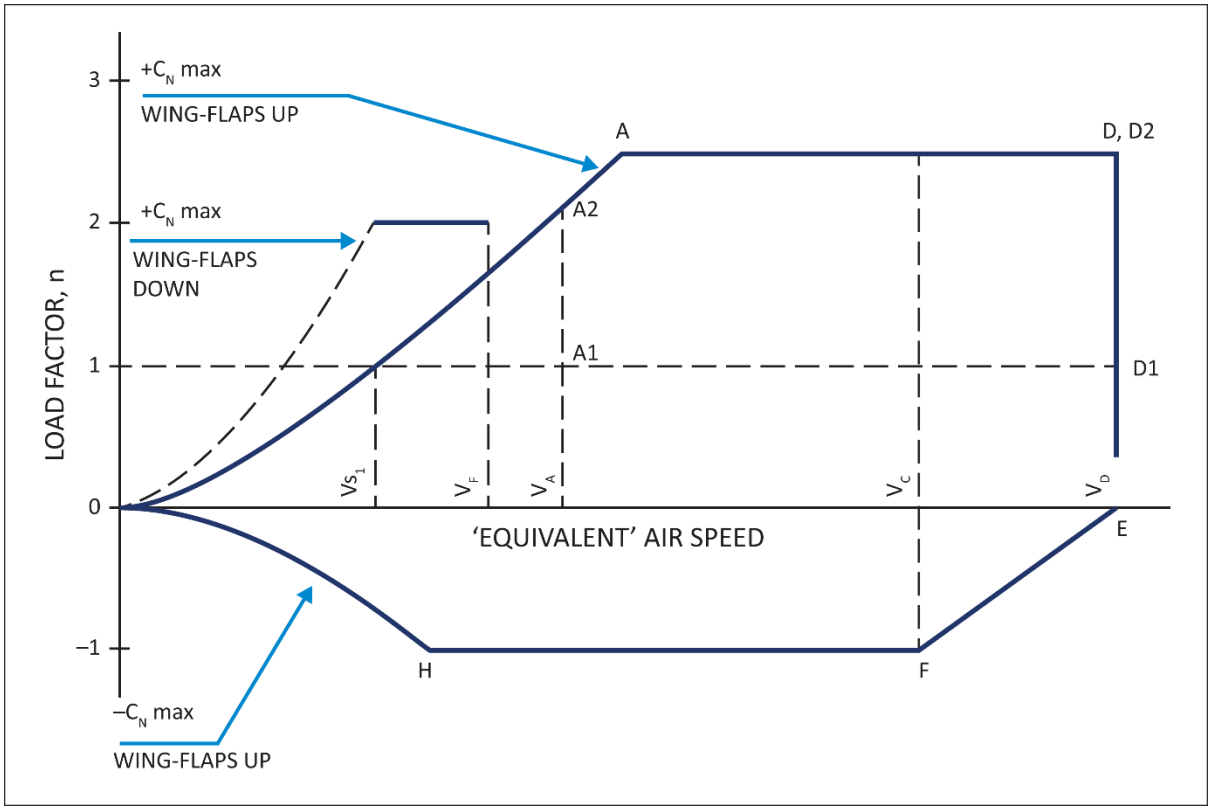

CS 25.335 Design airspeeds

ED Decision 2003/2/RM

The selected design airspeeds are equivalent airspeeds (EAS). Estimated values of V_{S0} and V_{S1} must be conservative.

(a) *Design cruising speed*, V_C. For V_C, the following apply:

(1) The minimum value of V_C must be sufficiently greater than V_B to provide for inadvertent speed increases likely to occur as a result of severe atmospheric turbulence.

(2) Except as provided in sub-paragraph 25.335(d)(2), V_C may not be less than $V_B + 1{\cdot}32\ U_{ref}$ (with U_{ref} as specified in sub-paragraph 25.341(a)(5)(i). However, V_C need not exceed the maximum speed in level flight at maximum continuous power for the corresponding altitude.

(3) At altitudes where V_D is limited by Mach number, V_C may be limited to a selected Mach number. (See CS 25.1505.)

(b) *Design dive speed, V_D*. V_D must be selected so that V_C/M_C is not greater than 0·8 V_D/M_D, or so that the minimum speed margin between V_C/M_C and V_D/M_D is the greater of the following values:

(1) From an initial condition of stabilised flight at V_C/M_C, the aeroplane is upset, flown for 20 seconds along a flight path 7·5° below the initial path, and then pulled up at a load factor of 1·5 g (0·5 g acceleration increment). The speed increase occurring in this manoeuvre may be calculated if reliable or conservative aerodynamic data issued. Power as specified in CS 25.175(b)(1)(iv) is assumed until the pullup is initiated, at which time power reduction and the use of pilot controlled drag devices may be assumed;

(2) The minimum speed margin must be enough to provide for atmospheric variations (such as horizontal gusts, and penetration of jet streams and cold fronts) and for instrument errors and airframe production variations. These factors may be considered on a probability basis. The margin at altitude where M_C is limited by compressibility effects must not be less than 0.07M unless a lower margin is determined using a rational analysis that includes the effects of any automatic systems. In any case, the margin may not be reduced to less than 0.05M. (See AMC 25.335(b)(2))

(c) *Design manoeuvring speed, V_A*. For V_A, the following apply:

(1) V_A may not be less than $V_{S1}\sqrt{n}$ where –

(i) n is the limit positive manoeuvring load factor at V_C; and

(ii) V_{S1} is the stalling speed with wing-flaps retracted.

(2) V_A and V_S must be evaluated at the design weight and altitude under consideration.

(3) V_A need not be more than V_C or the speed at which the positive C_{Nmax} curve intersects the positive manoeuvre load factor line, whichever is less.

(d) Design speed for maximum gust intensity, V_B.

(1) V_B may not be less than

$$V_{s1}\left[1+\frac{K_g U_{ref} V_c a}{498w}\right]^{1/2}$$

where –

V_{sl} = the 1-g stalling speed based on C_{NAmax} with the flaps retracted at the particular weight under consideration;

C_{NAmax} = the maximum aeroplane normal force coefficient;

V_c = design cruise speed (knots equivalent airspeed);

U_{ref} = the reference gust velocity (feet per second equivalent airspeed) from CS 25.341(a)(5)(i);

w = average wing loading (pounds per square foot) at the particular weight under consideration.

$K_g = \frac{.88\mu}{5.3+\mu}$

$\mu = \frac{2w}{\rho\, cag}$

ρ = density of air (slugs/ft^3);

c = mean geometric chord of the wing (feet);

g = acceleration due to gravity (ft/sec^2);

a = slope of the aeroplane normal force coefficient curve, C_{NA} per radian;

(2) At altitudes where V_c is limited by Mach number –

(i) V_B may be chosen to provide an optimum margin between low and high speed buffet boundaries; and,

(ii) V_B need not be greater than V_C.

(e) *Design wing-flap speeds, V_F.* For V_F, the following apply:

(1) The design wing-flap speed for each wing-flap position (established in accordance with CS 25.697(a)) must be sufficiently greater than the operating speed recommended for the corresponding stage of flight (including balked landings) to allow for probable variations in control of airspeed and for transition from one wing-flap position to another.

(2) If an automatic wing-flap positioning or load limiting device is used, the speeds and corresponding wing-flap positions programmed or allowed by the device may be used.

(3) V_F may not be less than –

(i) 1·6 V_{S1} with the wing-flaps in take-off position at maximum take-off weight;

(ii) 1·8 V_{S1} with the wing-flaps in approach position at maximum landing weight; and

(iii) 1·8 V_{S0} with the wing-flaps in landing position at maximum landing weight.

(f) *Design drag device speeds, V_{DD}.* The selected design speed for each drag device must be sufficiently greater than the speed recommended for the operation of the device to allow for probable variations in speed control. For drag devices intended for use in high speed descents, V_{DD} may not be less than V_D. When an automatic drag device positioning or load limiting means is used, the speeds and corresponding drag device positions programmed or allowed by the automatic means must be used for design.

AMC 25.335(b)(2) Design Dive Speed

ED Decision 2006/005/R

1. PURPOSE. This AMC sets forth an acceptable means, but not the only means, of demonstrating compliance with the provisions of CS-25 related to the minimum speed margin between design cruise speed and design dive speed.

2. RELATED CERTIFICATION SPECIFICATIONS. CS 25.335 "Design airspeeds".

3. BACKGROUND. CS 25.335(b) requires the design dive speed, V_D, of the aeroplane to be established so that the design cruise speed is no greater than 0.8 times the design dive speed, or that it be based on an upset criterion initiated at the design cruise speed, V_C. At altitudes where the cruise speed is limited by compressibility effects, CS 25.335(b)(2) requires the margin to be not less than 0.05 Mach. Furthermore, at any altitude, the margin must be great enough to provide for atmospheric variations (such as horizontal gusts and the penetration of jet streams), instrument errors, and production variations. This AMC provides a rational method for considering the atmospheric variations.

4. DESIGN DIVE SPEED MARGIN DUE TO ATMOSPHERIC VARIATIONS.

a. In the absence of evidence supporting alternative criteria, compliance with CS 25.335(b)(2) may be shown by providing a margin between V_C/M_C and V_D/M_D sufficient to provide for the following atmospheric conditions:

(1) Encounter with a Horizontal Gust. The effect of encounters with a substantially headon gust, assumed to act at the most adverse angle between 30 degrees above and 30 degrees below the flight path, should be considered. The gust velocity should be 15.2 m/s (50 fps) in equivalent airspeed (EAS) at altitudes up to 6096 m (20,000 feet). At altitudes above 6096 m (20,000 feet) the gust velocity may be reduced linearly from 15.2 m/s (50 fps) in EAS at 6096 m (20,000 feet) to 7.6 m/s (25 fps) in EAS at 15240 m (50,000 feet), above which the gust velocity is considered to be constant. The gust velocity should be assumed to build up in not more than 2 seconds and last for 30 seconds.

(2) Entry into Jetstreams or Regions of High Windshear.

(i) Conditions of horizontal and vertical windshear should be investigated taking into account the windshear data of this paragraph which are world-wide extreme values.

(ii) Horizontal windshear is the rate of change of horizontal wind speed with horizontal distance. Encounters with horizontal windshear change the aeroplane apparent head wind in level flight as the aeroplane traverses into regions of changing wind speed. The horizontal windshear region is assumed to have no significant vertical gradient of wind speed.

(iii) Vertical windshear is the rate of change of horizontal wind speed with altitude. Encounters with windshear change the aeroplane apparent head wind as the aeroplane climbs or descends into regions of changing wind speed. The vertical windshear region changes slowly so that temporal or spatial changes in the vertical windshear gradient are assumed to have no significant affect on an aeroplane in level flight.

(iv) With the aeroplane at V_C/M_C within normal rates of climb and descent, the most extreme condition of windshear that it might encounter, according to available meteorological data, can be expressed as follows:

(A) Horizontal Windshear. The jet stream is assumed to consist of a linear shear of 3.6 KTAS/NM over a distance of 25 NM or of 2.52 KTAS/NM over a distance of 50 NM or of 1.8 KTAS/NM over a distance of 100 NM, whichever is most severe.

(B) Vertical Windshear. The windshear region is assumed to have the most severe of the following characteristics and design values for windshear intensity and height band. As shown in Figure 1, the total vertical thickness of the windshear region is twice the height band so that the windshear intensity specified in Table 1 applies to a vertical distance equal to the height band above and below the reference altitude. The variation of horizontal wind speed with altitude in the windshear region is linear through the height band from zero at the edge of the region to a strength at the reference altitude determined by the windshear intensity multiplied by the height band. Windshear intensity varies linearly between the reference altitudes in Table 1.

Figure 1 - Windshear Region

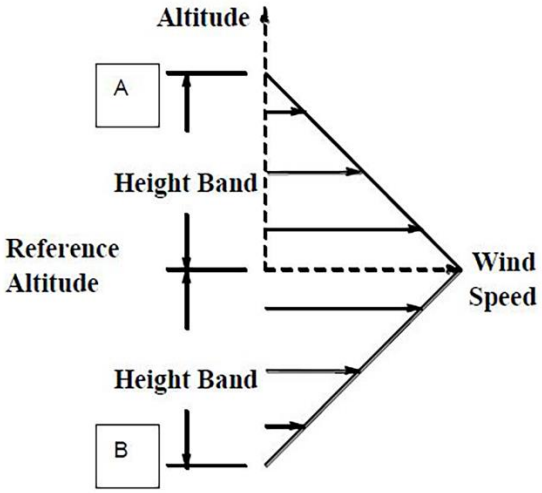

Note: The analysis should be conducted by separately descending from point "A" and climbing from point "B" into initially increasing headwind.

Table 1 - Vertical Windshear Intensity Characteristics

	Height Band - Ft.			
	1000	3000	5000	7000
Reference Altitude - Ft.	Vertical Windshear Units: ft./sec. per foot of height (KTAS per 1000 feet of height)			
0	0.095 (56.3)	0.05 (29.6)	0.035 (20.7)	0.03 (17.8)
40,000	0.145 (85.9)	0.075 (44.4)	0.055 (32.6)	0.04 (23.7)
45,000	0.265 (157.0)	0.135 (80.0)	0.10 (59.2)	0.075 (44.4)
Above 45,000	0.265 (157.0)	0.135 (80.0)	0.10 (59.2)	0.075 (44.4)
Windshear intensity varies linearly between specified altitudes.				

(v) The entry of the aeroplane into horizontal and vertical windshear should be treated as separate cases. Because the penetration of these large scale phenomena is fairly slow, recovery action by the pilot is usually possible. In the case of manual flight (i.e., when flight is being controlled by inputs made by the pilot), the aeroplane is assumed to maintain constant attitude until at least 3 seconds after the operation of the overspeed warning device, at which time recovery action may be started by using the primary aerodynamic controls and thrust at a normal acceleration of 1.5g, or the maximum available, whichever is lower.

b. At altitudes where speed is limited by Mach number, a speed margin of .07 Mach between M_C and M_D is considered sufficient without further investigation.

[Amdt 25/2]

CS 25.337 Limit manoeuvring load factors

ED Decision 2003/2/RM

(a) Except where limited by maximum (static) lift coefficients, the aeroplane is assumed to be subjected to symmetrical manoeuvres resulting in the limit manoeuvring load factors prescribed in this paragraph. Pitching velocities appropriate to the corresponding pull-up and steady turn manoeuvres must be taken into account.

(b) The positive limit manoeuvring load factor 'n' for any speed up to V_D may not be less than $2 \cdot 1 + \left(\frac{24\,000}{W+10\,000}\right)$except that 'n' may not be less than 2·5 and need not be greater than 3·8 – where 'W' is the design maximum take-off weight (lb).

(c) The negative limit manoeuvring load factor –

(1) May not be less than –1·0 at speeds up to V_C; and

(2) Must vary linearly with speed from the value at V_C to zero at V_D.

(d) Manoeuvring load factors lower than those specified in this paragraph may be used if the aeroplane has design features that make it impossible to exceed these values in flight.

AMC 25.337 Limit manoeuvring load factors

ED Decision 2003/2/RM

The load factor boundary of the manoeuvring envelope is defined by CS 25.337(b) and (c). It is recognised that constraints which may limit the aircraft's ability to attain the manoeuvring envelope load factor boundary may be taken into account in the calculation of manoeuvring loads for each unique mass and flight condition, provided that those constraints are adequately substantiated. This substantiation should take account of critical combinations of vertical, rolling and yawing manoeuvres that may be invoked either statically or dynamically within the manoeuvring envelope.

Examples of the aforementioned constraints include aircraft $C_{N\text{-}max}$, mechanical and/or aerodynamic limitations of the pitch control, and limitations defined within any flight control software.]

CS 25.341 Gust and turbulence loads

ED Decision 2005/006/R

(a) *Discrete Gust Design Criteria.* The aeroplane is assumed to be subjected to symmetrical vertical and lateral gusts in level flight. Limit gust loads must be determined in accordance with the following provisions:

(1) Loads on each part of the structure must be determined by dynamic analysis. The analysis must take into account unsteady aerodynamic characteristics and all significant structural degrees of freedom including rigid body motions.

(2) The shape of the gust must be taken as follows:

$U = \frac{U_{ds}}{2}\left[1 - \cos\left(\frac{\pi s}{H}\right)\right]$ for 0 ≤ s ≤ 2H

$U = 0$ for s > 2H

where –

s = distance penetrated into the gust (metre);

U_{ds} = the design gust velocity in equivalent airspeed specified in sub-paragraph (a) (4) of this paragraph;

H = the gust gradient which is the distance (metre) parallel to the aeroplane's flight path for the gust to reach its peak velocity.

(3) A sufficient number of gust gradient distances in the range 9 m (30 feet) to 107 m (350 feet) must be investigated to find the critical response for each load quantity.

(4) The design gust velocity must be:

$$U_{ds} = U_{ref}\, F_g \left({}^{H}/_{350} \right)^{1/6}$$

where –

U_{ref} = the reference gust velocity in equivalent airspeed defined in sub-paragraph (a)(5) of this paragraph;

F_g = the flight profile alleviation factor defined in sub-paragraph (a)(6) of this paragraph.

(5) The following reference gust velocities apply:

(i) At aeroplane speeds between V_B and V_C: Positive and negative gusts with reference gust velocities of 17.07 m/s (56.0 ft/s) EAS must be considered at sea level. The reference gust velocity may be reduced linearly from 17.07 m/s (56.0 ft/s) EAS at sea level to 13.41 m/s (44.0 ft/s) EAS at 4572 m (15 000 ft). The reference gust velocity may be further reduced linearly from 13.41 m/s (44.0 ft/s) EAS at 4572 m (15 000 ft) to 6.36 m/s (20.86 ft/sec) EAS at 18288 m (60 000 ft).

(ii) At the aeroplane design speed V_D: The reference gust velocity must be 0·5 times the value obtained under CS 25.341(a)(5)(i).

(6) The flight profile alleviation factor, F_g, must be increased linearly from the sea level value to a value of 1.0 at the maximum operating altitude defined in CS 25.1527. At sea level, the flight profile alleviation factor is determined by the following equation.

$$F_g = 0 \cdot 5\,(F_{gz} + F_{gm})$$

where –

$$F_{gz} = 1 - \frac{Z_{mo}}{76200}; \quad \left(F_{gz} = 1 - \frac{Z_{mo}}{250\,000}\right);$$

$$F_{gm} = \sqrt{R_2 Tan\left(\pi R_{1/4}\right)};$$

$$R_1 = \frac{Maximum\ Landing\ Weight}{Maximum\ Take-off\ Weight};$$

$$R_2 = \frac{Maximum\ Zero\ Fuel\ Weight}{Maximum\ Take-off\ Weight};$$

Z_{mo} maximum operating altitude (metres (feet)) defined in CS 25.1527.

(7) When a stability augmentation system is included in the analysis, the effect of any significant system non-linearities should be accounted for when deriving limit loads from limit gust conditions.

(b) *Continuous Turbulence Design Criteria*. The dynamic response of the aeroplane to vertical and lateral continuous turbulence must be taken into account. The dynamic analysis must take into account unsteady aerodynamic characteristics and all significant structural degrees of freedom including rigid body motions. The limit loads must be determined for all critical altitudes,

weights, and weight distributions as specified in CS 25.321(b), and all critical speeds within the ranges indicated in subparagraph (b)(3).

(1) Except as provided in subparagraphs (b)(4) and (b)(5) of this paragraph, the following equation must be used:

$$P_L = P_{L-1g} \pm U_\sigma \bar{A}$$

Where:

P_L = limit load;

P_{L-1g} = steady 1-g load for the condition;

A = ratio of root-mean-square incremental load for the condition to root-mean-square turbulence velocity; and

U_σ = limit turbulence intensity in true airspeed, specified in subparagraph (b)(3) of this paragraph.

(2) Values of $\bar{A}$ must be determined according to the following formula:

$$\bar{A} = \sqrt{\int_0^\infty |H(\Omega)|^2 \Phi_I(\Omega) d\Omega}$$

Where:

H(Ω) = the frequency response function, determined by dynamic analysis, that relates the loads in the aircraft structure to the atmospheric turbulence; and

$\Phi_I(\Omega)$ = normalised power spectral density of atmospheric turbulence given by:

$$\Phi_I(\Omega) = \frac{L}{\pi} \frac{1 + \frac{8}{3}(1.339\Omega L)^2}{[1 + (1.339\Omega L)^2]^{11/6}}$$

Where:

Ω = reduced frequency, rad/ft; and

L = scale of turbulence = 2,500 ft.

(3) The limit turbulence intensities, U_σ, in m/s (ft/s) true airspeed required for compliance with this paragraph are:

(i) At aeroplane speeds between V_B and V_C:

$$U_\sigma = U_{\sigma ref} \, F_g$$

Where:

$U_{\sigma ref}$ is the reference turbulence intensity that varies linearly with altitude from 27.43 m/s (90 ft/s) (TAS) at sea level to 24.08 m/s (79 ft/s) (TAS) at 7315 m (24000 ft) and is then constant at 24.08 m/s (79 ft/s) (TAS) up to the altitude of 18288 m (60000 ft); and

F_g is the flight profile alleviation factor defined in subparagraph (a)(6) of this paragraph;

(ii) At speed V_D: U_σ is equal to 1/2 the values obtained under subparagraph (3)(i) of this paragraph.

(iii) At speeds between V_C and V_D: Uσ is equal to a value obtained by linear interpolation.

(iv) At all speeds both positive and negative incremental loads due to continuous turbulence must be considered.

(4) When an automatic system affecting the dynamic response of the aeroplane is included in the analysis, the effects of system non-linearities on loads at the limit load level must be taken into account in a realistic or conservative manner.

(5) If necessary for the assessment of loads on aeroplanes with significant non-linearities, it must be assumed that the turbulence field has a root-mean-square velocity equal to 40 percent of the U_σ values specified in subparagraph (3). The value of limit load is that load with the same probability of exceedance in the turbulence field as ĀUσ of the same load quantity in a linear approximated model.

(c) Supplementary gust conditions for wing mounted engines. For aeroplanes equipped with wing mounted engines, the engine mounts, pylons, and wing supporting structure must be designed for the maximum response at the nacelle centre of gravity derived from the following dynamic gust conditions applied to the aeroplane:

(1) A discrete gust determined in accordance with CS 25.341(a) at each angle normal to the flight path, and separately,

(2) A pair of discrete gusts, one vertical and one lateral. The length of each of these gusts must be independently tuned to the maximum response in accordance with CS 25.341(a). The penetration of the aeroplane in the combined gust field and the phasing of the vertical and lateral component gusts must be established to develop the maximum response to the gust pair. In the absence of a more rational analysis, the following formula must be used for each of the maximum engine loads in all six degrees of freedom:

$$P_L = P_{L-1g} \pm 0.85\sqrt{\left({L_{Vi}}^2 + {L_{Li}}^2\right)}$$

Where:

P_L = limit load;

$P_{L\text{-}1g}$ = steady 1-g load for the condition;

L_V = peak incremental response load due to a vertical gust according to CS 25.341(a); and

L_L = peak incremental response load due to a lateral gust according to CS 25.341(a).

[Amdt 25/1]

AMC 25.341 Gust and Continuous Turbulence Design Criteria (Acceptable Means of Compliance)

ED Decision 2005/006/R

1. PURPOSE. This AMC sets forth an acceptable means of compliance with the provisions of CS-25 dealing with discrete gust and continuous turbulence dynamic loads.

2. RELATED CERTIFICATION SPECIFICATIONS. The contents of this AMC are considered by the Agency in determining compliance with the discrete gust and continuous turbulence criteria defined in CS 25.341. Related paragraphs are:

CS 25.343	Design fuel and oil loads
CS 25.345	High lift devices
CS 25.349	Rolling conditions
CS 25.371	Gyroscopic loads
CS 25.373	Speed control devices
CS 25.391	Control surface loads
CS 25.427	Unsymmetrical loads
CS 25 445	Auxiliary aerodynamic surfaces
CS 25.571	Damage-tolerance and fatigue evaluation of structure

Reference should also be made to the following CS paragraphs: CS 25.301, CS 25.302, CS 25.303, CS 25.305, CS 25.321, CS 25.335, CS 25.1517.

3. OVERVIEW. This AMC addresses both discrete gust and continuous turbulence (or continuous gust) requirements of CS-25. It provides some of the acceptable methods of modelling aeroplanes, aeroplane components, and configurations, and the validation of those modelling methods for the purpose of determining the response of the aeroplane to encounters with gusts.

How the various aeroplane modelling parameters are treated in the dynamic analysis can have a large influence on design load levels. The basic elements to be modelled in the analysis are the elastic, inertial, aerodynamic and control system characteristics of the complete, coupled aeroplane (Figure 1). The degree of sophistication and detail required in the modelling depends on the complexity of the aeroplane and its systems.

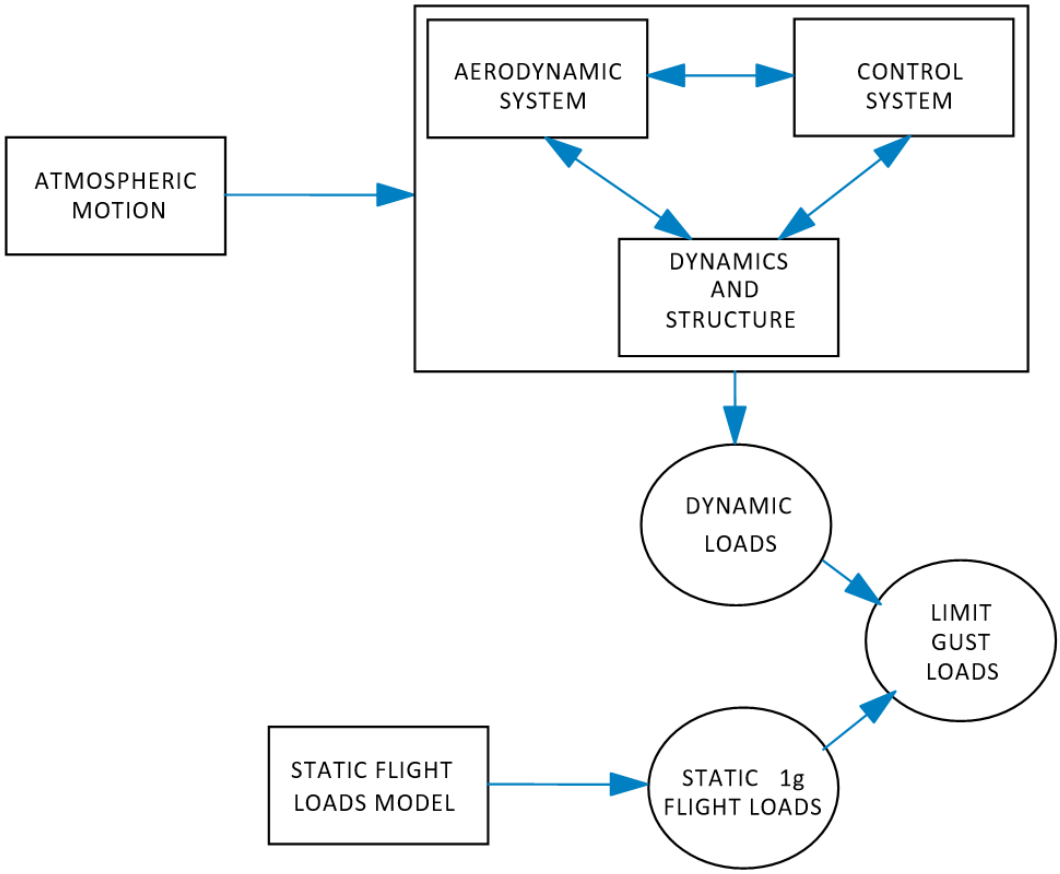

Figure 1 Basic Elements of the Gust Response Analysis

Design loads for encounters with gusts are a combination of the steady level 1-g flight loads, and the gust incremental loads including the dynamic response of the aeroplane. The steady 1-g flight loads can be realistically defined by the basic external parameters such as speed, altitude, weight and fuel load. They can be determined using static aeroelastic methods.

The gust incremental loads result from the interaction of atmospheric turbulence and aeroplane rigid body and elastic motions. They may be calculated using linear analysis methods when the aeroplane and its flight control systems are reasonably or conservatively approximated by linear analysis models.

Non-linear solution methods are necessary for aeroplane and flight control systems that are not reasonably or conservatively represented by linear analysis models. Non-linear features generally raise the level of complexity, particularly for the continuous turbulence analysis, because they often require that the solutions be carried out in the time domain.

The modelling parameters discussed in the following paragraphs include:

- Design conditions and associated steady, level 1-g flight conditions.
- The discrete and continuous gust models of atmospheric turbulence.
- Detailed representation of the aeroplane system including structural dynamics, aerodynamics, and control system modelling.
- Solution of the equations of motion and the extraction of response loads.
- Considerations for non-linear aeroplane systems.

– Analytical model validation techniques.

4. DESIGN CONDITIONS.

a. General. Analyses should be conducted to determine gust response loads for the aeroplane throughout its design envelope, where the design envelope is taken to include, for example, all appropriate combinations of aeroplane configuration, weight, centre of gravity, payload, fuel load, thrust, speed, and altitude.

b. Steady Level 1-g Flight Loads. The total design load is made up of static and dynamic load components. In calculating the static component, the aeroplane is assumed to be in trimmed steady level flight, either as the initial condition for the discrete gust evaluation or as the mean flight condition for the continuous turbulence evaluation. Static aeroelastic effects should be taken into account if significant.

To ensure that the maximum total load on each part of the aeroplane is obtained, the associated steady-state conditions should be chosen in such a way as to reasonably envelope the range of possible steady-state conditions that could be achieved in that flight condition. Typically, this would include consideration of effects such as speed brakes, power settings between zero thrust and the maximum for the flight condition, etc.

c. Dynamic Response Loads. The incremental loads from the dynamic gust solution are superimposed on the associated steady level flight 1-g loads. Load responses in both positive and negative senses should be assumed in calculating total gust response loads. Generally the effects of speed brakes, flaps, or other drag or high lift devices, while they should be included in the steady-state condition, may be neglected in the calculation of incremental loads.

d. Damage Tolerance Conditions. Limit gust loads, treated as ultimate, need to be developed for the structural failure conditions considered under CS 25.571(b). Generally, for redundant structures, significant changes in stiffness or geometry do not occur for the types of damage under consideration. As a result, the limit gust load values obtained for the undamaged aircraft may be used and applied to the failed structure. However, when structural failures of the types considered under CS 25.571(b) cause significant changes in stiffness or geometry, or both, these changes should be taken into account when calculating limit gust loads for the damaged structure.

5. GUST MODEL CONSIDERATIONS.

a. General. The gust criteria presented in CS 25.341 consist of two models of atmospheric turbulence, a discrete model and a continuous turbulence model. It is beyond the scope of this AMC to review the historical development of these models and their associated parameters. This AMC focuses on the application of those gust criteria to establish design limit loads. The discrete gust model is used to represent single discrete extreme turbulence events. The continuous turbulence model represents longer duration turbulence encounters which excite lightly damped modes. Dynamic loads for both atmospheric models must be considered in the structural design of the aeroplane.

b. Discrete Gust Model

(1) Atmosphere. The atmosphere is assumed to be one dimensional with the gust velocity acting normal (either vertically or laterally) to the direction of aeroplane travel. The one-dimensional assumption constrains the instantaneous vertical or lateral gust velocities to be the same at all points in planes normal to the direction

of aeroplane travel. Design level discrete gusts are assumed to have 1-cosine velocity profiles. The maximum velocity for a discrete gust is calculated using a reference gust velocity, U_{ref}, a flight profile alleviation factor, Fg, and an expression which modifies the maximum velocity as a function of the gust gradient distance, H. These parameters are discussed further below.

(A) Reference Gust Velocity, U_{ref} - Derived effective gust velocities representing gusts occurring once in 70,000 flight hours are the basis for design gust velocities. These reference velocities are specified as a function of altitude in CS 25.341(a)(5) and are given in terms of feet per second equivalent airspeed for a gust gradient distance, H, of 107 m (350 ft).

(B) Flight Profile Alleviation Factor, F_g - The reference gust velocity, Uref , is a measure of turbulence intensity as a function of altitude. In defining the value of Uref at each altitude, it is assumed that the aircraft is flown 100% of the time at that altitude. The factor F_g is then applied to account for the expected service experience in terms of the probability of the aeroplane flying at any given altitude within its certification altitude range. Fg is a minimum value at sea level, linearly increasing to 1.0 at the certified maximum altitude. The expression for Fg is given in CS 25.341(a)(6).

(C) Gust Gradient Distance, H - The gust gradient distance is that distance over which the gust velocity increases to a maximum value. Its value is specified as ranging from 9.1 to 107 m (30 to 350 ft). (It should be noted that if 12.5 times the mean geometric chord of the aeroplane's wing exceeds 350 ft, consideration should be given to covering increased maximum gust gradient distances.)

(D) Design Gust Velocity, U_{ds} - Maximum velocities for design gusts are proportional to the sixth root of the gust gradient distance, H. The maximum gust velocity for a given gust is then defined as:

$$U_{ds} = U_{ref}\ F_g\ (H/350)^{(1/6)}$$

The maximum design gust velocity envelope, Uds, and example design gust velocity profiles are illustrated in Figure 2.

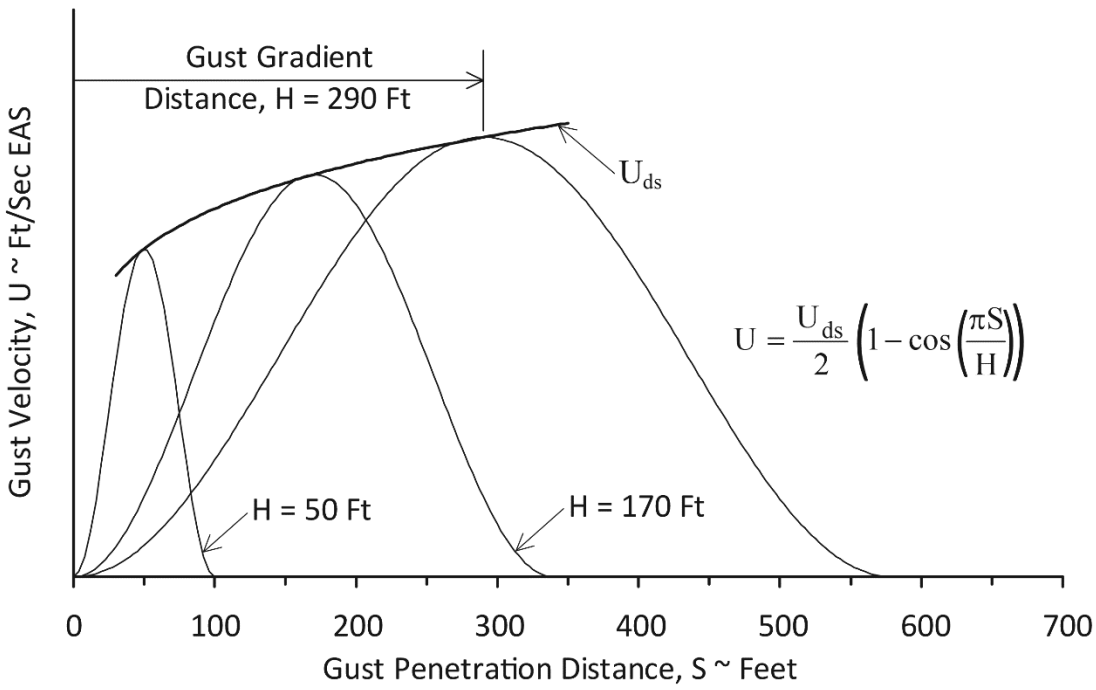

Figure-2 Typical (1-cosine) Design Gust Velocity Profiles

(2) Discrete Gust Response. The solution for discrete gust response time histories can be achieved by a number of techniques. These include the explicit integration of the aeroplane equations of motion in the time domain, and frequency domain solutions utilising Fourier transform techniques. These are discussed further in Paragraph 7.0 of this AMC.

Maximum incremental loads, P_{li}, are identified by the peak values selected from time histories arising from a series of separate, 1-cosine shaped gusts having gradient distances ranging from 9.1 to 107 m (30 to 350 ft). Input gust profiles should cover this gradient distance range in sufficiently small increments to determine peak loads and responses. Historically 10 to 20 gradient distances have been found to be acceptable. Both positive and negative gust velocities should be assumed in calculating total gust response loads. It should be noted that in some cases, the peak incremental loads can occur well after the prescribed gust velocity has returned to zero. In such cases, the gust response calculation should be run for sufficient additional time to ensure that the critical incremental loads are achieved.

The design limit load, P_{Li} , corresponding to the maximum incremental load, P_{li} for a given load quantity is then defined as:

$$P_{Li} = P_{(1-g)i} \pm P_{li}$$

Where $P_{(1-g)i}$ is the 1-g steady load for the load quantity under consideration. The set of time correlated design loads, P_{Lj} , corresponding to the peak value of the load quantity, P_{Li}, are calculated for the same instant in time using the expression:

$$P_{Lj} = P_{(1-g)j} \pm P_{lj}$$

Note that in the case of a non-linear aircraft, maximum positive incremental loads may differ from maximum negative incremental loads.

When calculating stresses which depend on a combination of external loads it may be necessary to consider time correlated load sets at time instants other than those which result in peaks for individual external load quantities.

(3) Round-The-Clock Gust. When the effect of combined vertical and lateral gusts on aeroplane components is significant, then round-the-clock analysis should be conducted on these components and supporting structures. The vertical and lateral components of the gust are assumed to have the same gust gradient distance, H and to start at the same time. Components that should be considered include horizontal tail surfaces having appreciable dihedral or anhedral (i.e., greater than 10º), or components supported by other lifting surfaces, for example T-tails, outboard fins and winglets. Whilst the round-the-clock load assessment may be limited to just the components under consideration, the loads themselves should be calculated from a whole aeroplane dynamic analysis.

The round-the-clock gust model assumes that discrete gusts may act at any angle normal to the flight path of the aeroplane. Lateral and vertical gust components are correlated since the round-the-clock gust is a single discrete event. For a linear aeroplane system, the loads due to a gust applied from a direction intermediate to the vertical and lateral directions - the round-the-clock gust loads - can be obtained using a linear combination of the load time histories induced from pure vertical and pure lateral gusts. The resultant incremental design value for a particular load of interest is obtained by determining the round-the-clock gust angle and gust length giving the largest (tuned) response value for that load. The design limit load is then obtained using the expression for P_L given above in paragraph 5(b)(2).

(4) Supplementary Gust Conditions for Wing Mounted Engines.

(A) Atmosphere - For aircraft equipped with wing mounted engines, CS 25.341(c) requires that engine mounts, pylons and wing supporting structure be designed to meet a round-the-clock discrete gust requirement and a multi-axis discrete gust requirement.

The model of the atmosphere and the method for calculating response loads for the round-the-clock gust requirement is the same as that described in Paragraph 5(b)(3) of this AMC.

For the multi-axis gust requirement, the model of the atmosphere consists of two independent discrete gust components, one vertical and one lateral, having amplitudes such that the overall probability of the combined gust pair is the same as that of a single discrete gust as defined by CS 25.341(a) as described in Paragraph 5(b)(1) of this AMC. To achieve this equal-probability condition, in addition to the reductions in gust amplitudes that would be applicable if the input were a multi-axis Gaussian process, a further factor of 0.85 is incorporated into the gust amplitudes to account for non-Gaussian properties of severe discrete gusts. This factor was derived from severe gust data obtained by a research aircraft specially instrumented to measure vertical and lateral gust components. This information is contained in Stirling Dynamics Laboratories Report No SDL –571-TR-2 dated May 1999.

(B) Multi-Axis Gust Response - For a particular aircraft flight condition, the calculation of a specific response load requires that the amplitudes, and the time phasing, of the two gust components be chosen, subject to the condition on overall probability specified in (A) above, such that the resulting combined load is maximised. For loads calculated using a linear aircraft model, the response load may be based upon the separately tuned vertical and lateral discrete gust responses for that load, each calculated as described in Paragraph 5(b)(2) of this AMC. In general, the vertical and lateral tuned gust lengths and the times to maximum response (measured from the onset of each gust) will not be the same.

Denote the independently tuned vertical and lateral incremental responses for a particular aircraft flight condition and load quantity i by L_{Vi} and L_{Li}, respectively. The associated multi-axis gust input is obtained by multiplying the amplitudes of the independently-tuned vertical and lateral discrete gusts, obtained as described in the previous paragraph, by $0.85*L_{Vi}/\sqrt{(L_{Vi}^2+L_{Li}^2)}$ and $0.85*L_{Li}/\sqrt{(L_{Vi}^2+L_{Li}^2)}$ respectively. The time-phasing of the two scaled gust components is such that their associated peak loads occur at the same instant.

The combined incremental response load is given by:

$$P_{li} = 0.85\sqrt{\left(L_{Vi}{}^2 + L_{Li}{}^2\right)}$$

and the design limit load, P_{Li}, corresponding to the maximum incremental load, P_{li}, for the given load quantity is then given by:

$$P_{Li} = P_{(1-g)i} \pm P_{li}$$

where $P_{(1-g)i}$ is the 1-g steady load for the load quantity under consideration.

The incremental, time correlated loads corresponding to the specific flight condition under consideration are obtained from the independently-tuned vertical and lateral gust inputs for load quantity i. The vertical and lateral gust amplitudes are factored by $0.85*L_{Vi}/\sqrt{(L_{Vi}^2+L_{Li}^2)}$ and $0.85*L_{Li}/\sqrt{(L_{Vi}^2+L_{Li}^2)}$ respectively. Loads L_{Vj} and L_{Lj} resulting from these reduced vertical and lateral gust inputs, at the time when the amplitude of load quantity i is at a maximum value, are added to yield the multi-axis incremental time-correlated value P_{lj} for load quantity j.

The set of time correlated design loads, P_{Lj} , corresponding to the peak value of the load quantity, P_{Li}, are obtained using the expression:

$$P_{Lj} = P_{(1-g)j} \pm P_{lj}$$

Note that with significant non-linearities, maximum positive incremental loads may differ from maximum negative incremental loads.

c. Continuous Turbulence Model.

(1) Atmosphere. The atmosphere for the determination of continuous gust responses is assumed to be one dimensional with the gust velocity acting normal (either vertically or laterally) to the direction of aeroplane travel. The one-dimensional assumption constrains the instantaneous vertical or lateral gust velocities to be the same at all points in planes normal to the direction of aeroplane travel.

The random atmosphere is assumed to have a Gaussian distribution of gust velocity intensities and a Von Kármán power spectral density with a scale of turbulence, L, equal to 2500 feet. The expression for the Von Kármán spectrum for unit, root-mean-square (RMS) gust intensity, $\Phi_l(\Omega)$, is given below. In this expression $\Omega = \omega/V$, where ω is the circular frequency in radians per second, and V is the aeroplane velocity in feet per second true airspeed.

$$\Phi(\Omega) = \frac{L}{\pi} \frac{1 + \frac{8}{3}(1.339\Omega L)^2}{[1 + (1.339\Omega L)^2]^{11/6}}$$

The Von Kármán power spectrum for unit RMS gust intensity is illustrated in Figure 3.

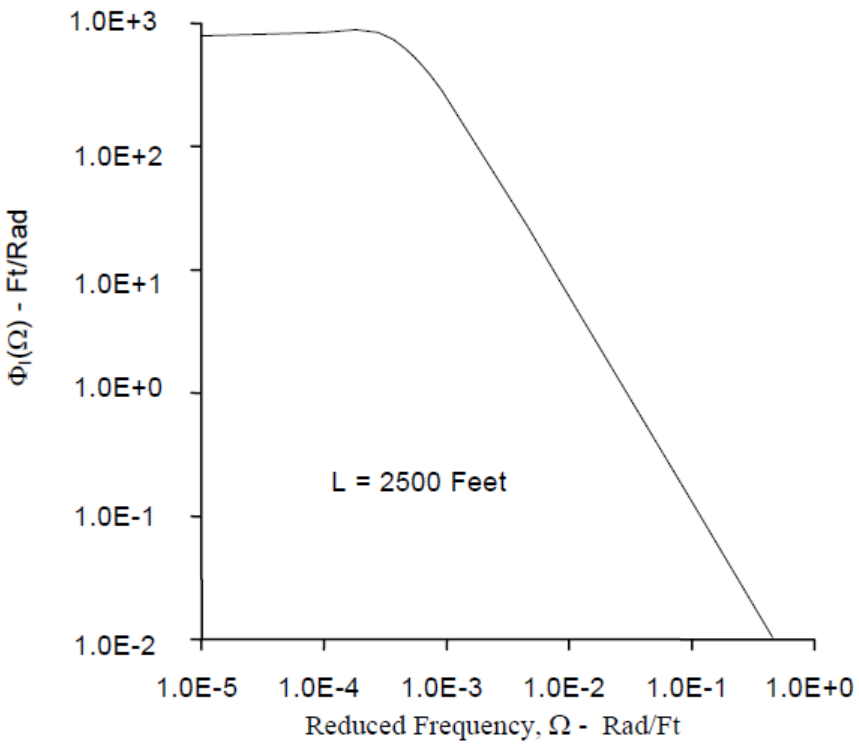

Figure-3 The Von Kármán Power Spectral Density Function, $\Phi_l(\Omega)$

The design gust velocity, Uσ, applied in the analysis is given by the product of the reference gust velocity, Uσref , and the profile alleviation factor, Fg, as follows:

$$U_\sigma = U_{ref}\, F_g$$

where values for Uσref , are specified in CS 25.341(b)(3) in meters per second (feet per second) true airspeed and Fg is defined in CS 25.341(a)(6). The value of Fg is based on aeroplane design parameters and is a minimum value at sea level, linearly increasing to 1.0 at the certified maximum design altitude. It is identical to that used in the discrete gust analysis.

As for the discrete gust analysis, the reference continuous turbulence gust intensity, Uσref, defines the design value of the associated gust field at each altitude. In defining the value of Uσref at each altitude, it is assumed that the aeroplane is flown 100% of the time at that altitude. The factor Fg is then applied

to account for the probability of the aeroplane flying at any given altitude during its service lifetime.

It should be noted that the reference gust velocity is comprised of two components, a root-mean-square (RMS) gust intensity and a peak to RMS ratio. The separation of these components is not defined and is not required for the linear aeroplane analysis. Guidance is provided in Paragraph 8.d. of this AMC for generating a RMS gust intensity for a non-linear simulation.

(2) Continuous Turbulence Response. For linear aeroplane systems, the solution for the response to continuous turbulence may be performed entirely in the frequency domain, using the RMS response. is defined in CS 25.341(b)(2) and is repeated here in modified notation for load quantity i, where:

$$\bar{A} = \left[\int_0^\infty |h_i(\Omega)|^2 \ \Phi_I(\Omega) d\Omega\right]^{1/2}$$

or

$$\bar{A} = \left[\int_0^\infty \Phi_I(\Omega)\, h_i(i\Omega) h_i^*(i\Omega) d\Omega\right]^{1/2}$$

In the above expression $\Phi_I(\Omega)$ is the input Von Kármán power spectrum of the turbulence and is defined in Paragraph 5.c.(1) of this AMC, $h_i(i\Omega)$ is the transfer function relating the output load quantity, i, to a unit, harmonically oscillating, one-dimensional gust field, and the asterisk superscript denotes the complex conjugate. When evaluating $\bar{A}_i$, the integration should be continued until a converged value is achieved since, realistically, the integration to infinity may be impractical. The design limit load, P_{Li}, is then defined as:

$$P_{Li} = P_{(1-g)i} \pm P_{li}$$
$$= P_{(1-g)i} \pm U_\sigma \ \bar{A}_i$$

where U_σ is defined in Paragraph 5.c.(1) of this AMC, and $P_{(1\text{-}g)i}$ is the 1-g steady state value for the load quantity, i, under consideration. As indicated by the formula, both positive and negative load responses should be considered when calculating limit loads.

Correlated (or equiprobable) loads can be developed using cross-correlation coefficients, ρ_{ij}, computed as follows:

$$\rho_{ij} = \frac{\int_0^\infty \Phi_I(\Omega) real\left[h_i(i\Omega) h^*{}_j(i\Omega)\right] d\Omega}{\bar{A}_i\, \bar{A}_j}$$

where, 'real[...]' denotes the real part of the complex function contained within the brackets. In this equation, the lowercase subscripts, i and j, denote the responses being correlated. A set of design loads, P_{Lj}, correlated to the design limit load P_{Li}, are then calculated as follows:

$$P_{Lj} = P_{(1-g)j} \pm U_\sigma\, \rho_{ij}\, \bar{A}_j$$

The correlated load sets calculated in the foregoing manner provide balanced load distributions corresponding to the maximum value of the response for each external load quantity, i, calculated.

When calculating stresses, the foregoing load distributions may not yield critical design values because critical stress values may depend on a combination of external loads. In these cases, a more general application of the correlation coefficient method is required. For example, when the value of stress depends on two externally applied loads, such as torsion and shear, the equiprobable relationship between the two parameters forms an ellipse as illustrated in Figure 4.

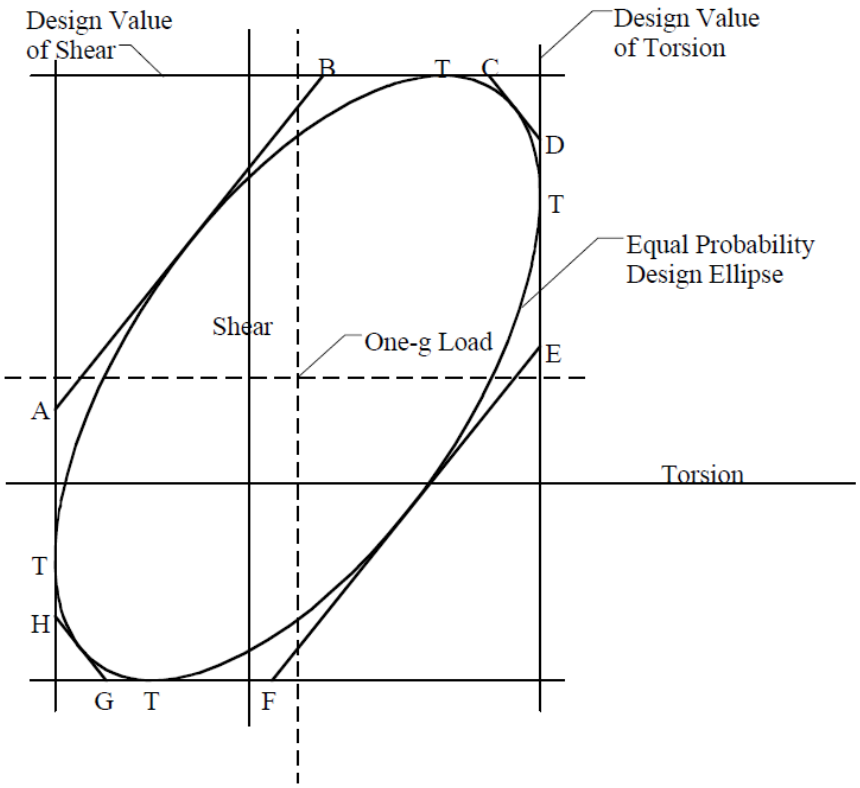

Figure-4 Equal Probability Design Ellipse

In this figure, the points of tangency, T, correspond to the expressions for correlated load pairs given by the foregoing expressions. A practical additional set of equiprobable load pairs that should be considered to establish critical design stresses are given by the points of tangency to the ellipse by lines AB, CD, EF and GH. These additional load pairs are given by the following expressions (where i = torsion and j = shear):

For tangents to lines AB and EF

$$P_{Li} = P_{(1-g)i} +/- \overline{A}_j U_\sigma \left[(1 - \rho_{ij})/2\right]^{1/2}$$

and

$$P_{Lj} = P_{(1-g)j} -/+ \overline{A}_i U_\sigma \left[(1 - \rho_{ij})/2\right]^{1/2}$$

For tangents to lines CD and GH

$$P_{Li} = P_{(1-g)i} \pm \overline{A}_j U_\sigma \left[(1 + \rho_{ij})/2\right]^{1/2}$$

and

$$P_{Lj} = P_{(1-g)j} \pm \bar{A}_i U_\sigma \left[(1 + \rho_{ij})/2\right]^{1/2}$$

All correlated or equiprobable loads developed using correlation coefficients will provide balanced load distributions.

A more comprehensive approach for calculating critical design stresses that depend on a combination of external load quantities is to evaluate directly the transfer function for the stress quantity of interest from which can be calculated the gust response function, the value for RMS response, $\bar{A}$, and the design stress values $P(1-g) \pm U_\sigma \bar{A}$.

6. AEROPLANE MODELLING CONSIDERATIONS

a. General. The procedures presented in this paragraph generally apply for aeroplanes having aerodynamic and structural properties and flight control systems that may be reasonably or conservatively approximated using linear analysis methods for calculating limit load. Additional guidance material is presented in Paragraph 8 of this AMC for aeroplanes having properties and/or systems not reasonably or conservatively approximated by linear analysis methods.

b. Structural Dynamic Model. The model should include both rigid body and flexible aeroplane degrees of freedom. If a modal approach is used, the structural dynamic model should include a sufficient number of flexible aeroplane modes to ensure both convergence of the modal superposition procedure and that responses from high frequency excitations are properly represented.

Most forms of structural modelling can be classified into two main categories: (1) the so-called “stick model” characterised by beams with lumped masses distributed along their lengths, and (2) finite element models in which all major structural components (frames, ribs, stringers, skins) are represented with mass properties defined at grid points. Regardless of the approach taken for the structural modelling, a minimum acceptable level of sophistication, consistent with configuration complexity, is necessary to represent satisfactorily the critical modes of deformation of the primary structure and control surfaces. Results from the models should be compared to test data as outlined in Paragraph 9.b. of this AMC in order to validate the accuracy of the model.

c. Structural Damping. Structural dynamic models may include damping properties in addition to representations of mass and stiffness distributions. In the absence of better information it will normally be acceptable to assume 0.03 (i.e. 1.5% equivalent critical viscous damping) for all flexible modes. Structural damping may be increased over the 0.03 value to be consistent with the high structural response levels caused by extreme gust intensity, provided justification is given.

d. Gust and Motion Response Aerodynamic Modelling. Aerodynamic forces included in the analysis are produced by both the gust velocity directly, and by the aeroplane response.

Aerodynamic modelling for dynamic gust response analyses requires the use of unsteady two-dimensional or three-dimensional panel theory methods for incompressible or compressible flow. The choice of the appropriate technique depends on the complexity of the aerodynamic configuration, the dynamic motion of the surfaces under investigation and the flight speed envelope of the aeroplane. Generally, three-dimensional panel methods achieve better modelling of the aerodynamic interference between lifting surfaces. The model should have a sufficient number of aerodynamic

degrees of freedom to properly represent the steady and unsteady aerodynamic distributions under consideration.

The build-up of unsteady aerodynamic forces should be represented. In two-dimensional unsteady analysis this may be achieved in either the frequency domain or the time domain through the application of oscillatory or indicial lift functions, respectively. Where three-dimensional panel aerodynamic theories are to be applied in the time domain (e.g. for non-linear gust solutions), an approach such as the 'rational function approximation' method may be employed to transform frequency domain aerodynamics into the time domain.

Oscillatory lift functions due to gust velocity or aeroplane response depend on the reduced frequency parameter, k. The maximum reduced frequency used in the generation of the unsteady aerodynamics should include the highest frequency of gust excitation and the highest structural frequency under consideration. Time lags representing the effect of the gradual penetration of the gust field by the aeroplane should also be accounted for in the build-up of lift due to gust velocity.

The aerodynamic modelling should be supported by tests or previous experience as indicated in Paragraph 9.d. of this AMC. Primary lifting and control surface distributed aerodynamic data are commonly adjusted by weighting factors in the dynamic gust response analyses. The weighting factors for steady flow (k = 0) may be obtained by comparing wind tunnel test results with theoretical data. The correction of the aerodynamic forces should also ensure that the rigid body motion of the aeroplane is accurately represented in order to provide satisfactory short period and Dutch roll frequencies and damping ratios. Corrections to primary surface aerodynamic loading due to control surface deflection should be considered. Special attention should also be given to control surface hinge moments and to fuselage and nacelle aerodynamics because viscous and other effects may require more extensive adjustments to the theoretical coefficients. Aerodynamic gust forces should reflect weighting factor adjustments performed on the steady or unsteady motion response aerodynamics.

e. Gyroscopic Loads. As specified in CS 25.371, the structure supporting the engines and the auxiliary power units should be designed for the gyroscopic loads induced by both discrete gusts and continuous turbulence. The gyroscopic loads for turbopropellers and turbofans may be calculated as an integral part of the solution process by including the gyroscopic terms in the equations of motion or the gyroscopic loads can be superimposed after the solution of the equations of motion. Propeller and fan gyroscopic coupling forces (due to rotational direction) between symmetric and antisymmetric modes need not be taken into account if the coupling forces are shown to be negligible.

The gyroscopic loads used in this analysis should be determined with the engine or auxiliary power units at maximum continuous rpm. The mass polar moment of inertia used in calculating gyroscopic inertia terms should include the mass polar moments of inertia of all significant rotating parts taking into account their respective rotational gearing ratios and directions of rotation.

f. Control Systems. Gust analyses of the basic configuration should include simulation of any control system for which interaction may exist with the rigid body response, structural dynamic response or external loads. If possible, these control systems should be uncoupled such that the systems which affect "symmetric flight" are included in the vertical gust analysis and those which affect "antisymmetric flight" are included in the lateral gust analysis.

The control systems considered should include all relevant modes of operation. Failure conditions should also be analysed for any control system which influences the design loads in accordance with CS 25.302 and Appendix K.

The control systems included in the gust analysis may be assumed to be linear if the impact of the non-linearity is negligible, or if it can be shown by analysis on a similar aeroplane/control system that a linear control law representation is conservative. If the control system is significantly non-linear, and a conservative linear approximation to the control system cannot be developed, then the effect of the control system on the aeroplane responses should be evaluated in accordance with Paragraph 8. of this AMC.

g. Stability. Solutions of the equations of motion for either discrete gusts or continuous turbulence require the dynamic model be stable. This applies for all modes, except possibly for very low frequency modes which do not affect load responses, such as the phugoid mode. (Note that the short period and Dutch roll modes do affect load responses). A stability check should be performed for the dynamic model using conventional stability criteria appropriate for the linear or non-linear system in question, and adjustments should be made to the dynamic model, as required, to achieve appropriate frequency and damping characteristics.

If control system models are to be included in the gust analysis it is advisable to check that the following characteristics are acceptable and are representative of the aeroplane:

– static margin of the unaugmented aeroplane

– dynamic stability of the unaugmented aeroplane

– the static aeroelastic effectiveness of all control surfaces utilised by any feed-back control system

– gain and phase margins of any feedback control system coupled with the aeroplane rigid body and flexible modes

– the aeroelastic flutter and divergence margins of the unaugmented aeroplane, and also for any feedback control system coupled with the aeroplane.

7. DYNAMIC LOADS

a. General. This paragraph describes methods for formulating and solving the aeroplane equations of motion and extracting dynamic loads from the aeroplane response. The aeroplane equations of motion are solved in either physical or modal co-ordinates and include all terms important in the loads calculation including stiffness, damping, mass, and aerodynamic forces due to both aeroplane motions and gust excitation. Generally the aircraft equations are solved in modal co-ordinates. For the purposes of describing the solution of these equations in the remainder of this AMC, modal co-ordinates will be assumed. A sufficient number of modal co-ordinates should be included to ensure that the loads extracted provide converged values.

b. Solution of the Equations of Motion. Solution of the equations of motion can be achieved through a number of techniques. For the continuous turbulence analysis, the equations of motion are generally solved in the frequency domain. Transfer functions which relate the output response quantity to an input harmonically oscillating gust field are generated and these transfer functions are used (in Paragraph 5.c. of this AMC) to generate the RMS value of the output response quantity.

There are two primary approaches used to generate the output time histories for the discrete gust analysis; (1) by explicit integration of the aeroplane equations of motion in the time domain, and (2) by frequency domain solutions which can utilise Fourier transform techniques.

c. Extraction of Loads and Responses. The output quantities that may be extracted from a gust response analysis include displacements, velocities and accelerations at structural locations; load quantities such as shears, bending moments and torques on structural components; and stresses and shear flows in structural components. The calculation of the physical responses is given by a modal superposition of the displacements, velocities and accelerations of the rigid and elastic modes of vibration of the aeroplane structure. The number of modes carried in the summation should be sufficient to ensure converged results.

A variety of methods may be used to obtain physical structural loads from a solution of the modal equations of motion governing gust response. These include the Mode Displacement method, the Mode Acceleration method, and the Force Summation method. All three methods are capable of providing a balanced set of aeroplane loads. If an infinite number of modes can be considered in the analysis, the three will lead to essentially identical results.

The Mode Displacement method is the simplest. In this method, total dynamic loads are calculated from the structural deformations produced by the gust using modal superposition. Specifically, the contribution of a given mode is equal to the product of the load associated with the normalised deformed shape of that mode and the value of the displacement response given by the associated modal co-ordinate. For converged results, the Mode Displacement method may need a significantly larger number of modal co-ordinates than the other two methods.

In the Mode Acceleration method, the dynamic load response is composed of a static part and a dynamic part. The static part is determined by conventional static analysis (including rigid body “inertia relief”), with the externally applied gust loads treated as static loads. The dynamic part is computed by the superposition of appropriate modal quantities, and is a function of the number of modes carried in the solution. The quantities to be superimposed involve both motion response forces and acceleration responses (thus giving this method its name). Since the static part is determined completely and independently of the number of normal modes carried, adequate accuracy may be achieved with fewer modes than would be needed in the Mode Displacement method.

The Force Summation method is the most laborious and the most intuitive. In this method, physical displacements, velocities and accelerations are first computed by superposition of the modal responses. These are then used to determine the physical inertia forces and other motion dependent forces. Finally, these forces are added to the externally applied forces to give the total dynamic loads acting on the structure.

If balanced aeroplane load distributions are needed from the discrete gust analysis, they may be determined using time correlated solution results. Similarly, as explained in Paragraph 5.c of this AMC, if balanced aeroplane load distributions are needed from the continuous turbulence analysis, they may be determined from equiprobable solution results obtained using cross-correlation coefficients.

8. NONLINEAR CONSIDERATIONS

a. General. Any structural, aerodynamic or automatic control system characteristic which may cause aeroplane response to discrete gusts or continuous turbulence to become non-linear with respect to intensity or shape should be represented realistically or conservatively in the calculation of loads. While many minor non-linearities are amenable to a conservative linear solution, the effect of major non-linearities cannot usually be quantified without explicit calculation.

The effect of non-linearities should be investigated above limit conditions to assure that the system presents no anomaly compared to behaviour below limit conditions, in accordance with CS K25.2(b)(2).

b. Structural and Aerodynamic Non-linearity. A linear elastic structural model, and a linear (unstalled) aerodynamic model are normally recommended as conservative and acceptable for the unaugmented aeroplane elements of a loads calculation. Aerodynamic models may be refined to take account of minor non-linear variation of aerodynamic distributions, due to local separation etc., through simple linear piecewise solution. Local or complete stall of a lifting surface would constitute a major non-linearity and should not be represented without account being taken of the influence of rate of change of incidence, i.e., the so-called 'dynamic stall' in which the range of linear incremental aerodynamics may extend significantly beyond the static stall incidence.

c. Automatic Control System Non-linearity. Automatic flight control systems, autopilots, stability control systems and load alleviation systems often constitute the primary source of non-linear response. For example,

– non-proportional feedback gains

– rate and amplitude limiters

– changes in the control laws, or control law switching

– hysteresis

– use of one-sided aerodynamic controls such as spoilers

– hinge moment performance and saturation of aerodynamic control actuators

The resulting influences on response will be aeroplane design dependent, and the manner in which they are to be considered will normally have to be assessed for each design.

Minor influences such as occasional clipping of response due to rate or amplitude limitations, where it is symmetric about the stabilised 1-g condition, can often be represented through quasi-linear modelling techniques such as describing functions or use of a linear equivalent gain.

Major, and unsymmetrical influences such as application of spoilers for load alleviation, normally require explicit simulation, and therefore adoption of an appropriate solution based in the time domain.

The influence of non-linearities on one load quantity often runs contrary to the influence on other load quantities. For example, an aileron used for load alleviation may simultaneously relieve wing bending moment whilst increasing wing torsion. Since it may not be possible to represent such features conservatively with a single aeroplane model, it may be conservatively acceptable to consider loads computed for two (possibly linear)

representations which bound the realistic condition. Another example of this approach would be separate representation of continuous turbulence response for the two control law states to cover a situation where the aeroplane may occasionally switch from one state to another.

d. Non-linear Solution Methodology. Where explicit simulation of non-linearities is required, the loads response may be calculated through time domain integration of the equations of motion.

For the tuned discrete gust conditions of CS 25.341(a), limit loads should be identified by peak values in the non-linear time domain simulation response of the aeroplane model excited by the discrete gust model described in Paragraph 5.b. of this AMC.

For time domain solution of the continuous turbulence conditions of CS 25.341(b), a variety of approaches may be taken for the specification of the turbulence input time history and the mechanism for identifying limit loads from the resulting responses.

It will normally be necessary to justify that the selected approach provides an equivalent level of safety as a conventional linear analysis and is appropriate to handle the types of non-linearity on the aircraft. This should include verification that the approach provides adequate statistical significance in the loads results.

A methodology based upon stochastic simulation has been found to be acceptable for load alleviation and flight control system non-linearities. In this simulation, the input is a long, Gaussian, pseudo-random turbulence stream conforming to a Von Kármán spectrum with a root-mean-square (RMS) amplitude of 0.4 times U_σ (defined in Paragraph 5.c (1) of this AMC). The value of limit load is that load with the same probability of exceedance as $\bar{A}\,U_\sigma$ of the same load quantity in a linear model. This is illustrated graphically in Figure 5. When using an analysis of this type, exceedance curves should be constructed using incremental load values up to, or just beyond the limit load value.

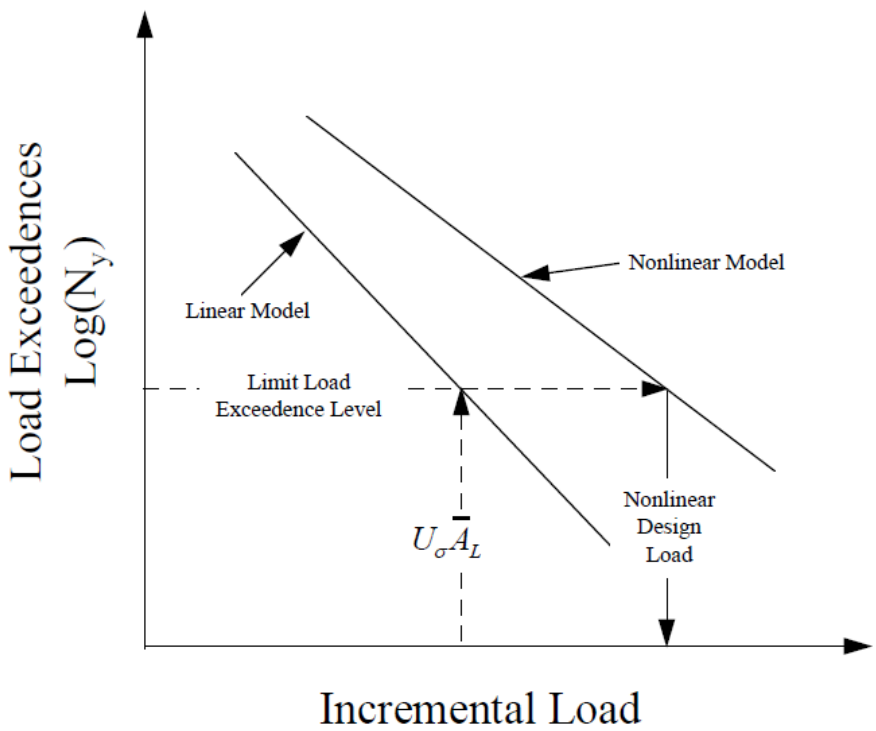

Figure-5 Establishing Limit Load for a Non-linear Aeroplane

The non-linear simulation may also be performed in the frequency domain if the frequency domain method is shown to produce conservative results. Frequency domain methods include, but are not limited to, Matched Filter Theory and Equivalent Linearisation.

9. ANALYTICAL MODEL VALIDATION

a. General. The intent of analytical model validation is to establish that the analytical model is adequate for the prediction of gust response loads. The following paragraphs discuss acceptable but not the only methods of validating the analytical model. In general, it is not intended that specific testing be required to validate the dynamic gust loads model.

b. Structural Dynamic Model Validation. The methods and test data used to validate the flutter analysis models presented in AMC 25.629 should also be applied to validate the gust analysis models. These procedures are addressed in AMC 25.629.

c. Damping Model Validation. In the absence of better information it will normally be acceptable to assume 0.03 (i.e. 1.5% equivalent critical viscous damping) for all flexible modes. Structural damping may be increased over the 0.03 value to be consistent with the high structural response levels caused by extreme gust intensity, provided justification is given.

d. Aerodynamic Model Validation. Aerodynamic modelling parameters fall into two categories:

(i) steady or quasi-steady aerodynamics governing static aeroelastic and flight dynamic airload distributions

(ii) unsteady aerodynamics which interact with the flexible modes of the aeroplane.

Flight stability aerodynamic distributions and derivatives may be validated by wind tunnel tests, detailed aerodynamic modelling methods (such as CFD) or flight test data. If detailed analysis or testing reveals that flight dynamic characteristics of the aeroplane differ significantly from those to which the gust response model have been matched, then the implications on gust loads should be investigated.

The analytical and experimental methods presented in AMC 25.629 for flutter analyses provide acceptable means for establishing reliable unsteady aerodynamic characteristics both for motion response and gust excitation aerodynamic force distributions. The aeroelastic implications on aeroplane flight dynamic stability should also be assessed.

e. Control System Validation. If the aeroplane mathematical model used for gust analysis contains a representation of any feedback control system, then this segment of the model should be validated. The level of validation that should be performed depends on the complexity of the system and the particular aeroplane response parameter being controlled. Systems which control elastic modes of the aeroplane may require more validation than those which control the aeroplane rigid body response. Validation of elements of the control system (sensors, actuators, anti-aliasing filters, control laws, etc.) which have a minimal effect on the output load and response quantities under consideration can be neglected.

It will normally be more convenient to substantiate elements of the control system independently, i.e. open loop, before undertaking the validation of the closed loop system.

(1) System Rig or Aeroplane Ground Testing. Response of the system to artificial stimuli can be measured to verify the following:

– The transfer functions of the sensors and any pre-control system anti-aliasing or other filtering.

– The sampling delays of acquiring data into the control system.

– The behaviour of the control law itself.

– Any control system output delay and filter transfer function.

– The transfer functions of the actuators, and any features of actuation system performance characteristics that may influence the actuator response to the maximum demands that might arise in turbulence; e.g. maximum rate of deployment, actuator hinge moment capability, etc.

If this testing is performed, it is recommended that following any adaptation of the model to reflect this information, the complete feedback path be validated (open loop) against measurements taken from the rig or ground tests.

(2) Flight Testing. The functionality and performance of any feedback control system can also be validated by direct comparison of the analytical model and measurement for input stimuli. If this testing is performed, input stimuli should be selected such that they exercise the features of the control system and the interaction with the aeroplane that are significant in the use of the mathematical model for gust load analysis. These might include:

– Aeroplane response to pitching and yawing manoeuvre demands.

– Control system and aeroplane response to sudden artificially introduced demands such as pulses and steps.

– Gain and phase margins determined using data acquired within the flutter test program. These gain and phase margins can be generated by passing known signals through the open loop system during flight test.

[Amdt 25/1]

CS 25.343 Design fuel and oil loads

ED Decision 2005/006/R

(a) The disposable load combinations must include each fuel and oil load in the range from zero fuel and oil to the selected maximum fuel and oil load. A structural reserve fuel condition, not exceeding 45 minutes of fuel under operating conditions in CS 25.1001(f), may be selected.

(b) If a structural reserve fuel condition is selected, it must be used as the minimum fuel weight condition for showing compliance with the flight load requirements as prescribed in this Subpart. In addition –

(1) The structure must be designed for a condition of zero fuel and oil in the wing at limit loads corresponding to –

(i) A manoeuvring load factor of +2·25; and

(ii) The gust and turbulence conditions of CS 25.341, but assuming 85% of the gust velocities prescribed in CS 25.341(a)(4) and 85% of the turbulence intensities prescribed in CS 25.341(b)(3).

(2) Fatigue evaluation of the structure must account for any increase in operating stresses resulting from the design condition of sub-paragraph (b)(1) of this paragraph; and

(3) The flutter, deformation, and vibration requirements must also be met with zero fuel.

[Amdt 25/1]

CS 25.345 High lift devices

ED Decision 2005/006/R

(a) If wing-flaps are to be used during take-off, approach, or landing, at the design flap speeds established for these stages of flight under CS 25.335(e) and with the wing-flaps in the corresponding positions, the aeroplane is assumed to be subjected to symmetrical manoeuvres and gusts. The resulting limit loads must correspond to the conditions determined as follows:

(1) Manoeuvring to a positive limit load factor of 2·0; and

(2) Positive and negative gusts of 7.62 m/sec (25 ft/sec) EAS acting normal to the flight path in level flight. Gust loads resulting on each part of the structure must be determined by rational analysis. The analysis must take into account the unsteady aerodynamic characteristics and rigid body motions of the aircraft. (See AMC 25.345(a).) The shape of the gust must be as described in CS 25.341(a)(2) except that –

U_{ds} = 7.62 m/sec (25 ft/sec) EAS;

H = 12.5 c; and

c = mean geometric chord of the wing (metres (feet)).

(b) The aeroplane must be designed for the conditions prescribed in sub-paragraph (a) of this paragraph except that the aeroplane load factor need not exceed 1·0, taking into account, as separate conditions, the effects of –

(1) Propeller slipstream corresponding to maximum continuous power at the design flap speeds V_F, and with take-off power at not less than 1·4 times the stalling speed for the particular flap position and associated maximum weight; and

(2) A head-on gust of 7.62m/sec (25 fps) velocity (EAS).

(c) If flaps or other high lift devices are to be used in en-route conditions, and with flaps in the appropriate position at speeds up to the flap design speed chosen for these conditions, the aeroplane is assumed to be subjected to symmetrical manoeuvres and gusts within the range determined by –

(1) Manoeuvring to a positive limit load factor as prescribed in CS 25.337(b) ; and

(2) The vertical gust and turbulence conditions prescribed in CS 25.341. (See AMC 25.345(c).)

(d) The aeroplane must be designed for a manoeuvring load factor of 1.5 g at the maximum take-off weight with the wing-flaps and similar high lift devices in the landing configurations.

[Amdt 25/1]

AMC 25.345(a) High lift devices (Gust conditions)

ED Decision 2003/2/RM

Compliance with CS 25.345(a) may be demonstrated by an analysis in which the solution of the vertical response equations is made by assuming the aircraft to be rigid. If desired, the analysis may take

account of the effects of structural flexibility on a quasi-flexible basis (i.e. using aerodynamic derivatives and load distributions corresponding to the distorted structure under maximum gust load).

AMC 25.345(c) High lift devices (Procedure flight condition)

ED Decision 2003/2/RM

1 En-route conditions are flight segments other than take-off, approach and landing. As applied to the use of high lift devices the following flight phases are to be included in en-route conditions:

– holding in designated areas outside the terminal area of the airport, and

– flight with flaps extended from top of descent.

– The following flight phases are not to be included in en-route conditions:

– portion of the flight corresponding to standard arrival routes preceding the interception of the final approach path, and

– holding at relatively low altitude close to the airport.

2 To apply CS 25.341(a) gust conditions to CS 25.345(c), the speeds V_{FC} and V_{FD} should be determined for the flap positions selected in en-route conditions.

These procedures should ensure proper speed margins for flap retraction in the case of severe turbulence when the aeroplane is in a low speed en-route holding configuration.

3 The manoeuvre of CS 25.345(c)(1) is to be considered as a balanced condition. (See CS 25.331(b) for definition.)

CS 25.349 Rolling conditions

ED Decision 2003/2/RM

The aeroplane must be designed for loads resulting from the rolling conditions specified in sub-paragraphs (a) and (b) of this paragraph. Unbalanced aerodynamic moments about the centre of gravity must be reacted in a rational or conservative manner, considering the principal masses furnishing the reacting inertia forces.

(a) *Manoeuvring.* The following conditions, speeds, and aileron deflections (except as the deflections may be limited by pilot effort) must be considered in combination with an aeroplane load factor of zero and of two-thirds of the positive manoeuvring factor used in design. In determining the required aileron deflections, the torsional flexibility of the wing must be considered in accordance with CS 25.301(b):

(1) Conditions corresponding to steady rolling velocities must be investigated. In addition, conditions corresponding to maximum angular acceleration must be investigated for aeroplanes with engines or other weight concentrations outboard of the fuselage. For the angular acceleration conditions, zero rolling velocity may be assumed in the absence of a rational time history investigation of the manoeuvre.

(2) At V_A, a sudden deflection of the aileron to the stop is assumed.

(3) At V_C, the aileron deflection must be that required to produce a rate of roll not less than that obtained in sub-paragraph (a)(2) of this paragraph.

(4) At V_D, the aileron deflection must be that required to produce a rate of roll not less than one-third of that in sub-paragraph (a)(2) of this paragraph.

(b) *Unsymmetrical gusts.* The aeroplane is assumed to be subjected to unsymmetrical vertical gusts in level flight. The resulting limit loads must be determined from either the wing maximum airload derived directly from CS 25.341(a), or the wing maximum airload derived indirectly from the vertical load factor calculated from CS 25.341(a). It must be assumed that 100 percent of the wing airload acts on one side of the aeroplane and 80 percent of the wing airload acts on the other side.

CS 25.351 Yaw manoeuvre conditions

ED Decision 2003/2/RM

The aeroplane must be designed for loads resulting from the yaw manoeuvre conditions specified in subparagraphs (a) through (d) of this paragraph at speeds from V_{MC} to V_D. Unbalanced aerodynamic moments about the centre of gravity must be reacted in a rational or conservative manner considering the aeroplane inertia forces. In computing the tail loads the yawing velocity may be assumed to be zero.

(a) With the aeroplane in unaccelerated flight at zero yaw, it is assumed that the cockpit rudder control is suddenly displaced to achieve the resulting rudder deflection, as limited by:

(1) the control system or control surface stops; or

(2) a limit pilot force of 1335 N (300 lbf) from V_{MC} to V_A and 890 N (200 lbf) from V_C/M_C to V_D/M_D, with a linear variation between V_A and V_C/M_C.

(b) With the cockpit rudder control deflected so as always to maintain the maximum rudder deflection available within the limitations specified in subparagraph (a) of this paragraph, it is assumed that the aeroplane yaws to the overswing sideslip angle.

(c) With the aeroplane yawed to the static equilibrium sideslip angle, it is assumed that the cockpit rudder control is held so as to achieve the maximum rudder deflection available within the limitations specified in sub-paragraph (a) of this paragraph.

(d) With the aeroplane yawed to the static equilibrium sideslip angle of sub-paragraph (c) of this paragraph, it is assumed that the cockpit rudder control is suddenly returned to neutral.

SUPPLEMENTARY CONDITIONS

CS 25.361 Engine and APU torque

ED Decision 2003/2/RM

(a) Each engine mount and its supporting structures must be designed for engine torque effects combined with –

(1) A limit engine torque corresponding to take-off power and propeller speed acting simultaneously with 75% of the limit loads from flight condition A of CS 25.333(b);

(2) A limit engine torque as specified in sub-paragraph (c) of this paragraph acting simultaneously with the limit loads from flight condition A of CS 25.333(b); and

(3) For turbo-propeller installations, in addition to the conditions specified in subparagraphs (a)(1) and (2) of this paragraph, a limit engine torque corresponding to take-off power and propeller speed, multiplied by a factor accounting for propeller control system malfunction, including quick feathering, acting simultaneously with 1 g level flight loads. In the absence of a rational analysis, a factor of 1·6 must be used.

(b) For turbine engines and auxiliary power unit installations, the limit torque load imposed by sudden stoppage due to malfunction or structural failure (such as a compressor jamming) must be considered in the design of engine and auxiliary power unit mounts and supporting structure. In the absence of better information a sudden stoppage must be assumed to occur in 3 seconds.

(c) The limit engine torque to be considered under sub-paragraph (a)(2) of this paragraph is obtained by multiplying the mean torque by a factor of 1·25 for turbo-propeller installations.

(d) When applying CS 25.361(a) to turbo-jet engines, the limit engine torque must be equal to the maximum accelerating torque for the case considered. (See AMC 25.301(b).)

CS 25.363 Side load on engine and auxiliary power unit mounts

ED Decision 2003/2/RM

(a) Each engine and auxiliary power unit mount and its supporting structure must be designed for a limit load factor in a lateral direction, for the side load on the engine and auxiliary power unit mount, at least equal to the maximum load factor obtained in the yawing conditions but not less than –

(1) 1·33; or

(2) One-third of the limit load factor for flight condition A as prescribed in CS 25.333(b).

(b) The side load prescribed in sub-paragraph (a) of this paragraph may be assumed to be independent of other flight conditions.

CS 25.365 Pressurised compartment loads

ED Decision 2003/2/RM

For aeroplanes with one or more pressurised compartments the following apply:

(a) The aeroplane structure must be strong enough to withstand the flight loads combined with pressure differential loads from zero up to the maximum relief valve setting.

(b) The external pressure distribution in flight, and stress concentrations and fatigue effects must be accounted for.

(c) If landings may be made with the compartment pressurised, landing loads must be combined with pressure differential loads from zero up to the maximum allowed during landing.

(d) The aeroplane structure must be strong enough to withstand the pressure differential loads corresponding to the maximum relief valve setting multiplied by a factor of 1·33, omitting other loads.

(e) Any structure, component or part, inside or outside a pressurised compartment, the failure of which could interfere with continued safe flight and landing, must be designed to withstand the effects of a sudden release of pressure through an opening in any compartment at any operating altitude resulting from each of the following conditions:

(1) The penetration of the compartment by a portion of an engine following an engine disintegration.

(2) Any opening in any pressurised compartment up to the size Ho in square feet; however, small compartments may be combined with an adjacent pressurised compartment and both considered as a single compartment for openings that cannot reasonably be expected to be confined to the small compartment. The size Ho must be computed by the following formula:

$$H_0 = PA_s$$

where,

H_o = maximum opening in square feet, need not exceed 20 square feet.

P = $\frac{A_s}{6240} + .024$

As = maximum cross sectional area of the pressurised shell normal to the longitudinal axis, in square feet; and

(3) The maximum opening caused by aeroplane or equipment failures not shown to be extremely improbable. (See AMC 25.365(e).)

(f) In complying with sub-paragraph (e) of this paragraph, the fail-safe features of the design may be considered in determining the probability of failure or penetration and probable size of openings, provided that possible improper operation of closure devices and inadvertent door openings are also considered. Furthermore, the resulting differential pressure loads must be combined in a rational and conservative manner with 1 g level flight loads and any loads arising from emergency depressurisation conditions. These loads may be considered as ultimate conditions; however, any deformation associated with these conditions must not interfere with continued safe flight and landing. The pressure relief provided by the intercompartment venting may also be considered.

(g) Bulkheads, floors, and partitions in pressurised compartments for occupants must be designed to withstand conditions specified in sub-paragraph (e) of this paragraph. In addition, reasonable design precautions must be taken to minimise the probability of parts becoming detached and injuring occupants while in their seats.

AMC 25.365(e) Pressurised compartment loads

ED Decision 2003/2/RM

The computed opening size from 25.365(e)(2) should be considered only as a mathematical means of developing ultimate pressure design loads to prevent secondary structural failures. No consideration need be given to the actual shape of the opening, nor to its exact location on the pressure barrier in the compartment. The damage and loss of strength at the opening location should not be considered.

A hazard assessment should determine which structures should be required to withstand the resulting differential pressure loads. The assessment of the secondary consequences of failures of these structures should address those events that have a reasonable probability of interfering with safe flight and landing, for example failures of structures supporting critical systems. For this assessment the risk of impact on the main structure from non critical structures, such as fairings, detached from the aircraft due to decompression need not be considered.

CS 25.367 Unsymmetrical loads due to engine failure

ED Decision 2003/2/RM

(a) The aeroplane must be designed for the unsymmetrical loads resulting from the failure of the critical engine. Turbo-propeller aeroplanes must be designed for the following conditions in combination with a single malfunction of the propeller drag limiting system, considering the probable pilot corrective action on the flight controls:

(1) At speeds between V_{MC} and V_D, the loads resulting from power failure because of fuel flow interruption are considered to be limit loads.

(2) At speeds between V_{MC} and V_C, the loads resulting from the disconnection of the engine compressor from the turbine or from loss of the turbine blades are considered to be ultimate loads.

(3) The time history of the thrust decay and drag build-up occurring as a result of the prescribed engine failures must be substantiated by test or other data applicable to the particular engine-propeller combination.

(4) The timing and magnitude of the probable pilot corrective action must be conservatively estimated, considering the characteristics of the particular engine-propeller-aeroplane combination.

(b) Pilot corrective action *may* be assumed to be initiated at the time maximum yawing velocity is reached, but not earlier than two seconds after the engine failure. The magnitude of the corrective action may be based on the control forces specified in CS 25.397(b) except that lower forces may be assumed where it is shown by analysis or test that these forces can control the yaw and roll resulting from the prescribed engine failure conditions.

CS 25.371 Gyroscopic loads

ED Decision 2005/006/R

The structure supporting any engine or auxiliary power unit must be designed for the loads, including gyroscopic loads, arising from the conditions specified in CS 25.331, CS 25.341, CS 25.349, CS 25.351, CS 25.473, CS 25.479, and CS 25.481, with the engine or auxiliary power unit at the maximum rpm appropriate to the condition. For the purposes of compliance with this paragraph, the pitch manoeuvre in CS 25.331(c)(1) must be carried out until the positive limit manoeuvring load factor (point A_2 in CS 25.333(b)) is reached.

[Amdt 25/1]

CS 25.373 Speed control devices

ED Decision 2005/006/R

If speed control devices (such as spoilers and drag flaps) are installed for use in en-route conditions:

(a) The aeroplane must be designed for the symmetrical manoeuvres and gusts prescribed in CS 25.333, CS 25.337, the yawing manoeuvres in CS 25.351, and the vertical and lateral gust and turbulence conditions prescribed in CS 25.341(a) and (b) at each setting and the maximum speed associated with that setting; and

(b) If the device has automatic operating or load limiting features, the aeroplane must be designed for the manoeuvre and gust conditions prescribed in sub-paragraph (a) of this paragraph, at the speeds and corresponding device positions that the mechanism allows.

[Amdt 25/1]

CONTROL SURFACE AND SYSTEM LOADS

CS 25.391 Control surface loads: general

ED Decision 2005/006/R

The control surfaces must be designed for the limit loads resulting from the flight conditions in CS 25.331, CS 25.341(a) and (b), CS 25.349 and CS 25.351, considering the requirements for:

(a) Loads parallel to hinge line, in CS 25.393;

(b) Pilot effort effects, in CS 25.397;

(c) Trim tab effects, in CS 25.407;

(d) Unsymmetrical loads, in CS 25.427; and

(e) Auxiliary aerodynamic surfaces, in CS 25.445.

[Amdt 25/1]

CS 25.393 Loads parallel to hinge line

ED Decision 2003/2/RM

(a) Control surfaces and supporting hinge brackets must be designed for inertia loads acting parallel to the hinge line. (See AMC 25.393(a).)

(b) In the absence of more rational data, the inertia loads may be assumed to be equal to KW, where –

(1) K = 24 for vertical surfaces;

(2) K = 12 for horizontal surfaces; and

(3) W = weight of the movable surfaces.

AMC 25.393(a) Loads parallel to hinge line

ED Decision 2003/2/RM

The loads parallel to the hinge line on primary control surfaces and other movable surfaces, such as tabs, spoilers, speedbrakes, flaps, slats and all-moving tailplanes, should take account of axial play between the surface and its supporting structure in complying with CS 25.393(a). For the rational analysis, the critical airframe acceleration time history in the direction of the hinge line from all flight and ground design conditions (except the emergency landing conditions of CS 25.561) should be considered. The play assumed in the control surface supporting structure, should include the maximum tolerable nominal play and the effects of wear.

CS 25.395 Control system

ED Decision 2003/2/RM

(a) Longitudinal, lateral, directional and drag control systems and their supporting structures must be designed for loads corresponding to 125% of the computed hinge moments of the movable control surface in the conditions prescribed in CS 25.391.

(b) The system limit loads of paragraph (a) need not exceed the loads that can be produced by the pilot (or pilots) and by automatic or power devices operating the controls.

(c) The loads must not be less than those resulting from application of the minimum forces prescribed in CS 25.397(c).

CS 25.397 Control system loads

ED Decision 2003/2/RM

(a) *General.* The maximum and minimum pilot forces, specified in sub-paragraph (c) of this paragraph, are assumed to act at the appropriate control grips or pads (in a manner simulating flight conditions) and to be reacted at the attachment of the control system to the control surface horn.

(b) *Pilot effort effects.* In the control surface flight loading condition, the air loads on movable surfaces and the corresponding deflections need not exceed those that would result in flight from the application of any pilot force within the ranges specified in sub-paragraph (c) of this paragraph. Two-thirds of the maximum values specified for the aileron and elevator may be used if control surface hinge moments are based on reliable data. In applying this criterion, the effects of servo mechanisms, tabs, and automatic pilot systems, must be considered.

(c) *Limit pilot forces and torques.* The limit pilot forces and torques are as follows:

Control	Maximum forces or torques	Minimum forces or torques
Aileron: Stick Wheel*	 445 N (100 lbf) 356 DNm (80 D in.lb)**	 178 N (40 lbf) 178 DNm (40 D in.lbf)
Elevator: Stick Wheel (symmetrical) Wheel (unsymmetrical)†	 1112 N (250 lbf) 1335N(300 lbf)	 445 N (100 lbf) 445 N(100 lbf) 445 N (100 lbf)
Rudder	1335 N (300 lbf)	578 N 130 lbf

*The critical parts of the aileron control system must be designed for a single tangential force with a limit value equal to 1·25 times the couple force determined from these criteria.

**D = wheel diameter in m (inches)

†The unsymmetrical forces must be applied at one of the normal handgrip points on the periphery of the control wheel.

CS 25.399 Dual control system

ED Decision 2006/005/R

(a) Each dual control system must be designed for the pilots operating in opposition, using individual pilot forces not less than –

(1) 0·75 times those obtained under CS 25.395; or

(2) The minimum forces specified in CS 25.397(c).

(b) The control system must be designed for pilot forces applied in the same direction, using individual pilot forces not less than 0·75 times those obtained under CS 25.395.

[Amdt 25/2]

CS 25.405 Secondary control system

ED Decision 2003/2/RM

Secondary controls, such as wheel brake, spoiler, and tab controls, must be designed for the maximum forces that a pilot is likely to apply to those controls. The following values may be used:

PILOT CONTROL FORCE LIMITS (SECONDARY CONTROLS).

Control	Limit pilot forces
Miscellaneous: *Crank, wheel, or lever.	$\left(\frac{1+R}{3}\right) x\ 222\ N\ (50\ lbf)$, but not less than 222 N (50 lbf) nor more than 667 N (150 lbf) (R = radius). (Applicable to any angle within 20° of plane of control).
Twist	15 Nm (133 in.lbf)
Push-pull	To be chosen by applicant.

*Limited to flap, tab, stabiliser, spoiler, and landing gear operation controls.

CS 25.407 Trim tab effects

ED Decision 2003/2/RM

The effects of trim tabs on the control surface design conditions must be accounted for only where the surface loads are limited by maximum pilot effort. In these cases, the tabs are considered to be deflected in the direction that would assist the pilot, and the deflections are –

(a) For elevator trim tabs, those required to trim the aeroplane at any point within the positive portion of the pertinent flight envelope in CS 25.333(b), except as limited by the stops; and

(b) For aileron and rudder trim tabs, those required to trim the aeroplane in the critical unsymmetrical power and loading conditions, with appropriate allowance for rigging tolerances.

CS 25.409 Tabs

ED Decision 2003/2/RM

(a) *Trim tabs.* Trim tabs must be designed to withstand loads arising from all likely combinations of tab setting, primary control position, and aeroplane speed (obtainable without exceeding the flight load conditions prescribed for the aeroplane as a whole), when the effect of the tab is opposed by pilot effort forces up to those specified in CS 25.397(b).

(b) *Balancing tabs.* Balancing tabs must be designed for deflections consistent with the primary control surface loading conditions.

(c) *Servo tabs.* Servo tabs must be designed for deflections consistent with the primary control surface loading conditions obtainable within the pilot manoeuvring effort, considering possible opposition from the trim tabs.

CS 25.415 Ground gust conditions

ED Decision 2003/2/RM

(a) The flight control systems and surfaces must be designed for the limit loads generated when the aircraft is subjected to a horizontal 33.44 m/sec (65 knots) ground gust from any direction, while taxying with the controls locked and unlocked and while parked with the controls locked.

(b) The control system and surface loads due to ground gust may be assumed to be static loads and the hinge moments H, in Newton metres (foot pounds), must be computed from the formula:

$$H = K\ 1/2\rho_o V^2 cS$$

where:

K = hinge moment factor for ground gusts derived in subparagraph (c) of this paragraph

ρ_o = density of air at sea level = 1.225 (kg/m^3) (0.0023769 (slugs/ft^3) = 0.0023769 (lb-sec^2/ ft^4))

V = 33.44 m/sec (65 knots = 109.71 fps) relative to the aircraft

S = area of the control surface aft of the hinge line (m^2) (ft^2)

c = mean aerodynamic chord of the control surface aft of the hinge line (m) (ft)

(c) The hinge moment factor K for ground gusts must be taken from the following table:

Surface	*K*	Position of controls
(a) Aileron	0.75	Control column locked or lashed in mid-position.
(b) Aileron	*±0.50	Ailerons at full throw.
(c) Elevator	*±0.75	Elevator full down.
(d) Elevator	*±0.75	Elevator full up.
(e) Rudder	0.75	Rudder in neutral.
(f) Rudder	0.75	Rudder at full throw.

* A positive value of K indicates a moment tending to depress the surface, while a negative value of K indicates a moment tending to raise the surface.

(d) The computed hinge moment of subparagraph (b) must be used to determine the limit loads due to ground gust conditions for the control surface. A 1.25 factor on the computed hinge moments must be used in calculating limit control system loads.

(e) Where control system flexibility is such that the rate of load application in the ground gust conditions might produce transient stresses appreciably higher than those corresponding to static loads, in the absence of a rational analysis an additional factor of 1.60 must be applied to the control system loads of subparagraph (d) to obtain limit loads. If a rational analysis is used, the additional factor must not be less than 1.20.

(f) For the condition of the control locks engaged, the control surfaces, the control system locks and the parts of the control systems (if any) between the surfaces and the locks must be designed to the respective resultant limit loads. Where control locks are not provided then the control surfaces, the control system stops nearest the surfaces and the parts of the control systems (if any) between the surfaces and the stops must be designed to the resultant limit loads. If the control system design is such as to allow any part of the control system to impact with the stops due to flexibility, then the resultant impact loads must be taken into account in deriving the limit loads due to ground gust.

(g) For the condition of taxying with the control locks disengaged, the following apply:

(1) The control surfaces, the control system stops nearest the surfaces and the parts of the control systems (if any) between the surfaces and the stops must be designed to the resultant limit loads.

(2) The parts of the control systems between the stops nearest the surfaces and the cockpit controls must be designed to the resultant limit loads, except that the parts of the control system where loads are eventually reacted by the pilot need not exceed:

(i) The loads corresponding to the maximum pilot loads in CS 25.397(c) for each pilot alone; or

(ii) 0.75 times these maximum loads for each pilot when the pilot forces are applied in the same direction

AMC 25.415 Ground gust conditions

ED Decision 2006/005/R

1. PURPOSE. This AMC sets forth acceptable methods of compliance with the provisions of CS-25 dealing with the certification requirements for ground gust conditions. Guidance information is provided for showing compliance with CS 25.415, relating to structural design of the control surfaces and systems while taxying with control locks engaged and disengaged and when parked with control locks engaged. Other methods of compliance with the requirements may be acceptable.

2. RELATED CERTIFICATION SPECIFICATIONS.

CS 25.415 "Ground Gust Conditions".

CS 25.519 "Jacking and Tie-down Provisions"

3. BACKGROUND.

a. The requirement to consider the effects of ground gusts has been applied to large/transport aeroplanes since 1950. The purpose of the requirement was to protect the flight control system from excessive peak ground wind loads while the aeroplane is parked or while taxying downwind. For developing the original regulation, the control surface load distribution was considered to be triangular with the peak at the trailing edge representing reversed flow over the control surface. This assumption, along with assumptions about the wind approach angle and typical control surface geometries were developed into a table of hinge moment factors and set forth in the regulation. These hinge moment factors have been carried forward to the existing table in CS 25.415. The maximum design wind speed was originally set at 96 km/h (88 feet per second (52 knots)) under the presumption that higher speeds were predictable storm conditions and the aircraft owner could take additional precautions beyond engaging the standard gust locks.

b. The conditions of CS 25.519 require consideration of the aeroplane in a moored or jacked condition in wind speeds up to 120 km/h (65 knots). In order to be consistent in the treatment of ground winds, the wind speeds prescribed by CS 25.415, concerning ground gust conditions on control surfaces, was increased to 120 km/h (65 knots) at Change 15 of JAR-25.

c. There have been several incidents and accidents caused by hidden damage that had previously occurred in ground gust conditions. Although many of these events were for aeroplanes that had used the lower wind speeds from the earlier rules, analysis indicates that the most significant contributor to the damage was the dynamic load effect. The dynamic effects were most significant for control system designs in which the gust locks were designed to engage the control system at locations far from the control surface horn. Based on these events additional factors are defined for use in those portions of the system and surface that could be affected by dynamic effects.

d. The flight control system and surface loads prescribed by CS 25.415 are limit loads based on a peak wind speed of 120 km/h (65 knots) EAS. In operation, the peak wind speed would most often be caused by an incremental fluctuation in velocity imposed on top of a less rapidly changing mean wind speed. Therefore, an appropriate peak wind speed

limitation should be reflected in the applicable documents, when there is a potential risk of structural damage.

4. COMPLIANCE.

a. The ground gust requirements take into account the conditions of the aeroplane parked with controls locked, and taxying with controls either locked or unlocked. In either of the locked conditions the control surface loads are assumed to be reacted at the control system locks. In the unlocked condition the pilot is assumed to be at the controls and the controls are assumed to be powered, if applicable. In the latter condition, the control surface loads are assumed to be reacted, if necessary, at the cockpit controls by the pilot(s) up to the limits of the maximum pilot forces and torques given in CS 25.397(c).

b. Where loads are eventually reacted at the cockpit controls, the loads in those parts of the control system between the control system stops nearest the control surfaces and the cockpit controls need not exceed those that would result from the application of the specified maximum pilot effort effects. However, higher loads can be reacted by the control system stops. Those parts of the control system from the control surfaces to the control system stops nearest the surfaces should be designed to the resultant limit loads including dynamic effects, if applicable, and regardless of pilot effort limitations. Similarly, pilot effort limitations would not apply to parts of control systems where the loads are not eventually reacted at the cockpit controls, for example an aileron control system where the right hand side aileron loads are reacted by the left hand side aileron, without participation by the pilot(s).

c. In either the taxying condition (controls locked or unlocked) or the parked condition (controls locked), if the control system flexibility is such that the rate of load application in the ground gust conditions might produce transient stresses appreciably higher than those corresponding to static loads, the effects of this rate of application are required to be considered. Manually powered control systems and control systems where the gust lock is located remotely from the control surface are examples of designs that might fall in this category. In such cases the control system loads are required by CS 25.415(e) to be increased by an additional factor over the standard factor of 1.25.

[Amdt 25/2]

CS 25.427 Unsymmetrical loads

ED Decision 2005/006/R

(a) In designing the aeroplane for lateral gust, yaw manoeuvre and roll manoeuvre conditions, account must be taken of unsymmetrical loads on the empennage arising from effects such as slipstream and aerodynamic interference with the wing, vertical fin and other aerodynamic surfaces.

(b) The horizontal tail must be assumed to be subjected to unsymmetrical loading conditions determined as follows:

(1) 100% of the maximum loading from the symmetrical manoeuvre conditions of CS 25.331 and the vertical gust conditions of CS 25.341(a) acting separately on the surface on one side of the plane of symmetry; and

(2) 80% of these loadings acting on the other side.

(c) For empennage arrangements where the horizontal tail surfaces have dihedral angles greater than plus or minus 10 degrees, or are supported by the vertical tail surfaces, the surfaces and

the supporting structure must be designed for gust velocities specified in CS 25.341(a) acting in any orientation at right angles to the flight path.

(d) Unsymmetrical loading on the empennage arising from buffet conditions of CS 25.305(e) must be taken into account.

[Amdt 25/1]

CS 25.445 Outboard fins

ED Decision 2003/2/RM

(a) When significant, the aerodynamic influence between auxiliary aerodynamic surfaces, such as outboard fins and winglets, and their supporting aerodynamic surfaces must be taken into account for all loading conditions including pitch, roll and yaw manoeuvres, and gusts as specified in CS 25.341(a) acting at any orientation at right angles to the flight path.

(b) To provide for unsymmetrical loading when outboard fins extend above and below the horizontal surface, the critical vertical surface loading (load per unit area) determined under CS 25.391 must also be applied as follows:

(1) 100% to the area of the vertical surfaces above (or below) the horizontal surface.

(2) 80% to the area below (or above) the horizontal surface.

CS 25.457 Wing-flaps

ED Decision 2003/2/RM

Wing flaps, their operating mechanisms, and their supporting structures must be designed for critical loads occurring in the conditions prescribed in CS 25.345, accounting for the loads occurring during transition from one wing-flap position and airspeed to another.

CS 25.459 Special devices

ED Decision 2003/2/RM

The loading for special devices using aero-dynamic surfaces (such as slots, slats and spoilers) must be determined from test data.

GROUND LOADS

CS 25.471 General

ED Decision 2003/2/RM

(a) *Loads and equilibrium.* For limit ground loads –

(1) Limit ground loads obtained under this Subpart are considered to be external forces applied to the aeroplane structure; and

(2) In each specified ground load condition, the external loads must be placed in equilibrium with the linear and angular inertia loads in a rational or conservative manner.

(b) *Critical centres of gravity.* The critical centres of gravity within the range for which certification is requested must be selected so that the maximum design loads are obtained in each landing gear element. Fore and aft, vertical, and lateral aeroplane centres of gravity must be considered. Lateral displacements of the centre of gravity from the aeroplane centreline which would result in main gear loads not greater than 103% of the critical design load for symmetrical loading conditions may be selected without considering the effects of these lateral centre of gravity displacements on the loading of the main gear elements, or on the aeroplane structure provided –

(1) The lateral displacement of the centre of gravity results from random passenger or cargo disposition within the fuselage or from random unsymmetrical fuel loading or fuel usage; and

(2) Appropriate loading instructions for random disposable loads are included under the provisions of CS 25.1583(c)(1) to ensure that the lateral displacement of the centre of gravity is maintained within these limits.

(c) *Landing gear dimension data.* Figure 1 of Appendix A contains the basic landing gear dimension data.

CS 25.473 Landing load conditions and assumptions

ED Decision 2003/2/RM

(a)For the landing conditions specified in CS 25.479 to 25.485, the aeroplane is assumed to contact the ground:

(1)In the attitudes defined in CS 25.479 and CS 25.481.

(2) With a limit descent velocity of 3·05 m/sec (10 fps) at the design landing weight (the maximum weight for landing conditions at maximum descent velocity); and

(3) With a limit descent velocity of 1·83 m/sec (6 fps) at the design take-off weight (the maximum weight for landing conditions at a reduced descent velocity).

(4) The prescribed descent velocities may be modified if it is shown that the aeroplane has design features that make it impossible to develop these velocities.

(b) Aeroplane lift, not exceeding aeroplane weight, may be assumed, unless the presence of systems or procedures significantly affects the lift.

(c) The method of analysis of aeroplane and landing gear loads must take into account at least the following elements:

(1) Landing gear dynamic characteristics.

(2) Spin-up and spring back.

(3) Rigid body response.

(4) Structural dynamic response of the airframe, if significant.

(d) The landing gear dynamic characteristics must be validated by tests as defined in CS 25.723(a).

(e) The coefficient of friction between the tyres and the ground may be established by considering the effects of skidding velocity and tyre pressure. However, this coefficient of friction need not be more than 0·8.

CS 25.477 Landing gear arrangement

ED Decision 2003/2/RM

CS 25.479 to 25.485 apply to aeroplanes with conventional arrangements of main and nose gears, or main and tail gears, when normal operating techniques are used.

CS 25.479 Level landing conditions

ED Decision 2003/2/RM

(a) In the level attitude, the aeroplane is assumed to contact the ground at forward velocity components, ranging from V_{L1} to 1·25 V_{L2} parallel to the ground under the conditions prescribed in CS 25.473 with:

(1) V_{L1} equal to V_{S0}(TAS) at the appropriate landing weight and in standard sea-level conditions; and

(2) V_{L2}, equal to V_{S0}(TAS) at the appropriate landing weight and altitudes in a hot day temperature of 22.8°C (41°F) above standard.

(3) The effects of increased contact speed must be investigated if approval of downwind landings exceeding 19 km/h (10 knots) is requested.

(b) For the level landing attitude for aeroplanes with tail wheels, the conditions specified in this paragraph must be investigated with the aeroplane horizontal reference line horizontal in accordance with Figure 2 of Appendix A of CS-25.

(c) For the level landing attitude for aeroplanes with nose wheels, shown in Figure 2 of Appendix A of CS-25, the conditions specified in this paragraph must be investigated assuming the following attitudes:

(1) An attitude in which the main wheels are assumed to contact the ground with the nose wheel just clear of the ground; and

(2) If reasonably attainable at the specified descent and forward velocities an attitude in which the nose and main wheels are assumed to contact the ground simultaneously.

(d) In addition to the loading conditions prescribed in sub-paragraph (a) of this paragraph, but with maximum vertical ground reactions calculated from paragraph (a), the following apply:

(1) The landing gear and directly affected structure must be designed for the maximum vertical ground reaction combined with an aft acting drag component of not less than 25% of this maximum vertical ground reaction.

(2) The most severe combination of loads that are likely to arise during a lateral drift landing must be taken into account. In absence of a more rational analysis of this condition, the following must be investigated:

(i) A vertical load equal to 75% of the maximum ground reaction of CS 25.473(a)(2) must be considered in combination with a drag and side load of 40% and 25%, respectively, of that vertical load.

(ii) The shock absorber and tyre deflections must be assumed to be 75% of the deflection corresponding to the maximum ground reaction of CS 25.473(a)(2). This load case need not be considered in combination with flat tyres.

(3) The combination of vertical and drag components is considered to be acting at the wheel axle centreline.

CS 25.481 Tail-down landing conditions

ED Decision 2003/2/RM

(a) In the tail-down attitude, the aeroplane is assumed to contact the ground at forward velocity components, ranging from V_{L1} to V_{L2}, parallel to the ground under the conditions prescribed in CS 25.473 with:

(1) V_{L1} equal to V_{S0} (TAS) at the appropriate landing weight and in standard sealevel conditions; and

(2) V_{L2} equal to V_{S0} (TAS) at the appropriate landing weight and altitudes in a hot-day temperature of 22.8°C (41°F) above standard.

The combination of vertical and drag components is considered to be acting at the main wheel axle centreline.

(b) For the tail-down landing condition for aeroplanes with tail wheels, the main and tail wheels are assumed to contact the ground simultaneously, in accordance with Figure 3 of Appendix A. Ground reaction conditions on the tail wheel are assumed to act –

(1) Vertically; and

(2) Up and aft through the axle at 45° to the ground line.

(c) For the tail-down landing condition for aeroplanes with nose wheels, the aeroplane is assumed to be at an attitude corresponding to either the stalling angle or the maximum angle allowing clearance with the ground by each part of the aeroplane other than the main wheels, in accordance with Figure 3 of Appendix A, whichever is less.

CS 25.483 One-gear landing conditions

ED Decision 2003/2/RM

For the one-gear landing conditions, the aeroplane is assumed to be in the level attitude and to contact the ground on one main landing gear, in accordance with Figure 4 of Appendix A of CS-25. In this attitude –

(a) The ground reactions must be the same as those obtained on that side under CS 25.479(d)(1), and

(b) Each unbalanced external load must be reacted by aeroplane inertia in a rational or conservative manner.

CS 25.485 Side load conditions

ED Decision 2003/2/RM

In addition to CS 25.479(d)(2) the following conditions must be considered:

(a) For the side load condition, the aeroplane is assumed to be in the level attitude with only the main wheels contacting the ground, in accordance with Figure 5 of Appendix A.

(b) Side loads of 0·8 of the vertical reaction (on one side) acting inward and 0·6 of the vertical reaction (on the other side) acting outward must be combined with one-half of the maximum vertical ground reactions obtained in the level landing conditions. These loads are assumed to be applied at the ground contact point and to be resisted by the inertia of the aeroplane. The drag loads may be assumed to be zero.

CS 25.487 Rebound landing condition

ED Decision 2003/2/RM

(a) The landing gear and its supporting structure must be investigated for the loads occurring during rebound of the aeroplane from the landing surface.

(b) With the landing gear fully extended and not in contact with the ground, a load factor of 20·0 must act on the unsprung weights of the landing gear. This load factor must act in the direction of motion of the unsprung weights as they reach their limiting positions in extending with relation to the sprung parts of the landing gear.

CS 25.489 Ground handling conditions

ED Decision 2003/2/RM

Unless otherwise prescribed, the landing gear and aeroplane structure must be investigated for the conditions in CS 25.491 to 25.509 with the aeroplane at the design ramp weight (the maximum weight for ground handling conditions). No wing lift may be considered. The shock absorbers and tyres may be assumed to be in their static position.

CS 25.491 Taxi, takeoff and landing roll

ED Decision 2003/2/RM

Within the range of appropriate ground speeds and approved weights, the aeroplane structure and landing gear are assumed to be subjected to loads not less than those obtained when the aircraft is operating over the roughest ground that may reasonably be expected in normal operation. (See AMC 25.491.)

AMC 25.491 Taxy, take-off and landing roll

ED Decision 2003/2/RM

1. PURPOSE. This AMC sets forth acceptable methods of compliance with the provisions of CS-25 dealing with the certification requirements for taxy, take-off and landing roll design loads. Guidance information is provided for showing compliance with CS 25.491, relating to structural design for aeroplane operation on paved runways and taxy-ways normally used in commercial operations. Other methods of compliance with the requirements may be acceptable.

2. RELATED CERTIFICATION SPECIFICATIONS. The contents of this AMC are considered by the Agency in determining compliance with CS 25.491. Related paragraphs are CS 25.305(c) and CS 25.235.

3. BACKGROUND.

a. All paved runways and taxy-ways have an inherent degree of surface unevenness, or roughness. This is the result of the normal tolerances of engineering standards required for construction, as well as the result of events such as uneven settlement and frost heave. In addition, repair of surfaces on an active runway or taxy-way can result in temporary ramped surfaces. Many countries have developed criteria for runway surface roughness. The Inter-national Civil Aviation Organisation (ICAO) standards are published in ICAO Annex 14.

b. In the late 1940's, as aeroplanes became larger, more flexible, and operated at higher ground speeds, consideration of dynamic loads during taxy, landing rollout, and take-off became important in aeroplane design. CS 25.235, CS 25.491 and CS 25.305(c) apply.

c. Several approaches had been taken by different manufacturers in complying with the noted regulations. If dynamic effects due to rigid body modes or airframe flexibility during taxy were not considered critical, some manufacturers used a simplified static analysis where a static inertia force was applied to the aeroplane using a load factor of 2.0 for single axle gears or 1.7 for multiple axle gears. The lower 1.7 factor was justified based on an assumption that there was a load alleviating effect resulting from rotation of the beam, on which the forward and aft axles are attached, about the central pivot point on the strut. The static load factor approach was believed to encompass any dynamic effects and it had the benefit of a relatively simple analysis.

d. As computers became more powerful and dynamic analysis methods became more sophisticated, it was found that dynamic effects sometimes resulted in loads greater than those which were predicted by the static criterion. Some manufacturers performed calculations using a series of harmonic bumps to represent a runway surface, tuning the bumps to excite various portions of the structure at a given speed. U.S. Military Standard 8862 defines amplitude and wavelengths of 1-cosine bumps intended to excite low speed plunge, pitch and wing first bending modes.

e. Some manufacturers used actual runway profile data to calculate loads. The runway profiles of the San Francisco Runway 28R or Anchorage Runway 24, which were known to cause high loads on aeroplanes and were the subject of pilot complaints until resurfaced, have been used in a series of bi-directional constant speed analytical runs to determine loads. In some cases, accelerated runs have been used, starting from several points along the runway. The profiles of those runways are described in NASA Reports CR-119 and TN D-5703. Such deterministic dynamic analyses have in general proved to be satisfactory.

f. Some manufacturers have used a statistical power spectral density (PSD) approach, especially to calculate fatigue loads. Extensive PSD runway roughness data exist for numerous world runways. The PSD approach is not considered practical for calculation of limit loads.

g. Because the various methods described above produce different results, the guidance information given in paragraphs 4, 5, and 6 of this AMC should be used when demonstrating compliance with CS 25.491.

4. RUNWAY PROFILE CONDITION.

a. Consideration of airframe flexibility and landing gear dynamic characteristics is necessary in most cases. A deterministic dynamic analysis, based on the San Francisco Runway 28R (before it was resurfaced), described in Table 1 of this AMC, is an acceptable method for

compliance. As an alternative means of compliance, the San Francisco Runway 28R (before it was resurfaced) may be used with the severe bump from 1530 to 1538 feet modified per Table 2. The modifications to the bump reflect the maximum slope change permitted in ICAO Annex 14 for temporary ramps used to transition asphalt overlays to existing pavement. The points affected by this modification are outlined in Table 1.

b. Aeroplane design loads should be developed for the most critical conditions arising from taxy, take-off, and landing run. The aeroplane analysis model should include significant aeroplane rigid body and flexible modes, and the appropriate landing gear and tyre characteristics. Unless the aeroplane has design features that would result in significant asymmetric loads, only the symmetric cases need be investigated.

c. Aeroplane steady aerodynamic effects should normally be included. However, they may be ignored if their deletion is shown to produce conservative loads. Unsteady aerodynamic effects on dynamic response may be neglected.

d. Conditions should be run at the maximum take-off weight and the maximum landing weight with critical combinations of wing fuel, payload, and extremes of centre of gravity (c.g.) range. For aeroplanes with trimable stabilisers, the stabiliser should be set at the appropriate setting for take-off cases and at the recommended final approach setting for landing cases. The elevator should be assumed faired relative to the stabiliser throughout the take-off or landing run, unless other normal procedures are specified in the flight manual.

e. A series of constant speed runs should be made in both directions from 37 km/h (20 knots) up to the maximum ground speeds expected in normal operation (V_R defined at maximum altitude and temperature for take-off conditions, 1.25 V_{L2} for landing conditions). Sufficiently small speed increments should be evaluated to assure that maximum loads are achieved. Constant speed runs should be made because using accelerated runs may not define the speed/roughness points which could produce peak dynamic loads. For maximum take-off weight cases, the analysis should account for normal take-off flap and control settings and consider both zero and maximum thrust. For maximum landing weight cases, the analysis should account for normal flap and spoiler positions following landing, and steady pitching moments equivalent to those produced by braking with a coefficient of friction of 0.3 with and without reverse thrust. The effects of automatic braking systems that reduce braking in the presence of reverse thrust may be taken into account.

5. DISCRETE LOAD CONDITION. One of the following discrete limit load conditions should be evaluated:

a. With all landing gears in contact with the ground, the condition of a vertical load equal to 1.7 times the static ground reaction should be investigated under the most adverse aeroplane loading distribution at maximum take-off weight, with and without thrust from the engines;

b. As an alternative to paragraph 5.a. above, it would be acceptable to undertake dynamic analyses under the same conditions considered in paragraph 4 of this AMC considering the aircraft response to each of the following pairs of identical and contiguous 1-cosine upwards bumps on an otherwise smooth runway:

(i) Bump wavelengths equal to the mean longitudinal distance between nose and main landing gears, or between the main and tail landing gears, as appropriate; and separately:

(ii) Bump wavelengths equal to twice this distance.

The bump height in each case should be defined as:

$$H = A + B\sqrt{L}$$

Where:

H = the bump height

L = the bump wavelength

A = 1.2, B = 0.023 if H and L are expressed in inches

A = 30.5, B = 0.116 if H and L are expressed in millimetres

6. COMBINED LOAD CONDITION. A condition of combined vertical, side and drag loads should be investigated for the main landing gear. In the absence of a more rational analysis a vertical load equal to 90% of the ground reaction from paragraph 5 above should be combined with a drag load of 20% of the vertical load and a side load of 20% of the vertical load. Side loads acting either direction should be considered.

7. TYRE CONDITIONS. The calculation of maximum gear loads in accordance with paragraphs 4, 5, and 6, may be performed using fully inflated tyres. For multiple wheel units, the maximum gear loads should be distributed between the wheels in accordance with the criteria of CS 25.511.

[Amdt 25/2]

ED Decision 2003/2/RM

TABLE 1

SAN FRANCISCO RUNWAY 28R

ONE TRACK
LENGTH: 3880 FEET
NUMBER OF POINTS: 1941
POINT SPACING: 2 FEET
ELEVATIONS: FEET
REFERENCE SOURCE: REPORT TO NASA (EFFECTS OF RUNWAY UNEVENNESS ON THE DYNAMIC RESPONSE OF SUPERSONIC TRANSPORTS), JULY 1964, U. OF CALIF. BERKELEY.

RUNWAY ELEVATION POINTS IN FEET (READ ROW WISE):

Dist.	Elev.	Dist.	Elev.	Dist.	Elev.	Dist.	Elev.	Dist.	Elev.	Dist.	Elev.	Dist.	Elev.	Dist.	Elev.
0.00	10.30	2.00	10.31	4.00	10.30	6.00	10.30	8.00	10.31	10.00	10.32	12.00	10.33	14.00	10.34
16.00	10.35	18.00	10.36	20.00	10.36	22.00	10.37	24.00	10.37	26.00	10.37	28.00	10.38	30.00	10.39
32.00	10.40	34.00	10.40	36.00	10.41	38.00	10.41	40.00	10.42	42.00	10.43	44.00	10.43	46.00	10.44
48.00	10.44	50.00	10.44	52.00	10.44	54.00	10.44	56.00	10.45	58.00	10.46	60.00	10.47	62.00	10.47
64.00	10.48	66.00	10.49	68.00	10.49	70.00	10.50	72.00	10.50	74.00	10.50	76.00	10.50	78.00	10.50
80.00	10.50	82.00	10.49	84.00	10.49	86.00	10.49	88.00	10.49	90.00	10.50	92.00	10.50	94.00	10.51
96.00	10.51	98.00	10.52	100.00	10.52	102.00	10.52	104.00	10.53	106.00	10.53	108.00	10.54	110.00	10.54
112.00	10.55	114.00	10.55	116.00	10.55	118.00	10.55	120.00	10.54	122.00	10.55	124.00	10.55	126.00	10.56
128.00	10.57	130.00	10.57	132.00	10.57	134.00	10.57	136.00	10.57	138.00	10.58	140.00	10.57	142.00	10.57
144.00	10.58	146.00	10.57	148.00	10.56	150.00	10.56	152.00	10.56	154.00	10.56	156.00	10.56	158.00	10.56
160.00	10.56	162.00	10.56	164.00	10.55	166.00	10.55	168.00	10.55	170.00	10.56	172.00	10.57	174.00	10.57
176.00	10.57	178.00	10.57	180.00	10.56	182.00	10.55	184.00	10.55	186.00	10.55	188.00	10.55	190.00	10.55
192.00	10.56	194.00	10.56	196.00	10.56	198.00	10.56	200.00	10.55	202.00	10.54	204.00	10.53	206.00	10.52
208.00	10.52	210.00	10.52	212.00	10.52	214.00	10.52	216.00	10.52	218.00	10.53	220.00	10.52	222.00	10.52
224.00	10.51	226.00	10.52	228.00	10.52	230.00	10.51	232.00	10.52	234.00	10.52	236.00	10.53	238.00	10.53
240.00	10.53	242.00	10.53	244.00	10.53	246.00	10.53	248.00	10.53	250.00	10.53	252.00	10.53	254.00	10.52
256.00	10.53	258.00	10.54	260.00	10.54	262.00	10.54	264.00	10.54	266.00	10.54	268.00	10.54	270.00	10.55
272.00	10.55	274.00	10.54	276.00	10.55	278.00	10.55	280.00	10.56	282.00	10.57	284.00	10.58	286.00	10.59

Dist.	Elev.	Dist.	Elev.	Dist.	Elev.	Dist.	Elev.	Dist.	Elev.	Dist.	Elev.	Dist.	Elev.	Dist.	Elev.
288.00	10.60	290.00	10.61	292.00	10.62	294.00	10.63	296.00	10.65	298.00	10.66	300.00	10.66	302.00	10.67
304.00	10.66	306.00	10.67	308.00	10.67	310.00	10.67	312.00	10.67	314.00	10.67	316.00	10.66	318.00	10.66
320.00	10.65	322.00	10.65	324.00	10.65	326.00	10.65	328.00	10.66	330.00	10.67	332.00	10.67	334.00	10.67
336.00	10.68	338.00	10.68	340.00	10.68	342.00	10.69	344.00	10.69	346.00	10.69	348.00	10.70	350.00	10.71
352.00	10.71	354.00	10.72	356.00	10.72	358.00	10.71	360.00	10.72	362.00	10.72	364.00	10.72	366.00	10.71
368.00	10.72	370.00	10.72	372.00	10.73	374.00	10.73	376.00	10.74	378.00	10.75	380.00	10.75	382.00	10.78
384.00	10.77	386.00	10.78	388.00	10.79	390.00	10.80	392.00	10.81	394.00	10.81	396.00	10.82	398.00	10.83
400.00	10.84	402.00	10.85	404.00	10.86	406.00	10.86	408.00	10.86	410.00	10.86	412.00	10.85	414.00	10.86
416.00	10.86	418.00	10.87	420.00	10.87	422.00	10.87	424.00	10.87	426.00	10.87	428.00	10.86	430.00	10.85
432.00	10.84	434.00	10.84	436.00	10.83	438.00	10.83	440.00	10.84	442.00	10.85	444.00	10.86	446.00	10.87
448.00	10.87	450.00	10.88	452.00	10.89	454.00	10.90	456.00	10.92	458.00	10.93	460.00	10.94	462.00	10.95
464.00	10.95	466.00	10.95	468.00	10.95	470.00	10.95	472.00	10.95	474.00	10.96	476.00	10.97	478.00	10.98
480.00	10.98	482.00	10.99	484.00	10.99	486.00	10.99	488.00	11.00	490.00	11.01	492.00	11.01	494.00	11.01
496.00	11.01	498.00	10.98	500.00	10.96	502.00	10.95	504.00	10.95	506.00	10.95	508.00	10.96	510.00	10.97
512.00	10.97	514.00	10.98	516.00	10.97	518.00	10.97	520.00	10.98	522.00	10.99	524.00	11.00	526.00	11.01
528.00	11.03	530.00	11.03	532.00	11.03	534.00	11.03	536.00	11.03	538.00	11.03	540.00	11.03	542.00	11.03
544.00	11.02	546.00	11.02	548.00	11.03	550.00	11.04	552.00	11.05	554.00	11.05	556.00	11.04	558.00	11.06
560.00	11.07	562.00	11.07	564.00	11.08	566.00	11.08	568.00	11.09	570.00	11.10	572.00	11.12	574.00	11.13
576.00	11.14	578.00	11.14	580.00	11.15	582.00	11.16	584.00	11.17	586.00	11.17	588.00	11.17	590.00	11.17
592.00	11.17	594.00	11.18	596.00	11.18	598.00	11.18	600.00	11.17	602.00	11.17	604.00	11.17	606.00	11.17
608.00	11.19	610.00	11.17	612.00	11.18	614.00	11.18	616.00	11.18	618.00	11.19	620.00	11.19	622.00	11.19
624.00	11.20	626.00	11.21	628.00	11.21	630.00	11.21	632.00	11.20	634.00	11.20	636.00	11.20	638.00	11.19
640.00	11.18	642.00	11.18	644.00	11.17	646.00	11.16	648.00	11.15	650.00	11.14	652.00	11.14	654.00	11.14
656.00	11.12	658.00	11.11	660.00	11.09	662.00	11.09	664.00	11.09	666.00	11.09	668.00	11.09	670.00	11.09
672.00	11.09	674.00	11.09	676.00	11.09	678.00	11.09	680.00	11.09	682.00	11.09	684.00	11.09	686.00	11.08
688.00	11.08	690.00	11.08	692.00	11.08	694.00	11.07	696.00	11.06	698.00	11.05	700.00	11.04	702.00	11.03
704.00	11.02	706.00	11.01	708.00	11.00	710.00	10.99	712.00	10.99	714.00	10.98	716.00	10.99	718.00	10.98
720.00	10.98	722.00	10.98	724.00	10.98	726.00	10.98	728.00	10.98	730.00	10.99	732.00	10.99	734.00	11.00

Dist.	Elev.	Dist.	Elev.	Dist.	Elev.	Dist.	Elev.	Dist.	Elev.	Dist.	Elev.	Dist.	Elev.	Dist.	Elev.
736.00	11.00	738.00	11.00	740.00	11.00	742.00	11.00	744.00	11.01	746.00	11.02	748.00	11.02	750.00	11.02
752.00	11.02	754.00	11.02	756.00	11.02	758.00	11.01	760.00	11.01	762.00	11.00	764.00	11.00	766.00	11.00
768.00	11.00	770.00	11.00	772.00	11.00	774.00	10.99	776.00	10.99	778.00	10.98	780.00	10.99	782.00	10.99
784.00	11.00	786.00	11.01	788.00	11.01	790.00	11.01	792.00	11.03	794.00	11.04	796.00	11.03	798.00	11.05
800.00	11.06	802.00	11.07	804.00	11.06	806.00	11.07	808.00	11.08	810.00	11.08	812.00	11.08	814.00	11.09
816.00	11.09	818.00	11.08	820.00	11.08	822.00	11.08	824.00	11.08	826.00	11.08	828.00	11.08	830.00	11.07
832.00	11.08	834.00	11.08	836.00	11.08	838.00	11.08	840.00	11.09	842.00	11.08	844.00	11.08	846.00	11.07
848.00	11.07	850.00	11.06	852.00	11.05	854.00	11.05	856.00	11.04	858.00	11.05	860.00	11.04	862.00	11.04
864.00	11.04	866.00	11.04	868.00	11.04	870.00	11.04	872.00	11.04	874.00	11.03	876.00	11.03	878.00	11.03
880.00	11.03	882.00	11.02	884.00	11.02	886.00	11.02	888.00	11.02	890.00	11.02	892.00	11.02	894.00	11.03
896.00	11.03	898.00	11.04	900.00	11.05	902.00	11.05	904.00	11.06	906.00	11.06	908.00	11.06	910.00	11.07
912.00	11.07	914.00	11.07	916.00	11.07	918.00	11.07	920.00	11.08	922.00	11.08	924.00	11.07	926.00	11.07
928.00	11.07	930.00	11.06	932.00	11.06	934.00	11.06	936.00	11.06	938.00	11.06	940.00	11.07	942.00	11.07
944.00	11.08	946.00	11.08	948.00	11.09	950.00	11.09	952.00	11.09	954.00	11.09	956.00	11.10	958.00	11.09
960.00	11.09	962.00	11.09	964.00	11.09	966.00	11.08	968.00	11.08	970.00	11.07	972.00	11.07	974.00	11.06
976.00	11.07	978.00	11.09	980.00	11.10	982.00	11.10	984.00	11.11	986.00	11.11	988.00	11.12	990.00	11.12
992.00	11.12	994.00	11.11	996.00	11.11	998.00	11.11	1000.00	11.11	1002.00	11.11	1004.00	11.10	1006.00	11.11
1008.00	11.11	1010.00	11.12	1012.00	11.12	1014.00	11.12	1016.00	11.11	1018.00	11.11	1020.00	11.12	1022.00	11.11
1024.00	11.11	1026.00	11.11	1028.00	11.10	1030.00	11.10	1032.00	11.12	1034.00	11.13	1036.00	11.15	1038.00	11.16
1040.00	11.17	1042.00	11.18	1044.00	11.18	1046.00	11.19	1048.00	11.19	1050.00	11.20	1052.00	11.22	1054.00	11.22
1056.00	11.23	1058.00	11.23	1060.00	11.23	1062.00	11.24	1064.00	11.25	1066.00	11.25	1068.00	11.26	1070.00	11.24
1072.00	11.27	1074.00	11.28	1076.00	11.28	1078.00	11.30	1080.00	11.31	1082.00	11.32	1084.00	11.33	1086.00	11.34
1088.00	11.34	1090.00	11.34	1092.00	11.34	1094.00	11.33	1096.00	11.32	1098.00	11.32	1100.00	11.31	1102.00	11.32
1104.00	11.32	1106.00	11.31	1108.00	11.31	1110.00	11.31	1112.00	11.32	1114.00	11.31	1116.00	11.32	1118.00	11.33
1120.00	11.34	1122.00	11.35	1124.00	11.35	1126.00	11.36	1128.00	11.36	1130.00	11.36	1132.00	11.37	1134.00	11.37
1136.00	11.37	1138.00	11.37	1140.00	11.38	1142.00	11.38	1144.00	11.38	1146.00	11.38	1148.00	11.38	1150.00	11.38
1152.00	11.38	1154.00	11.38	1156.00	11.38	1158.00	11.37	1160.00	11.37	1162.00	11.37	1164.00	11.37	1166.00	11.38
1168.00	11.38	1170.00	11.39	1172.00	11.38	1174.00	11.38	1176.00	11.39	1178.00	11.40	1180.00	11.41	1182.00	11.41

Dist.	Elev.	Dist.	Elev.	Dist.	Elev.	Dist.	Elev.	Dist.	Elev.	Dist.	Elev.	Dist.	Elev.	Dist.	Elev.
1184.00	11.42	1186.00	11.43	1188.00	11.44	1190.00	11.44	1192.00	11.45	1194.00	11.46	1196.00	11.46	1198.00	11.46
1200.00	11.46	1202.00	11.47	1204.00	11.48	1206.00	11.48	1208.00	11.48	1210.00	11.49	1212.00	11.50	1214.00	11.50
1216.00	11.50	1218.00	11.50	1220.00	11.50	1222.00	11.50	1224.00	11.49	1226.00	11.49	1228.00	11.49	1230.00	11.48
1232.00	11.47	1234.00	11.46	1236.00	11.46	1238.00	11.48	1240.00	11.46	1242.00	11.47	1244.00	11.47	1246.00	11.47
1248.00	11.47	1250.00	11.46	1252.00	11.45	1254.00	11.45	1256.00	11.45	1258.00	11.46	1260.00	11.46	1262.00	11.46
1264.00	11.45	1266.00	11.45	1268.00	11.45	1270.00	11.45	1272.00	11.45	1274.00	11.46	1276.00	11.46	1278.00	11.46
1280.00	11.48	1282.00	11.47	1284.00	11.47	1286.00	11.48	1288.00	11.48	1290.00	11.48	1292.00	11.48	1294.00	11.49
1296.00	11.49	1298.00	11.50	1300.00	11.51	1302.00	11.52	1304.00	11.52	1306.00	11.52	1308.00	11.52	1310.00	11.52
1312.00	11.52	1314.00	11.52	1316.00	11.53	1318.00	11.52	1320.00	11.52	1322.00	11.52	1324.00	11.53	1326.00	11.53
1328.00	11.53	1330.00	11.53	1332.00	11.53	1334.00	11.53	1336.00	11.54	1338.00	11.53	1340.00	11.52	1342.00	11.52
1344.00	11.51	1346.00	11.53	1348.00	11.52	1350.00	11.54	1352.00	11.53	1354.00	11.54	1356.00	11.53	1358.00	11.54
1360.00	11.53	1362.00	11.54	1364.00	11.55	1366.00	11.54	1368.00	11.54	1370.00	11.54	1372.00	11.54	1374.00	11.53
1376.00	11.52	1378.00	11.51	1380.00	11.50	1382.00	11.49	1384.00	11.49	1386.00	11.49	1388.00	11.49	1390.00	11.49
1392.00	11.48	1394.00	11.47	1396.00	11.47	1398.00	11.47	1400.00	11.46	1402.00	11.47	1404.00	11.47	1406.00	11.48
1408.00	11.47	1410.00	11.46	1412.00	11.46	1414.00	11.46	1416.00	11.46	1418.00	11.46	1420.00	11.47	1422.00	11.47
1424.00	11.47	1426.00	11.46	1428.00	11.46	1430.00	11.44	1432.00	11.43	1434.00	11.41	1436.00	11.40	1438.00	11.39
1440.00	11.38	1442.00	11.37	1444.00	11.36	1446.00	11.36	1448.00	11.35	1450.00	11.35	1452.00	11.35	1454.00	11.35
1456.00	11.35	1458.00	11.34	1460.00	11.34	1462.00	11.33	1464.00	11.32	1466.00	11.32	1468.00	11.32	1470.00	11.31
1472.00	11.31	1474.00	11.30	1476.00	11.29	1478.00	11.29	1480.00	11.28	1482.00	11.28	1484.00	11.28	1486.00	11.28
1488.00	11.28	1490.00	11.27	1492.00	11.27	1494.00	11.27	1496.00	11.26	1498.00	11.26	1500.00	11.25	1502.00	11.25
1504.00	11.24	1506.00	11.23	1508.00	11.22	1510.00	11.21	1512.00	11.19	1514.00	11.18	1516.00	11.17	1518.00	11.17
1520.00	11.15	1522.00	11.13	1524.00	11.12	1526.00	11.10	1528.00	11.10	1530.00	11.18	1532.00	11.17	1534.00	11.14
1536.00	11.14	1538.00	11.12	1540.00	11.00	1542.00	10.97	1544.00	10.95	1546.00	10.94	1548.00	10.92	1550.00	10.91
1552.00	10.92	1554.00	10.92	1556.00	10.91	1558.00	10.93	1560.00	10.93	1562.00	10.93	1564.00	10.93	1566.00	10.93
1568.00	10.93	1570.00	10.93	1572.00	10.93	1574.00	10.93	1576.00	10.93	1578.00	10.93	1580.00	10.94	1582.00	10.94
1584.00	10.94	1586.00	10.94	1588.00	10.95	1590.00	10.94	1592.00	10.93	1594.00	10.94	1596.00	10.94	1598.00	10.93
1600.00	10.92	1602.00	10.92	1604.00	10.92	1606.00	10.91	1608.00	10.91	1610.00	10.91	1612.00	10.91	1614.00	10.90
1616.00	10.89	1618.00	10.88	1620.00	10.87*	1622.00	10.89	1624.00	10.88	1626.00	10.88	1628.00	10.88	1630.00	10.87

Dist.	Elev.	Dist.	Elev.	Dist.	Elev.	Dist.	Elev.	Dist.	Elev.	Dist.	Elev.	Dist.	Elev.	Dist.	Elev.
1632.00	10.86	1634.00	10.85	1636.00	10.86	1638.00	10.86	1640.00	10.85	1642.00	10.85	1644.00	10.85	1646.00	10.84
1648.00	10.84	1650.00	10.84	1652.00	10.83	1654.00	10.83	1656.00	10.82	1658.00	10.82	1660.00	10.81	1662.00	10.81
1664.00	10.80	1666.00	10.79	1668.00	10.79	1670.00	10.79	1672.00	10.79	1674.00	10.79	1676.00	10.79	1678.00	10.80
1680.00	10.80	1682.00	10.81	1684.00	10.82	1686.00	10.82	1688.00	10.83	1690.00	10.84	1692.00	10.85	1694.00	10.85
1696.00	10.85	1698.00	10.87	1700.00	10.87	1702.00	10.88	1704.00	10.87	1706.00	10.88	1708.00	10.87	1710.00	10.87
1712.00	10.87	1714.00	10.87	1716.00	10.86	1718.00	10.85	1720.00	10.84	1722.00	10.84	1724.00	10.84	1726.00	10.84
1728.00	10.84	1730.00	10.83	1732.00	10.82	1734.00	10.82	1736.00	10.82	1738.00	10.82	1740.00	10.82	1742.00	10.82
1744.00	10.83	1746.00	10.82	1748.00	10.83	1750.00	10.82	1752.00	10.82	1754.00	10.82	1756.00	10.82	1758.00	10.81
1760.00	10.81	1762.00	10.81	1764.00	10.81	1766.00	10.82	1768.00	10.82	1770.00	10.82	1772.00	10.83	1774.00	10.83
1776.00	10.83	1778.00	10.84	1780.00	10.84	1782.00	10.85	1784.00	10.86	1786.00	10.86	1788.00	10.86	1790.00	10.88
1792.00	10.87	1794.00	10.86	1796.00	10.86	1798.00	10.86	1800.00	10.87	1802.00	10.87	1804.00	10.86	1806.00	10.85
1808.00	10.85	1810.00	10.89	1812.00	10.91	1814.00	10.91	1816.00	10.92	1818.00	10.92	1820.00	10.93	1822.00	10.93
1824.00	10.93	1826.00	10.94	1828.00	10.94	1830.00	10.95	1832.00	10.94	1834.00	10.93	1836.00	10.93	1838.00	10.92
1840.00	10.93	1842.00	10.91	1844.00	10.91	1846.00	10.90	1848.00	10.90	1850.00	10.90	1852.00	10.91	1854.00	10.91
1856.00	10.89	1858.00	10.90	1860.00	10.91	1862.00	10.91	1864.00	10.91	1866.00	10.92	1868.00	10.93	1870.00	10.94
1872.00	10.94	1874.00	10.94	1876.00	10.94	1878.00	10.94	1880.00	10.95	1882.00	10.93	1884.00	10.93	1886.00	10.93
1888.00	10.93	1890.00	10.92	1892.00	10.93	1894.00	10.93	1896.00	10.93	1898.00	10.93	1900.00	10.91	1902.00	10.90
1904.00	10.91	1906.00	10.91	1908.00	10.91	1910.00	10.91	1912.00	10.91	1914.00	10.91	1916.00	10.91	1918.00	10.90
1920.00	10.90	1922.00	10.89	1924.00	10.90	1926.00	10.90	1928.00	10.90	1930.00	10.91	1932.00	10.90	1934.00	10.91
1936.00	10.89	1938.00	10.89	1940.00	10.89	1942.00	10.89	1944.00	10.89	1946.00	10.88	1948.00	10.88	1950.00	10.87
1952.00	10.87	1954.00	10.87	1956.00	10.86	1958.00	10.88	1960.00	10.87	1962.00	10.86	1964.00	10.87	1966.00	10.87
1968.00	10.86	1970.00	10.85	1972.00	10.85	1974.00	10.85	1976.00	10.86	1978.00	10.85	1980.00	10.86	1982.00	10.86
1984.00	10.86	1986.00	10.87	1988.00	10.87	1990.00	10.87	1992.00	10.87	1994.00	10.87	1996.00	10.88	1998.00	10.87
2000.00	10.88	2002.00	10.87	2004.00	10.88	2006.00	10.88	2008.00	10.88	2010.00	10.88	2012.00	10.88	2014.00	10.89
2016.00	10.90	2018.00	10.89	2020.00	10.89	2022.00	10.89	2024.00	10.89	2026.00	10.90	2028.00	10.89	2030.00	10.89
2032.00	10.88	2034.00	10.87	2036.00	10.88	2038.00	10.87	2040.00	10.87	2042.00	10.87	2044.00	10.87	2046.00	10.88
2048.00	10.88	2050.00	10.88	2052.00	10.88	2054.00	10.88	2056.00	10.88	2058.00	10.89	2060.00	10.89	2062.00	10.89
2064.00	10.89	2066.00	10.89	2068.00	10.89	2070.00	10.89	2072.00	10.88	2074.00	10.88	2076.00	10.89	2078.00	10.88

Dist.	Elev.	Dist.	Elev.	Dist.	Elev.	Dist.	Elev.	Dist.	Elev.	Dist.	Elev.	Dist.	Elev.	Dist.	Elev.
2080.00	10.89	2082.00	10.88	2084.00	10.88	2086.00	10.88	2088.00	10.88	2090.00	10.88	2092.00	10.87	2094.00	10.87
2096.00	10.87	2098.00	10.87	2100.00	10.87	2102.00	10.88	2104.00	10.88	2106.00	10.88	2108.00	10.89	2110.00	10.89
2112.00	10.90	2114.00	10.91	2116.00	10.92	2118.00	10.92	2120.00	10.93	2122.00	10.92	2124.00	10.92	2126.00	10.92
2128.00	10.92	2130.00	10.92	2132.00	10.92	2134.00	10.92	2136.00	10.93	2138.00	10.93	2140.00	10.93	2142.00	10.93
2144.00	10.93	2146.00	10.94	2148.00	10.93	2150.00	10.93	2152.00	10.93	2154.00	10.93	2156.00	10.93	2158.00	10.92
2160.00	10.92	2162.00	10.91	2164.00	10.90	2166.00	10.92	2168.00	10.91	2170.00	10.91	2172.00	10.90	2174.00	10.90
2176.00	10.90	2178.00	10.88	2180.00	10.88	2182.00	10.86	2184.00	10.85	2186.00	10.85	2188.00	10.84	2190.00	10.84
2192.00	10.84	2194.00	10.84	2196.00	10.85	2198.00	10.85	2200.00	10.85	2202.00	10.85	2204.00	10.85	2206.00	10.85
2208.00	10.86	2210.00	10.86	2212.00	10.86	2214.00	10.87	2216.00	10.88	2218.00	10.88	2220.00	10.89	2222.00	10.90
2224.00	10.91	2226.00	10.91	2228.00	10.92	2230.00	10.92	2232.00	10.93	2234.00	10.94	2236.00	10.94	2238.00	10.95
2240.00	10.96	2242.00	10.96	2244.00	10.97	2246.00	10.99	2248.00	10.99	2250.00	10.99	2252.00	10.99	2254.00	11.00
2256.00	11.00	2258.00	11.00	2260.00	11.01	2262.00	11.01	2264.00	11.02	2266.00	11.02	2268.00	11.02	2270.00	11.04
2272.00	11.05	2274.00	11.05	2276.00	11.06	2278.00	11.06	2280.00	11.05	2282.00	11.04	2284.00	11.03	2286.00	11.03
2288.00	11.02	2290.00	11.03	2292.00	11.03	2294.00	11.04	2296.00	11.05	2298.00	11.06	2300.00	11.07	2302.00	11.09
2304.00	11.10	2306.00	11.10	2308.00	11.11	2310.00	11.12	2312.00	11.14	2314.00	11.14	2316.00	11.15	2318.00	11.16
2320.00	11.16	2322.00	11.16	2324.00	11.15	2326.00	11.15	2328.00	11.16	2330.00	11.15	2332.00	11.14	2334.00	11.14
2336.00	11.14	2338.00	11.14	2340.00	11.14	2342.00	11.14	2344.00	11.15	2346.00	11.15	2348.00	11.15	2350.00	11.15
2352.00	11.15	2354.00	11.15	2356.00	11.16	2358.00	11.16	2360.00	11.15	2362.00	11.15	2364.00	11.16	2366.00	11.16
2368.00	11.16	2370.00	11.16	2372.00	11.16	2374.00	11.16	2376.00	11.16	2378.00	11.16	2380.00	11.17	2382.00	11.17
2384.00	11.17	2386.00	11.17	2388.00	11.17	2390.00	11.17	2392.00	11.17	2394.00	11.16	2396.00	11.15	2398.00	11.15
2400.00	11.14	2402.00	11.14	2404.00	11.14	2406.00	11.13	2408.00	11.12	2410.00	11.12	2412.00	11.12	2414.00	11.12
2416.00	11.12	2418.00	11.12	2420.00	11.13	2422.00	11.13	2424.00	11.14	2426.00	11.15	2428.00	11.16	2430.00	11.17
2432.00	11.18	2434.00	11.19	2436.00	11.20	2438.00	11.20	2440.00	11.22	2442.00	11.23	2444.00	11.24	2446.00	11.24
2448.00	11.25	2450.00	11.26	2452.00	11.27	2454.00	11.28	2456.00	11.28	2458.00	11.29	2460.00	11.30	2462.00	11.30
2464.00	11.30	2466.00	11.31	2468.00	11.30	2470.00	11.31	2472.00	11.31	2474.00	11.31	2476.00	11.31	2478.00	11.30
2480.00	11.30	2482.00	11.30	2484.00	11.29	2486.00	11.29	2488.00	11.29	2490.00	11.29	2492.00	11.29	2494.00	11.29
2496.00	11.29	2498.00	11.29	2500.00	11.29	2502.00	11.30	2504.00	11.30	2506.00	11.31	2508.00	11.31	2510.00	11.32
2512.00	11.32	2514.00	11.33	2516.00	11.33	2518.00	11.34	2520.00	11.35	2522.00	11.35	2524.00	11.35	2526.00	11.35

Dist.	Elev.	Dist.	Elev.	Dist.	Elev.	Dist.	Elev.	Dist.	Elev.	Dist.	Elev.	Dist.	Elev.	Dist.	Elev.
2528.00	11.35	2530.00	11.35	2532.00	11.36	2534.00	11.36	2536.00	11.35	2538.00	11.35	2540.00	11.35	2542.00	11.35
2544.00	11.35	2546.00	11.35	2548.00	11.34	2550.00	11.34	2552.00	11.34	2554.00	11.34	2556.00	11.35	2558.00	11.35
2560.00	11.35	2562.00	11.34	2564.00	11.33	2566.00	11.33	2568.00	11.33	2570.00	11.33	2572.00	11.33	2574.00	11.33
2576.00	11.33	2578.00	11.32	2580.00	11.33	2582.00	11.33	2584.00	11.33	2586.00	11.33	2588.00	11.33	2590.00	11.34
2592.00	11.34	2594.00	11.34	2596.00	11.35	2598.00	11.35	2600.00	11.35	2602.00	11.35	2604.00	11.35	2606.00	11.35
2608.00	11.35	2610.00	11.35	2612.00	11.36	2614.00	11.36	2616.00	11.36	2618.00	11.35	2620.00	11.35	2622.00	11.35
2624.00	11.35	2626.00	11.35	2628.00	11.35	2630.00	11.36	2632.00	11.36	2634.00	11.36	2636.00	11.36	2638.00	11.36
2640.00	11.37	2642.00	11.38	2644.00	11.38	2646.00	11.39	2648.00	11.39	2650.00	11.40	2652.00	11.41	2654.00	11.42
2656.00	11.42	2658.00	11.43	2660.00	11.43	2662.00	11.42	2664.00	11.42	2666.00	11.43	2668.00	11.43	2670.00	11.43
2672.00	11.43	2674.00	11.43	2676.00	11.43	2678.00	11.44	2680.00	11.44	2682.00	11.45	2684.00	11.46	2686.00	11.46
2688.00	11.47	2690.00	11.48	2692.00	11.48	2694.00	11.49	2696.00	11.49	2698.00	11.50	2700.00	11.50	2702.00	11.51
2704.00	11.52	2706.00	11.52	2708.00	11.52	2710.00	11.52	2712.00	11.52	2714.00	11.52	2716.00	11.52	2718.00	11.52
2720.00	11.52	2722.00	11.52	2724.00	11.51	2726.00	11.51	2728.00	11.51	2730.00	11.50	2732.00	11.50	2734.00	11.50
2736.00	11.50	2738.00	11.51	2740.00	11.51	2742.00	11.51	2744.00	11.52	2746.00	11.52	2748.00	11.52	2750.00	11.52
2752.00	11.53	2754.00	11.53	2756.00	11.53	2758.00	11.52	2760.00	11.52	2762.00	11.52	2764.00	11.52	2766.00	11.52
2768.00	11.52	2770.00	11.53	2772.00	11.53	2774.00	11.53	2776.00	11.54	2778.00	11.53	2780.00	11.53	2782.00	11.54
2784.00	11.54	2786.00	11.54	2788.00	11.54	2790.00	11.53	2792.00	11.53	2794.00	11.53	2796.00	11.53	2798.00	11.54
2800.00	11.54	2802.00	11.54	2804.00	11.55	2806.00	11.55	2808.00	11.55	2810.00	11.56	2812.00	11.55	2814.00	11.55
2816.00	11.55	2818.00	11.55	2820.00	11.54	2822.00	11.53	2824.00	11.53	2826.00	11.53	2828.00	11.51	2830.00	11.52
2832.00	11.52	2834.00	11.53	2836.00	11.53	2838.00	11.54	2840.00	11.55	2842.00	11.56	2844.00	11.56	2846.00	11.57
2848.00	11.57	2850.00	11.57	2852.00	11.58	2854.00	11.58	2856.00	11.58	2858.00	11.58	2860.00	11.58	2862.00	11.58
2864.00	11.59	2866.00	11.59	2868.00	11.59	2870.00	11.59	2872.00	11.58	2874.00	11.57	2876.00	11.57	2878.00	11.58
2880.00	11.57	2882.00	11.57	2884.00	11.57	2886.00	11.58	2888.00	11.58	2890.00	11.59	2892.00	11.60	2894.00	11.62
2896.00	11.61	2898.00	11.61	2900.00	11.61	2902.00	11.61	2904.00	11.61	2906.00	11.62	2908.00	11.63	2910.00	11.64
2912.00	11.65	2914.00	11.66	2916.00	11.67	2918.00	11.67	2920.00	11.67	2922.00	11.68	2924.00	11.70	2926.00	11.72
2928.00	11.73	2930.00	11.74	2932.00	11.76	2934.00	11.77	2936.00	11.78	2938.00	11.80	2940.00	11.82	2942.00	11.82
2944.00	11.82	2946.00	11.83	2948.00	11.82	2950.00	11.82	2952.00	11.83	2954.00	11.84	2956.00	11.83	2958.00	11.83
2960.00	11.83	2962.00	11.83	2964.00	11.83	2966.00	11.83	2968.00	11.84	2970.00	11.85	2972.00	11.86	2974.00	11.87

Dist.	Elev.	Dist.	Elev.	Dist.	Elev.	Dist.	Elev.	Dist.	Elev.	Dist.	Elev.	Dist.	Elev.	Dist.	Elev.
2976.00	11.88	2978.00	11.88	2980.00	11.89	2982.00	11.90	2984.00	11.90	2986.00	11.90	2988.00	11.90	2990.00	11.90
2992.00	11.90	2994.00	11.91	2996.00	11.91	2998.00	11.90	3000.00	11.91	3002.00	11.91	3004.00	11.91	3006.00	11.91
3008.00	11.90	3010.00	11.91	3012.00	11.91	3014.00	11.92	3016.00	11.92	3018.00	11.92	3020.00	11.92	3022.00	11.92
3024.00	11.92	3026.00	11.92	3028.00	11.91	3030.00	11.91	3032.00	11.92	3034.00	11.91	3036.00	11.91	3038.00	11.91
3040.00	11.91	3042.00	11.90	3044.00	11.90	3046.00	11.90	3048.00	11.90	3050.00	11.90	3052.00	11.90	3054.00	11.90
3056.00	11.90	3058.00	11.90	3060.00	11.90	3062.00	11.91	3064.00	11.92	3066.00	11.92	3068.00	11.92	3070.00	11.93
3072.00	11.93	3074.00	11.93	3076.00	11.93	3078.00	11.94	3080.00	11.94	3082.00	11.95	3084.00	11.95	3086.00	11.95
3088.00	11.96	3090.00	11.96	3092.00	11.96	3094.00	11.96	3096.00	11.96	3098.00	11.96	3100.00	11.95	3102.00	11.94
3104.00	11.93	3106.00	11.92	3108.00	11.92	3110.00	11.92	3112.00	11.92	3114.00	11.92	3116.00	11.92	3118.00	11.92
3120.00	11.92	3122.00	11.92	3124.00	11.92	3126.00	11.92	3128.00	11.91	3130.00	11.90	3132.00	11.90	3134.00	11.90
3136.00	11.90	3138.00	11.90	3140.00	11.90	3142.00	11.90	3144.00	11.90	3146.00	11.90	3148.00	11.90	3150.00	11.90
3152.00	11.90	3154.00	11.90	3156.00	11.90	3158.00	11.90	3160.00	11.90	3162.00	11.89	3164.00	11.88	3166.00	11.88
3168.00	11.87	3170.00	11.87	3172.00	11.86	3174.00	11.86	3176.00	11.85	3178.00	11.85	3180.00	11.84	3182.00	11.84
3184.00	11.84	3186.00	11.84	3188.00	11.84	3190.00	11.85	3192.00	11.87	3194.00	11.89	3196.00	11.89	3198.00	11.90
3200.00	11.89	3202.00	11.92	3204.00	11.95	3206.00	11.95	3208.00	11.95	3210.00	11.94	3212.00	11.94	3214.00	11.93
3216.00	11.92	3218.00	11.92	3220.00	11.91	3222.00	11.90	3224.00	11.90	3226.00	11.89	3228.00	11.88	3230.00	11.87
3232.00	11.86	3234.00	11.85	3236.00	11.84	3238.00	11.84	3240.00	11.84	3242.00	11.83	3244.00	11.82	3246.00	11.82
3248.00	11.81	3250.00	11.83	3252.00	11.83	3254.00	11.83	3256.00	11.84	3258.00	11.84	3260.00	11.84	3262.00	11.84
3264.00	11.82	3266.00	11.83	3268.00	11.82	3270.00	11.83	3272.00	11.83	3274.00	11.84	3276.00	11.84	3278.00	11.84
3280.00	11.85	3282.00	11.84	3284.00	11.84	3286.00	11.84	3288.00	11.85	3290.00	11.85	3292.00	11.85	3294.00	11.86
3296.00	11.86	3298.00	11.84	3300.00	11.84	3302.00	11.84	3304.00	11.84	3306.00	11.84	3308.00	11.84	3310.00	11.84
3312.00	11.84	3314.00	11.84	3316.00	11.84	3318.00	11.84	3320.00	11.84	3322.00	11.83	3324.00	11.83	3326.00	11.83
3328.00	11.82	3330.00	11.83	3332.00	11.83	3334.00	11.83	3336.00	11.82	3338.00	11.82	3340.00	11.83	3342.00	11.82
3344.00	11.83	3346.00	11.83	3348.00	11.84	3350.00	11.84	3352.00	11.83	3354.00	11.83	3356.00	11.83	3358.00	11.83
3360.00	11.83	3362.00	11.84	3364.00	11.84	3366.00	11.84	3368.00	11.85	3370.00	11.85	3372.00	11.85	3374.00	11.85
3376.00	11.84	3378.00	11.84	3380.00	11.85	3382.00	11.85	3384.00	11.86	3386.00	11.86	3388.00	11.87	3390.00	11.87
3392.00	11.87	3394.00	11.87	3396.00	11.87	3398.00	11.86	3400.00	11.87	3402.00	11.87	3404.00	11.88	3406.00	11.89
3408.00	11.89	3410.00	11.89	3412.00	11.91	3414.00	11.91	3416.00	11.92	3418.00	11.93	3420.00	11.95	3422.00	11.95

Dist.	Elev.	Dist.	Elev.	Dist.	Elev.	Dist.	Elev.	Dist.	Elev.	Dist.	Elev.	Dist.	Elev.	Dist.	Elev.
3424.00	11.96	3426.00	11.96	3428.00	11.96	3430.00	11.96	3432.00	11.95	3434.00	11.96	3436.00	11.96	3438.00	11.96
3440.00	11.96	3442.00	11.95	3444.00	11.95	3446.00	11.94	3448.00	11.96	3450.00	11.98	3452.00	11.99	3454.00	12.01
3456.00	12.03	3458.00	12.04	3460.00	12.05	3462.00	12.05	3464.00	12.05	3466.00	12.05	3468.00	12.05	3470.00	12.05
3472.00	12.04	3474.00	12.06	3476.00	12.06	3478.00	12.07	3480.00	12.07	3482.00	12.07	3484.00	12.07	3486.00	12.06
3488.00	12.07	3490.00	12.07	3492.00	12.08	3494.00	12.08	3496.00	12.08	3498.00	12.09	3500.00	12.09	3502.00	12.08
3504.00	12.08	3506.00	12.08	3508.00	12.08	3510.00	12.08	3512.00	12.09	3514.00	12.10	3516.00	12.10	3518.00	12.10
3520.00	12.10	3522.00	12.10	3524.00	12.11	3526.00	12.11	3528.00	12.12	3530.00	12.13	3532.00	12.13	3534.00	12.13
3536.00	12.13	3538.00	12.14	3540.00	12.14	3542.00	12.13	3544.00	12.13	3546.00	12.13	3548.00	12.11	3550.00	12.10
3552.00	12.07	3554.00	12.06	3556.00	12.07	3558.00	12.08	3560.00	12.09	3562.00	12.10	3564.00	12.11	3566.00	12.11
3568.00	12.12	3570.00	12.06	3572.00	12.01	3574.00	12.03	3576.00	12.04	3578.00	12.05	3580.00	12.05	3582.00	12.06
3584.00	12.06	3586.00	12.05	3588.00	12.04	3590.00	12.03	3592.00	12.02	3594.00	12.02	3596.00	12.02	3598.00	12.02
3600.00	12.01	3602.00	11.99	3604.00	11.98	3606.00	11.94	3608.00	11.94	3610.00	11.93	3612.00	11.93	3614.00	11.92
3616.00	11.91	3618.00	11.90	3620.00	11.90	3622.00	11.90	3624.00	11.90	3626.00	11.90	3628.00	11.91	3630.00	11.90
3632.00	11.88	3634.00	11.87	3636.00	11.87	3638.00	11.86	3640.00	11.86	3642.00	11.85	3644.00	11.86	3646.00	11.86
3648.00	11.85	3650.00	11.85	3652.00	11.85	3654.00	11.86	3656.00	11.86	3658.00	11.87	3660.00	11.86	3662.00	11.86
3664.00	11.85	3666.00	11.84	3668.00	11.85	3670.00	11.85	3672.00	11.87	3674.00	11.89	3676.00	11.88	3678.00	11.88
3680.00	11.88	3682.00	11.89	3684.00	11.90	3686.00	11.91	3688.00	11.91	3690.00	11.91	3692.00	11.91	3694.00	11.92
3696.00	11.92	3698.00	11.93	3700.00	11.94	3702.00	11.94	3704.00	11.95	3706.00	11.95	3708.00	11.95	3710.00	11.95
3712.00	11.95	3714.00	11.96	3716.00	11.95	3718.00	11.95	3720.00	11.96	3722.00	11.97	3724.00	11.98	3726.00	11.98
3728.00	11.99	3730.00	12.00	3732.00	12.00	3734.00	11.99	3736.00	11.99	3738.00	11.99	3740.00	12.00	3742.00	12.00
3744.00	12.01	3746.00	12.02	3748.00	12.02	3750.00	12.03	3752.00	12.04	3754.00	12.05	3756.00	12.06	3758.00	12.06
3760.00	12.06	3762.00	12.06	3764.00	12.06	3766.00	12.06	3768.00	12.06	3770.00	12.06	3772.00	12.07	3774.00	12.08
3776.00	12.09	3778.00	12.10	3780.00	12.09	3782.00	12.12	3784.00	12.13	3786.00	12.14	3788.00	12.13	3790.00	12.14
3792.00	12.14	3794.00	12.14	3796.00	12.15	3798.00	12.15	3800.00	12.16	3802.00	12.16	3804.00	12.17	3806.00	12.17
3808.00	12.17	3810.00	12.15	3812.00	12.14	3814.00	12.13	3816.00	12.12	3818.00	12.11	3820.00	12.10	3822.00	12.09
3824.00	12.09	3826.00	12.09	3828.00	12.08	3830.00	12.07	3832.00	12.07	3834.00	12.06	3836.00	12.05	3838.00	12.03
3840.00	12.03	3842.00	12.02	3844.00	12.01	3846.00	12.02	3848.00	12.01	3850.00	12.01	3852.00	12.01	3854.00	12.01
3856.00	12.02	3858.00	12.02	3860.00	12.01	3862.00	12.00	3864.00	12.00	3866.					

*The National Aeronautics and Space Administration (NASA) Report CR-119 identifies an elevation of 10.97 feet at 1620 feet. This is considered a typographical error and has been corrected in Table 1. The elevation is 10.87 feet.

TABLE 2

SF28R SEVERE BUMP MODIFICATIONS PER ICAO ANNEX 14, SPECIFICATION 9.4.15

Distance	Original Elevation (ft)	Modified Elevation (ft)
1530	11.18	11.10
1532	11.17	11.11
1534	11.14	11.11
1536	11.14	11.07
1538	11.12	11.04

CS 25.493 Braked roll conditions

ED Decision 2003/2/RM

(a) An aeroplane with a tail wheel is assumed to be in the level attitude with the load on the main wheels, in accordance with Figure 6 of Appendix A. The limit vertical load factor is 1·2 at the design landing weight, and 1·0 at the design ramp weight. A drag reaction equal to the vertical reaction multiplied by a coefficient of friction of 0·8, must be combined with the vertical ground reaction and applied at the ground contact point.

(b) For an aeroplane with a nose wheel, the limit vertical load factor is 1·2 at the design landing weight, and 1·0 at the design ramp weight. A drag reaction equal to the vertical reaction, multiplied by a coefficient of friction of 0·8, must be combined with the vertical reaction and applied at the ground contact point of each wheel with brakes. The following two attitudes, in accordance with Figure 6 of Appendix A, must be considered:

(1) The level attitude with the wheels contacting the ground and the loads distributed between the main and nose gear. Zero pitching acceleration is assumed.

(2) The level attitude with only the main gear contacting the ground and with the pitching moment resisted by angular acceleration.

(c) A drag reaction lower than that prescribed in this paragraph may be used if it is substantiated that an effective drag force of 0·8 times the vertical reaction cannot be attained under any likely loading condition.

(d) An aeroplane equipped with a nose gear must be designed to withstand the loads arising from the dynamic pitching motion of the aeroplane due to sudden application of maximum braking force. The aeroplane is considered to be at design takeoff weight with the nose and main gears in contact with the ground, and with a steady state vertical load factor of 1·0. The steady state nose gear reaction must be combined with the maximum incremental nose gear vertical reaction caused by sudden application of maximum braking force as described in sub-paragraphs (b) and (c) of this paragraph.

(e) In the absence of a more rational analysis, the nose gear vertical reaction prescribed in subparagraph (d) of this paragraph must be calculated in accordance with the following formula:

$$V_N = \frac{W_T}{A+B}\left\{B + \frac{f\mu AE}{A+B+\mu E}\right\}$$

Where:

V_N = Nose gear vertical reaction

W_T = Design take-off weight

A = Horizontal distance between the c.g. of the aeroplane and the nose wheel.

B = Horizontal distance between the c.g. of the aeroplane and the line joining the centres of the main wheels.

E = Vertical height of the c.g. of the aeroplane above the ground in the 1·0 g static condition.

μ = Coefficient of friction of 0·8.

f = Dynamic response factor; 2·0 is to be used unless a lower factor is substantiated.

In the absence of other information, the dynamic response factor f may be defined by the equation.

$$f = 1 + exp\left[\frac{-\pi\xi}{\sqrt{1-\xi^2}}\right]$$

Where: ξ is the critical damping ratio of the rigid body pitching mode about the main landing gear effective ground contact point.

CS 25.495 Turning

ED Decision 2003/2/RM

In the static position, in accordance with Figure 7 of Appendix A, the aeroplane is assumed to execute a steady turn by nose gear steering, or by application of sufficient differential power, so that the limit load factors applied at the centre of gravity are 1·0 vertically and 0·5 laterally. The side ground reaction of each wheel must be 0·5 of the vertical reaction.

CS 25.497 Tail-wheel yawing

ED Decision 2003/2/RM

(a) A vertical ground reaction equal to the static load on the tail wheel, in combination with a side component of equal magnitude, is assumed.

(b) If there is a swivel, the tail wheel is assumed to be swivelled 90° to the aeroplane longitudinal axis with the resultant load passing through the axle.

(c) If there is a lock, steering device, or shimmy damper the tail wheel is also assumed to be in the trailing position with the side load acting at the ground contact point.

CS 25.499 Nose-wheel yaw and steering

ED Decision 2003/2/RM

(a) A vertical load factor of 1·0 at the aeroplane centre of gravity, and a side component at the nose wheel ground contact equal to 0·8 of the vertical ground reaction at that point are assumed.

(b) With the aeroplane assumed to be in static equilibrium with the loads resulting from the use of brakes on one side of the main landing gear, the nose gear, its attaching structure, and the fuselage structure forward of the centre of gravity must be designed for the following loads:

(1) A vertical load factor at the centre of gravity of 1·0.

(2) A forward acting load at the aeroplane centre of gravity of 0·8 times the vertical load on one main gear.

(3) Side and vertical loads at the ground contact point on the nose gear that are required for static equilibrium.

(4) A side load factor at the aeroplane centre of gravity of zero.

(c) If the loads prescribed in sub-paragraph (b) of this paragraph result in a nose gear side load higher than 0·8 times the vertical nose gear load, the design nose gear side load may be limited to 0·8 times the vertical load, with unbalanced yawing moments assumed to be resisted by aeroplane inertia forces.

(d) For other than the nose gear, its attaching structure, and the forward fuselage structure the loading conditions are those prescribed in sub-paragraph (b) of this paragraph, except that –

(1) A lower drag reaction may be used if an effective drag force of 0·8 times the vertical reaction cannot be reached under any likely loading condition; and

(2) The forward acting load at the centre of gravity need not exceed the maximum drag reaction on one main gear, determined in accordance with CS 25.493(b).

(e) With the aeroplane at design ramp weight, and the nose gear in any steerable position, the combined application of full normal steering torque and vertical force equal to 1·33 times the maximum static reaction on the nose gear must be considered in designing the nose gear, its attaching structure and the forward fuselage structure.

CS 25.503 Pivoting

ED Decision 2003/2/RM

(a) The aeroplane is assumed to pivot about one side of the main gear with the brakes on that side locked. The limit vertical load factor must be 1·0 and the coefficient of friction 0·8.

(b) The aeroplane is assumed to be in static equilibrium, with the loads being applied at the ground contact points, in accordance with Figure 8 of Appendix A.

CS 25.507 Reversed braking

ED Decision 2003/2/RM

(a) The aeroplane must be in a three point static ground attitude. Horizontal reactions parallel to the ground and directed forward must be applied at the ground contact point of each wheel with brakes. The limit loads must be equal to 0·55 times the vertical load at each wheel or to the load developed by 1·2 times the nominal maximum static brake torque, whichever is less.

(b) For aeroplanes with nose wheels, the pitching moment must be balanced by rotational inertia.

(c) For aeroplanes with tail wheels, the resultant of the ground reactions must pass through the centre of gravity of the aeroplane.

CS 25.509 Towing Loads

ED Decision 2003/2/RM

(a) The towing loads specified in sub-paragraph (d) of this paragraph must be considered separately. These loads must be applied at the towing fittings and must act parallel to the ground. In addition –

(1) A vertical load factor equal to 1·0 must be considered acting at the centre of gravity;

(2) The shock struts and tyres must be in their static positions; and

(3) With W_T as the design ramp weight, the towing load, F_{TOW} is –

(i) 0.3 W_T for W_T less than 30 000 pounds;

(ii) $\frac{6W_T + 450\,000}{70}$ for W_T between 30 000 and 100 000 pounds; and

(iii) 0·15 W_T for W_T over 100 000 pounds.

(b) For towing points not on the landing gear but near the plane of symmetry of the aeroplane, the drag and side tow load components specified for the auxiliary gear apply. For towing points located outboard of the main gear, the drag and side tow load components specified for the main gear apply. Where the specified angle of swivel cannot be reached, the maximum obtainable angle must be used.

(c) The towing loads specified in sub-paragraph (d) of this paragraph must be reacted as follows:

(1) The side component of the towing load at the main gear must be reacted by a side force at the static ground line of the wheel to which the load is applied.

(2) The towing loads at the auxiliary gear and the drag components of the towing loads at the main gear must be reacted as follows:

(i) A reaction with a maximum value equal to the vertical reaction must be applied at the axle of the wheel to which the load is applied. Enough aeroplane inertia to achieve equilibrium must be applied.

(ii) The loads must be reacted by aeroplane inertia.

(d) The prescribed towing loads are as specified in the following Table:

Tow Point	Position	Load		
		Magnitude	No.	Direction
Main gear		0·75 F_{TOW} per main gear unit	1 2 3 4	Forward, parallel to drag axis Forward, at 30° to drag axis Aft, parallel to drag axis Aft, at 30° to drag axis
Auxiliary gear	Swivelled forward	1·0 F_{TOW}	5 6	Forward Aft
	Swivelled aft		7 8	Forward Aft
	Swivelled 45° from forward	0·5 F_{TOW}	9 10	Forward, in plane of wheel Aft, in plane of wheel
	Swivelled 45° from aft		11 12	Forward, in plane of wheel Aft, in plane of wheel

CS 25.511 Ground load: unsymmetrical loads on multiple-wheel units

ED Decision 2003/2/RM

(a) *General*. Multiple-wheel landing gear units are assumed to be subjected to the limit ground loads prescribed in this Subpart under sub-paragraphs (b) through (f) of this paragraph. In addition –

(1) A tandem strut gear arrangement is a multiple-wheel unit; and

(2) In determining the total load on a gear unit with respect to the provisions of sub-paragraphs (b) through (f) of this paragraph, the transverse shift in the load centroid, due to unsymmetrical load distribution on the wheels, may be neglected.

(b) *Distribution of limit loads to wheels; tyres inflated*. The distribution of the limit loads among the wheels of the landing gear must be established for each landing, taxying, and ground handling condition, taking into account the effects of the following factors:

(1) The number of wheels and their physical arrangements. For truck type landing gear units, the effects of any see-saw motion of the truck during the landing impact must be considered in determining the maximum design loads for the fore and aft wheel pairs.

(2) Any differentials in tyre diameters resulting from a combination of manufacturing tolerances, tyre growth, and tyre wear. A maximum tyre-diameter differential equal to

two-thirds of the most unfavourable combination of diameter variations that is obtained when taking into account manufacturing tolerances, tyre growth and tyre wear, may be assumed.

(3) Any unequal tyre inflation pressure, assuming the maximum variation to be ±5% of the nominal tyre inflation pressure.

(4) A runway crown of zero and a runway crown having a convex upward shape that may be approximated by a slope of 1·5% with the horizontal. Runway crown effects must be considered with the nose gear unit on either slope of the crown.

(5) The aeroplane attitude.

(6) Any structural deflections.

(c) *Deflated tyres.* The effect of deflated tyres on the structure must be considered with respect to the loading conditions specified in sub-paragraphs (d) through (f) of this paragraph, taking into account the physical arrangement of the gear components. In addition –

(1) The deflation of any one tyre for each multiple wheel landing gear unit, and the deflation of any two critical tyres for each landing gear unit using four or more wheels per unit, must be considered; and

(2) The ground reactions must be applied to the wheels with inflated tyres except that, for multiple-wheel gear units with more than one shock strut, a rational distribution of the ground reactions between the deflated and inflated tyres, accounting for the differences in shock strut extensions resulting from a deflated tyre, may be used.

(d) *Landing conditions*. For one and for two deflated tyres, the applied load to each gear unit is assumed to be 60% and 50%, respectively, of the limit load applied to each gear for each of the prescribed landing conditions. However, for the drift landing condition of CS 25.485, 100% of the vertical load must be applied.

(e) *Taxying and ground handling conditions.* For one and for two deflated tyres –

(1) The applied side or drag load factor, or both factors, at the centre of gravity must be the most critical value up to 50% and 40%, respectively, of the limit side or drag load factors, or both factors, corresponding to the most severe condition resulting from consideration of the prescribed taxying and ground handling conditions.

(2) For the braked roll conditions of CS 25.493(a) and (b)(2), the drag loads on each inflated tyre may not be less than those at each tyre for the symmetrical load distribution with no deflated tyres;

(3) The vertical load factor at the centre of gravity must be 60% and 50% respectively, of the factor with no deflated tyres, except that it may not be less than 1 g; and

(4) Pivoting need not be considered.

(f) *Towing conditions*. For one and for two deflated tyres, the towing load, F_{TOW}, must be 60% and 50% respectively, of the load prescribed.

CS 25.519 Jacking and tie-down provisions

ED Decision 2003/2/RM

(a) *General*. The aeroplane must be designed to withstand the limit load conditions resulting from the static ground load conditions of sub-paragraph (b) of this paragraph and, if applicable, sub-

paragraph (c) of this paragraph at the most critical combinations of aeroplane weight and centre of gravity. The maximum allowable load at each jack pad must be specified.

(b) *Jacking*. The aeroplane must have provisions for jacking and must withstand the following limit loads when the aeroplane is supported on jacks:

(1) For jacking by the landing gear at the maximum ramp weight of the aeroplane, the aeroplane structure must be designed for a vertical load of 1·33 times the vertical static reaction at each jacking point acting singly and in combination with a horizontal load of 0·33 times the vertical static reaction applied in any direction.

(2) For jacking by other aeroplane structure at maximum approved jacking weight:

(i) The aeroplane structure must be designed for a vertical load of 1·33 times the vertical reaction at each jacking point acting singly and in combination with a horizontal load of 0·33 times the vertical static reaction applied in any direction.

(ii) The jacking pads and local structure must be designed for a vertical load of 2·0 times the vertical static reaction at each jacking point, acting singly and in combination with a horizontal load of 0·33 times the vertical static reaction applied in any direction.

(c) *Tie-down.* If tie-down points are provided, the main tie-down points and local structure must withstand the limit loads resulting from a 120 km/h (65-knot) horizontal wind from any direction.

EMERGENCY LANDING CONDITIONS

CS 25.561 General

ED Decision 2003/2/RM

(a) The aeroplane, although it may be damaged in emergency landing conditions on land or water, must be designed as prescribed in this paragraph to protect each occupant under those conditions.

(b) The structure must be designed to give each occupant every reasonable chance of escaping serious injury in a minor crash landing when –

(1) Proper use is made of seats, belts, and all other safety design provisions;

(2) The wheels are retracted (where applicable); and

(3) The occupant experiences the following ultimate inertia forces acting separately relative to the surrounding structure:

(i) Upward, 3·0g

(ii) Forward, 9·0g

(iii) Sideward, 3·0g on the airframe and 4·0g on the seats and their attachments

(iv) Downward, 6·0g

(v) Rearward, 1·5g (See AMC 25.561(b)(3).)

(c) For equipment, cargo in the passenger compartments and any other large masses, the following apply:

(1) These items must be positioned so that if they break loose they will be unlikely to:

(i) Cause direct injury to occupants;

(ii) Penetrate fuel tanks or lines or cause fire or explosion hazard by damage to adjacent systems; or

(iii) Nullify any of the escape facilities provided for use after an emergency landing.

(2) When such positioning is not practical (e.g. fuselage mounted engines or auxiliary power units) each such item of mass must be restrained under all loads up to those specified in sub-paragraph (b)(3) of this paragraph. The local attachments for these items should be designed to withstand 1·33 times the specified loads if these items are subject to severe wear and tear through frequent removal (e.g. quick change interior items).

(d) Seats and items of mass (and their supporting structure) must not deform under any loads up to those specified in sub-paragraph (b)(3) of this paragraph in any manner that would impede subsequent rapid evacuation of occupants. (See AMC 25.561(d).)

AMC 25.561 General

ED Decision 2003/2/RM

In complying with the provisions of CS 25.561(b) & (c), the loads arising from the restraint of seats and items of equipment etc. should be taken into the structure to a point where the stresses can be dissipated (e.g. for items attached to the fuselage floor, the load paths from the attachments through to the fuselage primary structure should be taken into account).

AMC 25.561(b)(3) Commercial Accommodation Equipment

ED Decision 2003/2/RM

Commercial accommodation equipment complying only with FAR 25.561 need additional substantiation by analysis, tests or combination thereof to cover the 1·33 factor for their attachments as specified in CS 25.561(c).

AMC 25.561(d) General

ED Decision 2003/2/RM

For the local attachments of seats and items of mass it should be shown by analysis and/or tests that under the specified load conditions, the intended retaining function in each direction is still available.

CS 25.562 Emergency landing dynamic conditions

ED Decision 2003/2/RM

(a) The seat and restraint system in the aeroplane must be designed as prescribed in this paragraph to protect each occupant during an emergency landing condition when –

(1) Proper use is made of seats, safety belts, and shoulder harnesses provided for in the design; and

(2) The occupant is exposed to loads resulting from the conditions prescribed in this paragraph.

(b) With the exception of flight deck crew seats, each seat type design approved for occupancy must successfully complete dynamic tests or be demonstrated by rational analysis based on dynamic tests of a similar type seat, in accordance with each of the following emergency landing conditions. The tests must be conducted with an occupant simulated by a 77kg (170 lb) anthropomorphic, test dummy sitting in the normal upright position:

(1) A change in downward vertical velocity, (Δv) of not less than 10·7 m/s, (35 ft/s) with the aeroplane's longitudinal axis canted downward 30 degrees with respect to the horizontal plane and with the wings level. Peak floor deceleration must occur in not more than 0·08 seconds after impact and must reach a minimum of 14 g.

(2) A change in forward longitudinal velocity (Δv) of not less than 13·4 m/s, (44 ft/s) with the aeroplane's longitudinal axis horizontal and yawed 10 degrees either right or left, whichever would cause the greatest likelihood of the upper torso restraint system (where installed) moving off the occupant's shoulder, and with the wings level. Peak floor deceleration must occur in not more than 0·09 seconds after impact and must reach a minimum of 16 g. Where floor rails or floor fittings are used to attach the seating devices to the test fixture, the rails or fittings must be misaligned with respect to the adjacent set of rails or fittings by at least 10 degrees vertically (i.e. out of parallel) with one rolled 10 degrees.

(c) The following performance measures must not be exceeded during the dynamic tests conducted in accordance with sub-paragraph (b) of this paragraph:

(1) Where upper torso straps are used tension loads in individual straps must not exceed 794 kg. (1750lb) If dual straps are used for restraining the upper torso, the total strap tension loads must not exceed 907kg (2000 lb)).

(2) The maximum compressive load measured between the pelvis and the lumbar column of the anthropomorphic dummy must not exceed 680 kg. (1500lb)

(3) The upper torso restraint straps (where installed) must remain on the occupant's shoulder during the impact.

(4) The lap safety belt must remain on the occupant's pelvis during the impact.

(5) Each occupant must be protected from serious head injury under the conditions prescribed in sub-paragraph (b) of this paragraph. Where head contact with seats or other structure can occur, protection must be provided so that the head impact does not exceed a Head Injury Criterion (HIC) of 1000 units. The level of HIC is defined by the equation –

$$HIC = \left\{ (t_2 - t_1) \left[\frac{1}{(t_2 - t_1)} \int_{t_1}^{t_2} a(t)dt \right]^{2.5} \right\}_{max}$$

Where –

t_1 is the initial integration time,

t_2 is the final integration time, and

a(t) is the total acceleration vs. time curve for the head strike, and where

(t) is in seconds, and (a) is in units of gravity (g).

(6) Where leg injuries may result from contact with seats or other structure, protection must be provided to prevent axially compressive loads exceeding 1021 kg (2250 lb) in each femur.

(7) The seat must remain attached at all points of attachment, although the structure may have yielded.

(8) Seats must not yield under the tests specified in sub-paragraphs (b)(1) and (b)(2) of this paragraph to the extent they would impede rapid evacuation of the aeroplane occupants.

CS 25.563 Structural ditching provisions

ED Decision 2003/2/RM

Structural strength considerations of ditching provisions must be in accordance with CS 25.801(e).

FATIGUE EVALUATION

CS 25.571 Damage-tolerance and fatigue evaluation of structure

ED Decision 2003/2/RM

(a) *General.* An evaluation of the strength, detail design, and fabrication must show that catastrophic failure due to fatigue, corrosion, or accidental damage, will be avoided throughout the operational life of the aeroplane. This evaluation must be conducted in accordance with the provisions of sub-paragraphs (b) and (e) of this paragraph, except as specified in sub-paragraph (c) of this paragraph, for each part of the structure which could contribute to a catastrophic failure (such as wing, empennage, control surfaces and their systems, the fuselage, engine mounting, landing gear, and their related primary attachments). (See AMC 25.571(a), (b) and (e).) For turbine engine powered aeroplanes, those parts which could contribute to a catastrophic failure must also be evaluated under sub-paragraph (d) of this paragraph. In addition, the following apply:

(1) Each evaluation required by this paragraph must include –

(i) The typical loading spectra, temperatures, and humidities expected in service;

(ii) The identification of principal structural elements and detail design points, the failure of which could cause catastrophic failure of the aeroplane; and

(iii) An analysis, supported by test evidence, of the principal structural elements and detail design points identified in sub-paragraph (a)(1)(ii) of this paragraph.

(2) The service history of aeroplanes of similar structural design, taking due account of differences in operating conditions and procedures, may be used in the evaluations required by this paragraph.

(3) Based on the evaluations required by this paragraph, inspections or other procedures must be established as necessary to prevent catastrophic failure, and must be included in the Airworthiness Limitations Section of the Instructions for Continued Airworthiness required by CS 25.1529.

(b) *Damage-tolerance (fail-safe) evaluation*. The evaluation must include a determination of the probable locations and modes of damage due to fatigue, corrosion, or accidental damage. The determination must be by analysis supported by test evidence and (if available) service experience. Damage at multiple sites due to prior fatigue exposure must be included where the design is such that this type of damage can be expected to occur. The evaluation must incorporate repeated load and static analyses supported by test evidence. The extent of damage for residual strength evaluation at any time within the operational life must be consistent with the initial detectability and subsequent growth under repeated loads. The residual strength evaluation must show that the remaining structure is able to withstand loads (considered as static ultimate loads) corresponding to the following conditions:

(1) The limit symmetrical manoeuvring conditions specified in CS 25.337 up to V_C and in CS 25.345.

(2) The limit gust conditions specified in CS 25.341 at the specified speeds up to V_C and in CS 25.345.

(3) The limit rolling conditions specified in CS 25.349 and the limit unsymmetrical conditions specified in CS 25.367 and CS 25.427(a) through (c), at speeds up to V_C.

(4) The limit yaw manoeuvring conditions specified in CS 25.351 at the specified speeds up to V_C.

(5) For pressurised cabins, the following conditions:

(i) The normal operating differential pressure combined with the expected external aerodynamic pressures applied simultaneously with the flight loading conditions specified in sub-paragraphs (b)(1) to (b)(4) of this paragraph if they have a significant effect.

(ii) The maximum value of normal operating differential pressure (including the expected external aerodynamic pressures during 1 g level flight) multiplied by a factor of 1·15 omitting other loads.

(6) For landing gear and directly-affected airframe structure, the limit ground loading conditions specified in CS 25.473, CS 25.491 and CS 25.493.

If significant changes in structural stiffness or geometry, or both, follow from a structural failure, or partial failure, the effect on damage tolerance must be further investigated. (See AMC 25.571(b) and (e).) The residual strength requirements of this sub-paragraph (b) apply, where the critical damage is not readily detectable. On the other hand, in the case of damage which is readily detectable within a short period, smaller loads than those of sub-paragraphs (b)(1) to (b)(6) inclusive may be used by agreement with the Authority. A probability approach may be used in these latter assessments, substantiating that catastrophic failure is extremely improbable. (See AMC 25.571(a), (b) and (e) paragraph 2.1.2.)

(c) *Fatigue (safe-life) evaluation*. Compliance with the damage-tolerance requirements of sub-paragraph (b) of this paragraph is not required if the applicant establishes that their application for particular structure is impractical. This structure must be shown by analysis, supported by test evidence, to be able to withstand the repeated loads of variable magnitude expected during its service life without detectable cracks. Appropriate safe-life scatter factors must be applied.

(d) *Sonic fatigue strength.* It must be shown by analysis, supported by test evidence, or by the service history of aeroplanes of similar structural design and sonic excitation environment, that –

(1) Sonic fatigue cracks are not probable in any part of the flight structure subject to sonic excitation; or

(2) Catastrophic failure caused by sonic cracks is not probable assuming that the loads prescribed in sub-paragraph (b) of this paragraph are applied to all areas affected by those cracks.

(e) *Damage-tolerance (discrete source) evaluation.* The aeroplane must be capable of successfully completing a flight during which likely structural damage occurs as a result of –

(1) Bird impact as specified in CS 25.631;

(2) Reserved

(3) Reserved

(4) Sudden decompression of compartments as specified in CS 25.365(e) and (f).

The damaged structure must be able to withstand the static loads (considered as ultimate loads) which are reasonably expected to occur at the time of the occurrence and during the completion of the flight. Dynamic effects on these static loads need not be considered.

Corrective action to be taken by the pilot following the incident, such as limiting manoeuvres, avoiding turbulence, and reducing speed, may be considered. If significant changes in structural stiffness or geometry, or both, follow from a structural failure or partial failure, the effect on damage tolerance must be further investigated. (See AMC 25.571(a), (b) and (e), paragraph 2.7.2 and AMC 25.571(b) and (e).)

AMC 25.571(a), (b) and (e) Damage tolerance and fatigue evaluation of structure

ED Decision 2006/005/R

1 *Introduction*

1.1 The contents of this AMC are considered by the Agency in determining compliance with the damage-tolerance and fatigue requirements of CS 25.571.

1.1.1 Although a uniform approach to the evaluation required by CS 25.571 is desirable, it is recognised that in such a complex field new design features and methods of fabrication, new approaches to the evaluation, and new configurations could necessitate variations and deviations from the procedures described in this AMC.

1.1.2 Damage-tolerance design is required, unless it entails such complications that an effective damage-tolerant structure cannot be achieved within the limitations of geometry, inspectability, or good design practice. Under these circumstances, a design that complies with the fatigue evaluation (safe-life) requirements is used. Typical examples of structure that might not be conducive to damage-tolerance design are landing gear, engine mounts, and their attachments.

1.1.3 Experience with the application of methods of fatigue evaluation indicate that a test background should exist in order to achieve the design objective. Even under the damage-tolerance method discussed in paragraph 2, 'Damage-tolerance (fail-safe) evaluation', it is the general practice within industry to conduct damage-tolerance tests for design information and guidance purposes. Damage location and growth data should also be considered in establishing a recommended inspection programme.

1.1.4 Assessing the fatigue characteristics of certain structural elements, such as major fittings, joints, typical skin units, and splices, to ensure that the anticipated service life can reasonably be attained, is needed for structure to be evaluated under CS 25.571(c).

1.2 *Typical Loading Spectra Expected in Service*. The loading spectrum should be based on measured statistical data of the type derived from government and industry load history studies and, where insufficient data are available, on a conservative estimate of the anticipated use of the aeroplane. The principal loads that should be considered in establishing a loading spectrum are flight loads (gust and manoeuvre), ground loads (taxiing, landing impact, turning, engine runup, braking, and towing) and pressurisation loads. The development of the loading spectrum includes the definition of the expected flight plan which involves climb, cruise, descent, flight times, operational speeds and altitudes, and the approximate time to be spent in each of the operating regimes. Operations for crew training, and other pertinent factors, such as the dynamic stress characteristics of any flexible structure excited by turbulence, should also be considered. For pressurised cabins, the loading spectrum should include the repeated application of

the normal operating differential pressure, and the superimposed effects of flight loads and external aerodynamic pressures.

1.3 *Components to be Evaluated*. In assessing the possibility of serious fatigue failures, the design should be examined to determine probable points of failure in service. In this examination, consideration should be given, as necessary, to the results of stress analyses, static tests, fatigue tests, strain gauge surveys, tests of similar structural configurations, and service experience. Service experience has shown that special attention should be focused on the design details of important discontinuities, main attachment fittings, tension joints, splices, and cutouts such as windows, doors and other openings. Locations prone to accidental damage (such as that due to impact with ground servicing equipment near aeroplane doors) or to corrosion should also be considered.

1.4 *Analyses and Tests*. Unless it is determined from the foregoing examination that the normal operating stresses in specific regions of the structure are of such a low order that serious damage growth is extremely improbable, repeated load analyses or tests should be conducted on structure representative of components or sub-components of the wing, control surfaces, empennage, fuselage, landing gear, and their related primary attachments. Test specimens should include structure representative of attachment fittings, major joints, changes in section, cutouts, and discontinuities. Any method used in the analyses should be supported, as necessary, by test or service experience. Generally it will be required to substantiate the primary structure against the provisions of CS 25.571(b) and (c) by representative testing. The nature and extent of tests on complete structures or on portions of the primary structure will depend upon applicable previous design and structural tests, and service experience with similar structures. The scope of the analyses and supporting test programmes should be agreed with the Agency.

1.5 *Repeated Load Testing*. In the event of any repeated load testing necessary to support the damage tolerance or safe-life objectives of CS 25.571(b) and (c) respectively not being concluded at the issuance of type certificate, at least one year of safe operation should be substantiated at the time of certification. In order not to invalidate the certificate of airworthiness the fatigue substantiation should stay sufficiently ahead of the service exposure of the lead aeroplane.

2 *Damage-tolerance (Fail-safe) Evaluation*

2.1 *General.* The damage-tolerance evaluation of structure is intended to ensure that should serious fatigue, corrosion, or accidental damage occur within the operational life of the aeroplane, the remaining structure can withstand reasonable loads without failure or excessive structural deformation until the damage is detected. Included are the considerations historically associated with fail-safe design. The evaluation should encompass establishing the components which are to be designed as damage-tolerant, defining the loading conditions and extent of damage, conducting sufficient representative tests and/or analyses to substantiate the design objectives (such as life to crack-initiation, crack propagation rate and residual strength) have been achieved and establishing data for inspection programmes to ensure detection of damage. Interpretation of the test results should take into account the scatter in crack propagation rates as well as in lives to crack-initiation. Test results should be corrected to allow for variations between the specimen and the aeroplane component thickness and sizes. This evaluation applies to either single or multiple load path structure.

2.1.1 Design features which should be considered in attaining a damage-tolerant structure include the following:

a. Multiple load path construction and the use of crack stoppers to control the rate of crack growth, and to provide adequate residual static strength;

b. Materials and stress levels that, after initiation of cracks, provide a controlled slow rate of crack propagation combined with high residual strength. For single load path discrete items, such as control surface hinges, wing spar joints or stabiliser pivot fittings the failure of which could be catastrophic, it should be clearly demonstrated that cracks starting from material flaws, manufacturing errors or accidental damage (including corrosion) have been properly accounted for in the crack propagation estimate and inspection method;

c. Arrangement of design details to ensure a sufficiently high probability that a failure in any critical structural element will be detected before the strength has been reduced below the level necessary to withstand the loading conditions specified in CS 25.571(b) so as to allow replacement or repair of the failed elements; and

d. Provisions to limit the probability of concurrent multiple damage, particularly after long service, which could conceivably contribute to a common fracture path. The achievement of this would be facilitated by ensuring sufficient life to crack-initiation. Examples of such multiple damage are –

i. A number of small cracks which might coalesce to form a single long crack;

ii. Failures, or partial failures, in adjacent areas, due to the redistribution of loading following a failure of a single element; and

iii. Simultaneous failure, or partial failure, of multiple load path discrete elements, working at similar stress levels.

In practice it may not be possible to guard against the effects of multiple damage and fail-safe substantiation may be valid only up to a particular life which would preclude multiple damage.

e. The aeroplane may function safely with an element missing. This feature would be admitted only, provided its separation will not prevent continued safe flight and landing and the probability of occurrence is acceptably low.

2.1.2 In the case of damage which is readily detectable within a short period (50 flights, say) for which CS 25.571(b) allows smaller loads to be used, this relates to damage which is large enough to be detected by obvious visual indications during walk around, or by indirect means such as cabin pressure loss, cabin noise, or fuel leakage. In such instances, and in the absence of a probability approach the residual load levels except for the trailing edge flaps may be reduced to not less than the following:

a. The maximum normal operating differential pressure (including the expected external aerodynamic pressures under 1g level flight) multiplied by a factor of 1·10 omitting other loads.

b. 85% of the limit flight manoeuvre and ground conditions of CS 25.571(b)(1) to (6) inclusive, excluding (5)(ii) and separately 75% of the limit gust velocities (vertical or lateral) as specified at speeds up to V_C in

CS 25.571(b)(2) and (b)(5)(i). On the other hand if the probability approach is used the residual load levels may not in any case be lower than the values given in paragraph 2.7.2 of this AMC for one flight exposure. In the case where fatigue damage is arrested at a readily detectable size following rapid crack growth or a sudden load path failure under the application of high loads, the structure must be able to withstand the loads defined in CS 25.571(b)(1) to (6) inclusive up to that size of damage. For the subsequent growth of that damage, lower loads as stated above may be used.

2.2 *Identification of Principal Structural Elements*. Principal structural elements are those which contribute significantly to carrying flight, ground, and pressurisation loads, and whose failure could result in catastrophic failure of the aeroplane. Typical examples of such elements are as follows:

2.2.1 *Wing and empennage*

a. Control surfaces, slats, flaps and their attachment hinges and fittings;

b. Integrally stiffened plates;

c. Primary fittings;

d. Principal splices;

e. Skin or reinforcement around cutouts or discontinuities;

f. Skin-stringer combinations;

g. Spar caps; and

h. Spar webs.

2.2.2 *Fuselage*

a. Circumferential frames and adjacent skin;

b. Door frames;

c. Pilot window posts;

d. Pressure bulkheads;

e. Skin and any single frame or stiffener element around a cutout;

f. Skin or skin splices, or both, under circumferential loads;

g. Skin or skin splices, or both, under fore-and-aft loads;

h. Skin around a cutout;

i. Skin and stiffener combinations under fore-and-aft loads; and

j. Window frames.

2.3 *Extent of Damage*. Each particular design should be assessed to establish appropriate damage criteria in relation to inspectability and damage-extension characteristics. In any damage determination, including those involving multiple cracks, it is possible to establish the extent of damage in terms of detectability with the inspection techniques to be used, the associated initially detectable crack size, the residual strength capabilities of the structure, and the likely damage-extension rate considering the expected stress redistribution under the repeated loads expected in service and with the expected inspection frequency. Thus, an obvious partial failure could be considered to be the

extent of the damage or residual strength assessment, provided a positive determination is made that the fatigue cracks will be detectable by the available inspection techniques at a sufficiently early stage of the crack development. In a pressurised fuselage, an obvious partial failure might be detectable through the inability of the cabin to maintain operating pressure or controlled decompression after occurrence of the damage. The following are typical examples of partial failures which should be considered in the evaluation:

2.3.1 Detectable skin cracks emanating from the edge of structural openings or cutouts;

2.3.2 A detectable circumferential or longitudinal skin crack in the basic fuselage structure;

2.3.3 Complete severence of interior frame elements or stiffeners in addition to a detectable crack in the adjacent skin;

2.3.4 A detectable failure of one element where dual construction is utilised in components such as spar caps, window posts, window or door frames, and skin structure;

2.3.5 The presence of a detectable fatigue failure in at least the tension portion of the spar web or similar element; and

2.3.6 The detectable failure of a primary attachment, including a control surface hinge and fitting.

2.4 *Inaccessible Areas*. Every reasonable effort should be made to ensure inspectability of all structural parts, and to qualify them under the damage-tolerance provisions. In those cases where inaccessible and uninspectable blind areas exist, and suitable damage tolerance cannot practically be provided to allow for extension of damage into detectable areas, the structure should be shown to comply with the fatigue (safe-life) requirements in order to ensure its continued airworthiness. In this respect particular attention should be given to the effects of corrosion.

2.5 *Testing of Principal Structural Elements*. The nature and extent of tests on complete structures or on portions of the primary structure will depend upon applicable previous design, construction, tests, and service experience, in connection with similar structures. Simulated cracks should be as representative as possible of actual fatigue damage. Where it is not practical to produce actual fatigue cracks, damage can be simulated by cuts made with a fine saw, sharp blade, guillotine, or other suitable means. In those cases where bolt failure, or its equivalent, is to be simulated as part of a possible damage configuration in joints or fittings, bolts can be removed to provide that part of the simulation, if this condition would be representative of an actual failure under typical load. Where accelerated crack propagation tests are made, the possibility of creep cracking under real time pressure conditions should be recognised especially as the crack approaches its critical length.

2.6 *Identification of Locations to be Evaluated*. The locations of damage to structure for damagetolerances evaluation should be identified as follows:

2.6.1 *Determination of General Damage Locations*. The location and modes of damage can be determined by analysis or by fatigue tests on complete structures or subcomponents. However, tests might be necessary when the basis for analytical prediction is not reliable, such as for complex components. If less than the complete structure is tested, care should be taken to ensure that the internal loads and boundary conditions are valid. Any tests should be continued sufficiently

beyond the expected service life to ensure that, as far as practicable, the likely locations and extent of crack initiation are discovered.

a. If a determination is made by analysis, factors such as the following should be taken into account:

i. Strain data on undamaged structure to establish points of high stress concentration as well as the magnitude of the concentration;

ii. Locations where permanent deformation occurred in static tests;

iii. Locations of potential fatigue damage identified by fatigue analysis; and

iv. Design details which service experience of similarly designed components indicate are prone to fatigue or other damage.

b. In addition, the areas of probable damage from sources such as corrosion, disbonding, accidental damage or manufacturing defects should be determined from a review of the design and past service experience.

2.6.2 *Selection of Critical Damage Areas*. The process of actually locating where damage should be simulated in principal structural elements identified in paragraph 2.2 of this AMC should take into account factors such as the following:

a. Review analysis to locate areas of maximum stress and low margin of safety;

b. Selecting locations in an element where the stresses in adjacent elements would be the maximum with the damage present;

c. Selecting partial fracture locations in an element where high stress concentrations are present in the residual structure; and

d. Selecting locations where detection would be difficult.

2.7 *Damage-tolerance Analysis and Tests*. It should be determined by analysis, supported by test evidence, that the structure with the extent of damage established for residual strength evaluation can withstand the specified design limit loads (considered as ultimate loads), and that the damage growth rate under the repeated loads expected in service (between the time at which the damage becomes initially detectable and the time at which the extent of damage reaches the value for residual strength evaluation) provides a practical basis for development of the inspection programme and procedures described in paragraph 2.8 of this AMC. The repeated loads should be as defined in the loading, temperature, and humidity spectra. The loading conditions should take into account the effects of structural flexibility and rate of loading where they are significant.

2.7.1 The damage-tolerance characteristics can be shown analytically by reliable or conservative methods such as the following:

a. By demonstrating quantitative relationships with structure already verified as damage tolerant;

b. By demonstrating that the damage would be detected before it reaches the value for residual strength evaluation; or

c. By demonstrating that the repeated loads and limit load stresses do not exceed those of previously verified designs of similar configuration, materials and inspectability.

2.7.2 The maximum extent of immediately obvious damage from discrete sources should be determined and the remaining structure shown to have static strength for the maximum load (considered as ultimate load) expected during the completion of the flight. In the absence of a rational analysis the following ultimate loading conditions should be covered:

a. *At the time of the incident*:

i. The maximum normal operating differential pressure (including the expected external aerodynamic pressures during 1 g level flight) multiplied by a factor 1·1 combined with 1 g flight loads.

ii. The aeroplane, assumed to be in 1g level flight should be shown to be able to survive the overswing condition due to engine thrust asymmetry and pilot corrective action taking into account any damage to the flight controls which it is presumed the aeroplane has survived.

b. *Following the incident:* 70% limit flight manoeuvre loads and, separately, 40% of the limit gust velocity (vertical or lateral) as specified at V_C up to the maximum likely operational speed following failure, each combined with the maximum appropriate cabin differential pressure (including the expected external aerodynamic pressures). Further, any loss in structural stiffness which might arise should be shown to result in no dangerous reduction in freedom from flutter up to speed V_C/M_C.

2.8 *Inspection.* Detection of damage before it becomes dangerous is the ultimate control in ensuring the damage-tolerance characteristics of the structure. Therefore, the applicant should provide sufficient guidance information to assist operators in establishing the frequency, extent, and methods of inspection of the critical structure, and this kind of information must, under CS 25.571(a)(3), be included in the maintenance manual required by CS 25.1529. Due to the inherent complex interactions of the many parameters affecting damage tolerance, such as operating practices, environmental effects, load sequence on crack growth, and variations in inspection methods, related operational experience should be taken into account in establishing inspection procedures. It is extremely important to ensure by regular inspection the detection of damage in areas vulnerable to corrosion or accidental damage. However for crack initiation arising from fatigue alone, the frequency and extent of the inspections may be reduced during the period up to the demonstrated crack-free life of the part of the structure, including appropriate scatter factors (see paragraph 3.2). Comparative analysis can be used to guide the changes from successful past practice when necessary. Therefore, maintenance and inspection requirements should recognise the dependence on experience and should be specified in a document that provides for revision as a result of operational experience, such as the one containing the Manufacturers Recommended Structural Inspection Programme.

3 *Fatigue (Safe-Life) Evaluation*

3.1 Reserved

3.2 *Fatigue (Safe life) evaluation*

3.2.1 *General*. The evaluation of structure under the following fatigue (safe-life) strength evaluation methods is intended to ensure that catastrophic fatigue failure, as a result of the repeated loads of variable magnitude expected in service, will be avoided throughout the structure's operational life. Under these methods the

fatigue life of the structure should be determined. The evaluation should include the following:

a. Estimating, or measuring the expected loading spectra for the structure;

b. Conducting a structural analysis including consideration of the stress concentration effects;

c. Performing fatigue testing of structure which cannot be related to a test background to establish response to the typical loading spectrum expected in service;

d. Determining reliable replacement times by interpreting the loading history, variable load analyses, fatigue test data, service experience, and fatigue analysis;

e. Evaluating the possibility of fatigue initiation from sources such as corrosion, stress corrosion, disbonding, accidental damage and manufacturing defects based on a review of the design, quality control and past service experience; and

f. Providing necessary maintenance programmes and replacement times to the operators. The maintenance programme should be included in Instructions for Continued Airworthiness in accordance with CS 25.1529.

3.2.2 *Scatter Factor for Safe-Life Determination.* In the interpretation of fatigue analyses and test data, the effect of variability should, under CS 25.571(c), be accounted for by an appropriate scatter factor. In this process it is appropriate that the applicant justify the scatter factor chosen for any safe-life part. The following guidance is provided (see Figure 1):

a. The base scatter factors applicable to test results are: BSF_1 = 3.0, and BSF_2 = (see paragraph 3.2.2(e) of this AMC). If the applicant can meet the requirements of 3.2.2(c) of this AMC he may use BSF_1 or, at his option, BSF_2.

b. The base scatter factor, BSF_1, is associated with test results of one representative test specimen.

c. *Justification for use of BSF_1.* BSF_1 may only be used if the following criteria are met:

i. *Understanding of load paths and failure modes.* Service and test experience of similar in-service components that were designed using similar design criteria and methods should demonstrate that the load paths and potential failure modes of the components are well understood.]

[ii. *Control of design, material, and manufacturing process quality.* The applicant should demonstrate that his quality system (e.g. design, process control, and material standards) ensures the scatter in fatigue properties is controlled, and that the design of the fatigue critical areas of the part account for the material scatter.

iii. *Representativeness of the test specimen.*

A. The test article should be full scale (component or sub-component) and represent that portion of the production aircraft requiring test. All differences between the test article

and production article should be accounted for either by analysis supported by test evidence or by testing itself.

B. Construction details, such as bracket attachments, clips, etc., should be accounted for, even though the items themselves may be non-load bearing.

C. Points of load application and reaction should accurately reflect those of the aircraft, ensure correct behaviour of the test article, and guard against uncharacteristic failures.

D. Systems used to protect the structure against environmental degradation can have a negative effect on fatigue life and therefore should be included as part of the test article.

d. *Adjustments to base scatter factor BSF_1.* Having satisfied the criteria of paragraph 3.2.2(c), justifying the use of BSF_1, the base value of 3.0 should be adjusted to account for the following considerations, as necessary, where not wholly taken into account by design analysis. As a result of the adjustments, the final scatter factor may be less than, equal to, or greater than 3.0.

i. *Material fatigue scatter.* Material properties should be investigated up to a 99% probability of survival and a 95% level of confidence.

ii. *Spectrum severity.* Test load spectrum should be derived based on a spectrum sensitive analysis accounting for variations in both utilisation (i.e. aircraft weight, cg etc.) and occurrences / size of loads. The test loads spectrum applied to the structure should be demonstrated to be conservative when compared to the usage expected in service.

iii. *Number of representative test specimens.* Well established statistical methods should be used that associate the number of items tested with the distribution chosen, to obtain an adjustment to the base scatter factor.

e. If the applicant cannot satisfy the intent of all of paragraph 3.2.2(c) of this AMC, BSF_2 should be used.

i. The applicant should propose scatter factor BSF_2 based on careful consideration of the following issues: the required level of safety, the number of representative test specimens, how representative the test is, expected fatigue scatter, type of repeated load test, the accuracy of the test loads spectrum, spectrum severity, and the expected service environmental conditions.

ii. In no case should the value of BSF_2 be less than 3.0.

f. *Resolution of test loadings to actual loadings.* The applicant may use a number of different approaches to reduce both the number of load cycles and number of test set-ups required. Due to the modifications to the flight-by-flight loading sequence, the applicant should propose either analytical or empirical approaches to quantify an adjustment to the number of test cycles which represents the difference between the test spectrum and assumed flight-by-flight spectrum. In addition, an adjustment to the number of test

cycles may be justified by raising or lowering the test load levels as long as appropriate data support the applicant's position. Other effects to be considered are different failure locations, different response to fretting conditions, temperature effects, etc. The analytical approach should use well established methods or be supported by test evidence.

SCATTER FACTOR FLOW CHART

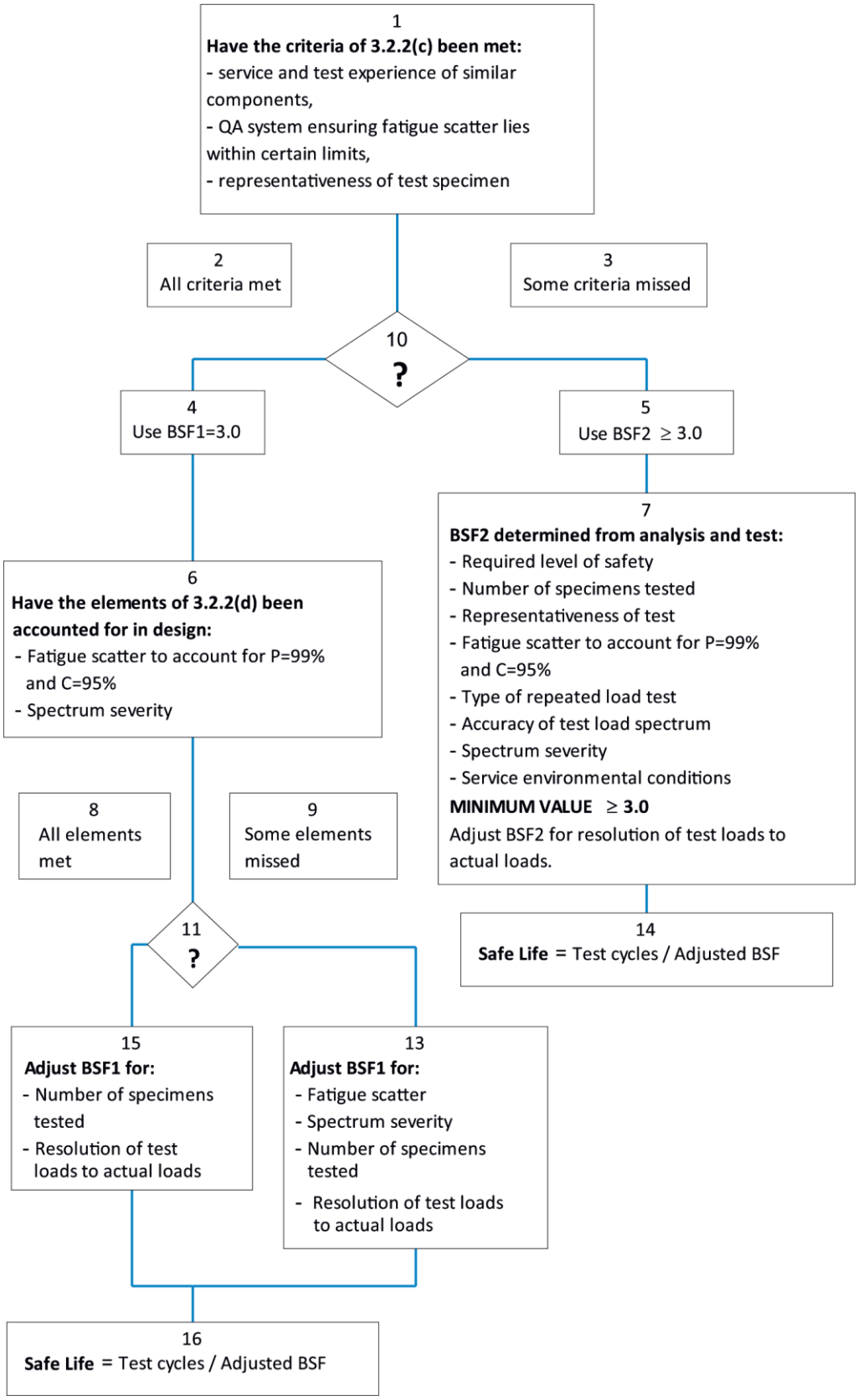

Figure 1

3.3 *Replacement Times.* Replacement times should be established for parts with established safe-lives and should, under CS 25.571(a)(3), be included in the information prepared under CS 25.1529. These replacement times can be extended if additional data indicates an extension is warranted. Important factors which should be considered for such extensions include, but are not limited to, the following:

3.3.1 Comparison of original evaluation with service experience;

3.3.2 *Recorded Load and Stress Data.* Recorded load and stress data entails instrumenting aeroplanes in service to obtain a representative sampling of actual loads and stresses experienced. The data to be measured includes airspeed, altitude, and load factor versus time data; or airspeed, altitude and strain ranges versus time data; or similar data. This data, obtained by instrumenting aeroplanes in service, provides a basis for correlating the estimated loading spectrum with the actual service experience;

3.3.3 *Additional Analyses and Tests.* If test data and analyses based on repeated load tests of additional specimens are obtained, a re-evaluation of the established safe-life can be made;

3.3.4 *Tests of Parts Removed from Service.* Repeated load tests of replaced parts can be utilised to re-evaluate the established safe-life. The tests should closely simulate service loading conditions. Repeated load testing of parts removed from service is especially useful where recorded load data obtained in service are available since the actual loading experienced by the part prior to replacement is known; and

3.3.5 *Repair or Rework of the Structure.* In some cases, repair or rework of the structure can gain further life.

3.4 *Type Design Developments and Changes.* For design developments, or design changes, involving structural configurations similar to those of a design already shown to comply with the applicable provisions of CS 25.571(c), it might be possible to evaluate the variations in critical portions of the structure on a comparative basis. Typical examples would be redesign of the wing structure for increased loads, and the introduction in pressurised cabins of cutouts having different locations or different shapes, or both. This evaluation should involve analysis of the predicted stresses of the redesigned primary structure and correlation of the analysis with the analytical and test results used in showing compliance of the original design with CS 25.571(c).

[Amdt 25/2]

AMC 25.571(b) and (e) Damage-tolerance (fail-safe) Evaluation

ED Decision 2003/2/RM

In the above mentioned conditions the dynamic effects are included except that if significant changes in stiffness and/or geometry follow from the failure or partial failure the response should be further investigated.

LIGHTNING PROTECTION

CS 25.581 Lightning protection

ED Decision 2003/2/RM

(a)The aeroplane must be protected against catastrophic effects from lightning. (See CS 25.899 and AMC 25.581.)

(b) For metallic components, compliance with sub-paragraph (a) of this paragraph may be shown by –

(1) Bonding the components properly to the airframe; or

(2) Designing the components so that a strike will not endanger the aeroplane.

(c) For non-metallic components, compliance with sub-paragraph (a) of this paragraph may be shown by –

(1) Designing the components to minimise the effect of a strike; or

(2) Incorporating acceptable means of diverting the resulting electrical current so as not to endanger the aeroplane.

AMC 25.581 Lightning protection

ED Decision 2003/2/RM

1 *External Metal Parts*

1.1 External metal parts should either be –

a. Electrically bonded to the main earth system by primary bonding paths, or

b. So designed and/or protected that a lightning discharge to the part (e.g. a radio aerial) will cause only local damage which will not endanger the aeroplane or its occupants.

1.2 In addition, where internal linkages are connected to external parts (e.g. control surfaces), the linkages should be bonded to main earth or airframe by primary bonding paths as close to the external part as possible.

1.3 Where a primary conductor provides or supplements the primary bonding path across an operating jack (e.g. on control surfaces or nose droop) it should be of such an impedance and so designed as to limit to a safe value the passage of current through the jack.

1.4 In considering external metal parts, consideration should be given to all flight configurations (e.g. lowering of landing gear and wing-flaps) and also the possibility of damage to the aeroplane electrical system due to surges caused by strikes to protuberances (such as pitot heads) which have connections into the electrical system.

2 *External Non-metallic Parts*

2.1 External non-metallic parts should be so designed and installed that –

a. They are provided with effective lightning diverters which will safely carry the lightning discharges described in EUROCAE document ED-84 (including Amendment N°1 dated 06/09/99) titled: Aircraft Lightning Environment and Related Test Waveforms, or equivalent SAE ARP5412 document.

b. Damage to them by lightning discharges will not endanger the aeroplane or its occupants, or

c. A lightning strike on the insulated portion is improbable because of the shielding afforded by other portions of the aeroplane.

Where lightning diverters are used the surge carrying capacity and mechanical robustness of associated conductors should be at least equal to that required for primary conductors.

2.2 Where unprotected non-metallic parts are fitted externally to the aeroplane in situations where they may be exposed to lightning discharges (e.g. radomes) the risks include the following:

a. The disruption of the materials because of rapid expansion of gases within them (e.g. water vapour),

b. The rapid build up of pressure in the enclosures provided by the parts, resulting in mechanical disruption of the parts themselves or of the structure enclosed by them,

c. Fire caused by the ignition of the materials themselves or of the materials contained within the enclosures, and

d. Holes in the non-metallic part which may present a hazard at high speeds.

2.3 The materials used should not absorb water and should be of high dielectric strength in order to encourage surface flash-over rather than puncture. Laminates made entirely from solid material are preferable to those incorporating laminations of cellular material.

2.4 Those external non-metallic part which is not classified as primary structure should be protected by primary conductors.

2.5 Where damage to an external non-metallic part which is not classified as primary structure may endanger the aeroplane, the part should be protected by adequate lightning diverters.

2.6 Confirmatory tests may be required to check the adequacy of the lightning protection provided (e.g. to confirm the adequacy of the location and size of bonding strips on a large radome.)

SUBPART D – DESIGN AND CONSTRUCTION

GENERAL

CS 25.601 General

ED Decision 2003/2/RM

The aeroplane may not have design features or details that experience has shown to be hazardous or unreliable. The suitability of each questionable design detail and part must be established by tests.

CS 25.603 Materials

ED Decision 2003/2/RM

(For Composite Materials see AMC No. 1 and No. 2 to 25.603.)

The suitability and durability of materials used for parts, the failure of which could adversely affect safety, must –

(a) Be established on the basis of experience or tests;

(b) Conform to approved specifications, that ensure their having the strength and other properties assumed in the design data (See AMC 25.603(b); and

(c) Take into account the effects of environmental conditions, such as temperature and humidity, expected in service.

AMC No. 1 to CS 25.603 Composite Aircraft Structure

ED Decision 2003/2/RM

1 *Purpose*. This AMC sets forth an acceptable means, but not the only means, of showing compliance with the provisions of CS-25 regarding airworthiness type certification requirements for composite aircraft structures, involving fibre-reinforced materials, e.g. carbon (graphite), boron, aramid (Kevlar), and glass-reinforced plastics. Guidance information is also presented on associated quality control and repair aspects.

This AMC material is identical, apart from minor editing, to the structural content of FAA Advisory Circular AC 20.107A, dated 25 April 1984.

The individual CS paragraphs applicable to each AMC paragraph are listed in Table 1 of this AMC.

2 *Definitions*

For the purpose of Subpart D, the following definitions apply:

2.1 *Design values.* Material, structural element, and structural detail properties that have been determined from test data and chosen to assure a high degree of confidence in the integrity of the completed structure (see CS 25.613(b)).

2.2 *Allowables*. Material values that are determined from test data at the laminate or lamina level on a probability basis (e.g. A or B base values).

2.3 *Laminate level design values or allowables*. Established from multi-ply laminate test data and/or from test data at the lamina level and then established at the laminate level by test validated analytical methods.

2.4 *Lamina level material properties*. Established from test data for a single-ply or multi-ply single-direction oriented lamina lay-up.

2.5 *Point design*. An element or detail of a specific design which is not considered generically applicable to other structure for the purpose of substantiation (e.g. lugs and major joints). Such a design element or detail can be qualified by test or by a combination of test and analysis.

2.6 *Environment*. External, non-accidental conditions (excluding mechanical loading), separately or in combination, that can be expected in service and which may affect the structure (e.g. temperature, moisture, UV radiation, and fuel).

2.7 *Degradation*. The alteration of material properties (e.g. strength, modulus, coefficient of expansion) which may result from deviations in manufacturing or from repeated loading and/or environmental exposure.

2.8 *Discrepancy*. A manufacturing anomaly allowed and detected by the planned inspection procedure. They can be created by processing, fabrication or assembly procedures.

2.9 *Flaw*. A manufacturing anomaly created by processing, fabrication or assembly procedures.

2.10 *Damage*. A structural anomaly caused by manufacturing (processing, fabrication, assembly or handling) or service usage. Usually caused by trimming, fastener installation or foreign object contact.

2.11 *Impact damage*. A structural anomaly created by foreign object impact.

2.12 *Coupon*. A small test specimen (e.g. usually a flat laminate) for evaluation of basic lamina or laminate properties or properties of generic structural features (e.g. bonded or mechanically fastened joints).

2.13 *Element*. A generic element of a more complex structural member (e.g. skin, stringers, shear panels, sandwich panels, joints, or splices).

2.14 *Detail*. A non-generic structural element of a more complex member (e.g. specific design configured joints, splices, stringers, stringer runouts, or major access holes).

2.15 *Subcomponent*. A major three-dimensional structure which can provide complete structural representation of a section of the full structure (e.g. stub-box, section of a spar, wing panel, wing rib, body panel, or frames).

2.16 *Component*. A major section of the airframe structure (e.g. wing, body, fin, horizontal stabiliser) which can be tested as a complete unit to qualify the structure.

3 *General*

3.1 This AMC is published to aid the evaluation of certification programmes for composite applications and reflects the current status of composite technology. It is expected that this AMC will be modified periodically to reflect technology advances.

3.2 The extent of testing and /or analysis and the degree of environmental accountability required will differ for each structure depending upon the expected service usage, the material selected, the design margins, the failure criteria, the data base and experience with similar structures, and on other factors affecting a particular structure. It is expected that these factors will be considered when interpreting this AMC for use on a specific application.

4 *Material and Fabrication Development*

4.1 To provide an adequate design data base, environmental effects on the design properties of the material system should be established.

4.2 Environmental design criteria should be developed that identify the most critical environmental exposures, including humidity and temperature, to which the material in the application under evaluation may be exposed. This is not required where existing data demonstrate that no significant environmental effects, including the effects of temperature and moisture, exist for material systems and construction details, within the bounds of environmental exposure being considered. Experimental evidence should be provided to demonstrate that the material design values or allowables are attained with a high degree of confidence in the appropriate critical environmental exposures to be expected in service. The effect of the service environment on static strength, fatigue and stiffness properties should be determined for the material system through tests (e.g. accelerated environmental tests, or from applicable service data). The effects of environmental cycling (i.e. moisture and temperature) should be evaluated. Existing test data may be used where it can be shown directly applicable to the material system.

4.3 The material system design values or allowables should be established on the laminate level by either test of the laminate or by test of the lamina in conjunction with a test-validated analytical method.

4.4 For a specific structural configuration of an individual component (point design), design values may be established which include the effects of appropriate design features (holes, joints, etc.).

4.5 Impact damage is generally accommodated by limiting the design strain level.

5 *Proof of Structure – Static*

5.1 The static strength of the composite design should be demonstrated through a programme of component ultimate load tests in the appropriate environment, unless experience with similar designs, material systems and loadings is available to demonstrate the adequacy of the analysis supported by subcomponent tests, or component tests to agreed lower levels.

5.2 The effects of repeated loading and environmental exposure which may result in material property degradation should be addressed in the static strength evaluation. This can be shown by analysis supported by test evidence, by tests at the coupon, element or subcomponent level, or alternatively by relevant existing data.

5.3 Static strength structural substantiation tests should be conducted on new structure unless the critical load conditions are associated with structure that has been subjected to repeated loading and environmental exposure. In this case either –

a. The static test should be conducted on structure with prior repeated loading and environmental exposure, or

b. Coupon/Element/Subcomponent test data should be provided to assess the possible degradation of static strength after application of repeated loading and environmental exposure, and this degradation accounted for in the static test or in the analysis of the results of the static test of the new structure.

5.4 The component static test may be performed in an ambient atmosphere if the effects of the environment are reliably predicted by subcomponent and/or coupon tests and are accounted for in the static test or in the analysis of the results of the static test.

5.5 The static test articles should be fabricated and assembled in accordance with production specifications and processes so that the test articles are representative of production structure.

5.6 When the material and processing variability of the composite structure is greater than the variability of current metallic structures, the difference should be considered in the static strength substantiation by –

a. Deriving proper allowables or design values for use in the analysis, and the analysis of the results of supporting tests, or

b. Accounting for it in the static test when static proof of structure is accomplished by component test.

5.7 Composite structures that have high static margins of safety may be substantiated by analysis supported by subcomponent, element and/or coupon testing.

5.8 It should be shown that impact damage that can be realistically expected from manufacturing and service, but not more than the established threshold of detectability for the selected inspection procedure, will not reduce the structural strength below ultimate load capability. This can be shown by analysis supported by test evidence, or by tests at the coupon, element or subcomponent level.

6 *Proof of Structure – Fatigue/Damage Tolerance*

6.1 The evaluation of composite structure should be based on the applicable requirements of CS 25.571. The nature and extent of analysis or tests on complete structures and/or portions of the primary structure will depend upon applicable previous fatigue/damage tolerant designs, construction, tests, and service experience on similar structures. In the absence of experience with similar designs, approved structural development tests of components, subcomponents, and elements should be performed. The following considerations are unique to the use of composite material systems and should be observed for the method of substantiation selected by the applicant. When selecting the damage tolerance or safe life approach, attention should be given to geometry, inspectability, good design practice, and the type of damage/degradation of the structure under consideration.

6.2 *Damage Tolerance (Fail-Safe) Evaluation*

6.2.1 Structural details, elements, and subcomponents of critical structural areas should be tested under repeated loads to define the sensitivity of the structure to damage growth. This testing can form the basis for validating a no-growth approach to the damage tolerance requirements. The testing should assess the effect of the environment on the flaw growth characteristics and the no-growth validation. The environment used should be appropriate to the expected service usage. The repeated loading should be representative of anticipated service usage. The repeated load testing should include damage levels (including impact damage) typical of those that may occur during fabrication, assembly, and in service, consistent with the inspection techniques employed. The damage tolerance test articles should be fabricated and assembled in accordance with production specifications and processes so that the test articles are representative of production structure.

6.2.2 The extent of initially detectable damage should be established and be consistent with the inspection techniques employed during manufacture and in service.

Flaw/damage growth data should be obtained by repeated load cycling of intrinsic flaws or mechanically introduced damage. The number of cycles applied to validate a no-growth concept should be statistically significant, and may be determined by load and/or life considerations. The growth or no growth evaluation should be performed by analysis supported by test evidence, or by tests at the coupon, element or subcomponent level.

6.2.3 The extent of damage for residual strength assessments should be established. Residual strength evaluation by component or subcomponent testing or by analysis supported by test evidence should be performed considering that damage. The evaluation should demonstrate that the residual strength of the structure is equal to or greater than the strength required for the specified design loads (considered as ultimate). It should be shown that stiffness properties have not changed beyond acceptable levels. For the no-growth concept, residual strength testing should be performed after repeated load cycling.

6.2.4 An inspection programme should be developed consisting of frequency, extent, and methods of inspection for inclusion in the maintenance plan. Inspection intervals should be established such that the damage will be detected between the time it initially becomes detectable and the time at which the extent of damage reaches the limits for required residual strength capability. For the case of no-growth design concept, inspection intervals should be established as part of the maintenance programme. In selecting such intervals the residual strength level associated with the assumed damage should be considered.

6.2.5 The structure should be able to withstand static loads (considered as ultimate loads) which are reasonably expected during the completion of the flight on which damage resulting from obvious discrete sources occur (i.e. uncontained engine failures, etc.). The extent of damage should be based on a rational assessment of service mission and potential damage relating to each discrete source.

6.2.6 The effects of temperature, humidity, and other environmental factors which may result in material property degradation should be addressed in the damage tolerance evaluation.

6.3 *Fatigue (Safe-Life) Evaluation*. Fatigue substantiation should be accomplished by component fatigue tests or by analysis supported by test evidence, accounting for the effects of the appropriate environment. The test articles should be fabricated and assembled in accordance with production specifications and processes so that the test articles are representative of production structure. Sufficient component, subcomponent, element or coupon tests should be performed to establish the fatigue scatter and the environmental effects. Component, subcomponent and/or element tests may be used to evaluate the fatigue response of structure with impact damage levels typical of those that may occur during fabrication, assembly, and in service, consistent with the inspection procedures employed. The component fatigue test may be performed with an as-manufactured test article if the effects of impact damage are reliably predicted by subcomponent and/or element tests and are accounted for in the fatigue test or in analysis of the results of the fatigue test. It should be demonstrated during the fatigue tests that the stiffness properties have not changed beyond acceptable levels. Replacement lives should be established based on the test results. An appropriate inspection programme should be provided.

7 *Proof of Structure – Flutter*. The effects of repeated loading and environmental exposure on stiffness, mass and damping properties should be considered in the verification of integrity against flutter and other aeroelastic mechanisms. These effects may be determined by analysis supported by test evidence, or by tests of the coupon, element or subcomponent level.

8 *Additional Considerations*

8.1 *Impact Dynamics.* The present approach in airframe design is to assure that occupants have every reasonable chance of escaping serious injury under realistic and survivable impact conditions. Evaluation may be by test or by analysis supported by test evidence. Test evidence includes, but is not limited to, element or subcomponent tests and service experience. Analytical comparison to conventional structure may be used where shown to be applicable.

8.2 *Flammability.* (See appropriate CS requirements in Table 1 of this AMC.)

8.3 *Lightning Protection.* (See appropriate CS requirements in Table 1 of this AMC.)

8.4 *Protection of Structure*. Weathering, abrasion, erosion, ultraviolet radiation, and chemical environment (glycol, hydraulic fluid, fuel, cleaning agents, etc.) may cause deterioration in a composite structure. Suitable protection against and/or consideration of degradation in material properties should be provided for and demonstrated by test.

8.5 *Quality Control.* An overall plan should be established and should involve all relevant disciplines (i.e. engineering, manufacturing and quality control). This quality control plan should be responsive to special engineering requirements that arise in individual parts or areas as a result of potential failure modes, damage tolerance and flaw growth requirements, loadings, inspectability, and local sensitivities to manufacture and assembly.

8.6 *Production Specifications*. Specifications covering material, material processing, and fabrication procedures should be developed to ensure a basis for fabricating reproducible and reliable structure. The discrepancies permitted by the specifications should be substantiated by analysis supported by test evidence, or tests at the coupon, element or subcomponent level.

8.7 *Inspection and Maintenance*. Maintenance manuals developed by manufacturers should include appropriate inspection, maintenance and repair procedures for composite structures.

8.8 *Substantiation of Repair.* When repair procedures are provided in maintenance documentation, it should be demonstrated by analysis and/or test, that methods and techniques of repair will restore the structure to an airworthy condition.

9 *Change of composite material* e also AMC No. 2 to CS 25.603)

9.1 For composite structures a change of material is defined as any of the following situations (even though the structural design remains unchanged).

a. Any change in the basic constituents.

b. The same basic constituents but any change of the impregnation method.

c. The same material, but modification of the processing route.

9.2 For any material change the showing of compliance with CS 25.603 should cover AMC paragraphs 9.2.1 to 9.2.5 in detail.

9.2.1 The nature and extent of the material change should be clearly defined.

9.2.2 Substantiation should be based on a comparability study between the structural performances of the material accepted for type certification and the replacement material. An acceptable approach would be to select from the original substantiating testing those tests that are to be repeated and to justify the omission of others. The extent of testing required will depend on the airworthiness significance of the part and the nature of the material change.

9.2.3 Pass/fail targets should be established as part of the test programme. Any properties that show a significant change in the replacement material should be given special consideration.

9.2.4 The test substantiation selected should interrogate the critical failure modes of the component.

9.2.5 Design allowables should be established to the same level of statistical confidence for the replacement material.

TABLE 1

AMC Paragraphs and related CS texts	
AMC Paragraphs	**CS-25 Paragraphs**
1 Purpose	No relevant CS paragraph
2 Definitions	No relevant CS paragraph
3 General	No relevant CS paragraph
4 Material and Fabrication Development	25.603 25.605 25.613 25.619
5 Proof of Structure – Static	25.305 25.307(a)
6 Proof of Structure – Fatigue/Damage Tolerance	25.571
7 Proof of Structure – Flutter	25.629
8 Additional Considerations	
8.1 Impact Dynamics	25.561 25.601 25.721 25.783(c) and (g) 25.785 25.787(a) and (b) 25.789 25.801 25.809 25.963(d) and (e)
8.2 Flammability	25.609(a) 25.853 25.855 25.859 25.863 25.865 25.867 25.903(c)(2) 25.967(e) 25.1121(c) 25.1181

AMC Paragraphs and related CS texts	
AMC Paragraphs	**CS-25 Paragraphs**
	25.1182 25.1183 25.1185 25.1189(a)(2) 25.1191 25.1193(c), (d) and (e)
8.3 Lightning Protection	25.581 (see AMC 25.899 Paragraph 6) 25.609 25.899 (see AMC 25.899 Paragraph 6) 25.954 (see AMC 25.899 Paragraph 6)
8.4 Protection Structure	25.609 25.1529
8.5 Quality Control	**
8.6 Production Specifications	25.603 25.605

**Guidance material on quality control for composites is under consideration.

AMC No. 2 to CS 25.603 Change of composite material

ED Decision 2003/2/RM

1 PURPOSE

This Acceptable Means of Compliance (AMC) provides guidance for the re-certification of composite structures that, in production, use a different material from that proposed and substantiated at the time of certification of the original structure. Like all advisory material, this document is not, in itself, mandatory and does not constitute a regulation. It is issued to provide guidance and to outline an acceptable method of showing compliance with CS 25.603.

2 SCOPE

The AMC only addresses already certificated composite structures where there is no change to the design and use other than the material change. Components that have a change in geometry or design loading may need to be addressed in a different way.

3 BACKGROUND

The showing of compliance of a new material with CS 25.603, as an alternative to the previously selected material, should normally involve the following steps:

- identify the key material parameters governing performances,
- define the appropriate tests able to measure these parameters,
- define pass/fail criteria for these tests.

The problem with composites is much more complex than with metallic materials, because their performance is much more process dependant. So, until we are capable of accurately identifying the key material parameters governing processability, there will be a need for tests directly interrogating material performance through specimens representative of the actual design details of the composite structure.

Today, showing the suitability of a composite material for its anticipated use, requires a large amount of test data ranging from the coupon level to specimens representative of the most complex features of the structure design. The time needed to perform all these tests and the

associated costs are the reasons why, in most cases, only one material can be proposed for type certification.

Such diversity of testing is required with composites because these materials develop their mechanical properties only when the component is processed (or at least, the resin cured) i.e. that the design of the structure and the associated production processes govern these properties.

To give a more technical interpretation of this specific character of composites, it is necessary to go back to the general principles for dimensioning a structure. Theoretically the strength of a structure could be calculated with analytical models capable, from the knowledge of relevant material properties, of anticipating the mechanical behaviour of complex design details. Unfortunately with composites these analytical models are still insufficiently precise at the level of failure prediction and require a step by step testing verification with more and more complex specimens (the 'pyramid' approach).

Moreover, as the design and the associated manufacturing process can affect the eventual properties, the failure modes along with composite failure prediction models can vary from one material to another. Consequently, they both need to be examined for any material change.

'In house' composite material 'qualification' procedures developed by every manufacturer involve specifications covering:

- physical plus, in some cases, chemical properties,
- mechanical properties measured at the coupon level,
- reproducibility (checked by testing several batches).

But interchangeability for a structural application is not guaranteed between two materials meeting the same manufacture specification (as it could be for materials that are much less process dependant, metallic materials for instance). Under these circumstances, a material that meets the 'qualification' required by a specification does not necessarily produce satisfactory components.

4 DEFINITION OF MATERIAL CHANGE

There is a material change in any of the following situations:

A – A change in one or both of the basic constituents

- resin,
- fibre (including sizing or surface treatment alone).

B – Same basic constituents but any change of the impregnation method

- prepregging process (e.g. solvent bath to hot melt coating),
- tow size (3k, 6k, 12k) with the same fibre areal weight,
- prepregging machine at the same suppliers, – supplier change for a same material (licensed supplier),
- etc.

C – Same material but modification of the processing route (if the modification to the processing route governs eventual composite mechanical properties):

- curing cycle,

– tooling,

– lay-up method,

– environmental parameters of the laying room.

A classification is to be made between a new material which is intended to be a replica of the former one (cases 'B' or 'C') and a 'truly new material' (case 'A'). So, two classes are proposed:

– 'Identical materials' in case of a replica.

– 'Alternative materials' for truly new materials.

Within the 'identical materials' class, a sub-classification can be made between a change of the prepregging machine alone at the supplier and licensed production elsewhere. For the time being, a change to a new fibre produced under a licensed process and reputed to be a replica of the former one, will be dealt with as an 'alternative material'.

Some changes within this class may not interact with structural performances (e.g. prepreg release papers, some bagging materials etc..) and should not be submitted to an agency approval. However the manufacturers (or the supplier) should develop a proper system for screening those changes, with adequate proficiency at all relevant decision levels.

Case 'A' (alternative material) should always be considered as an important change. It is not recommended to try a sub-classification according to the basic constituents being changed, as material behaviour (e.g. sensitivity to stress concentrations) may be governed by interfacial properties which may be affected either by a fibre or a resin change.

5 SUBSTANTIATION METHOD

Only the technical aspects of substantiation are addressed here.

a. Compliance philosophy

Substantiation should be based on a comparability study between the structural performances of the material accepted for type certification, and the second material.

Whatever the modification proposed for a certificated item, the revised margins of safety should remain adequate. Any reduction in the previously demonstrated margin should be investigated in detail.

Identical material (case 'B' and 'C'):

– allowables and design values, whatever the level of investigation; material or design, should remain valid,

– calculation models – including failure prediction should remain the same,

– the technical content of the procurement specification (case 'B') should not be changed.

Alternative material (case 'A'):

– new allowables and design values for all relevant properties should be determined,

– analytical models, including failure prediction models, should be reviewed and, if necessary, substantiated by tests,

– the procurement specification should be evaluated (or a new specification suited to the selected material should be defined) to ensure control quality variations are adequately controlled,

– example changing from 1st to 2nd generation of carbon fibres may improve tensile strength properties by more than 20%: so keeping the same acceptability threshold in the process specification would not allow the detection of quality variations.

b. *Tests to be performed*

The pyramid of tests (building block approach) illustrated in Figure 1 is a consistent way to prepare and present structural substantiation for approval. Each stage of this pyramid refers to an investigation level in terms of specimen category (coupon, element, detail, sub-component and component) as they are defined in the AMC No. 1 to CS 25.603. Coupons and elements are generic specimens which form the data base and can be common to several pyramids. The non-generic specimens (detail, subcomponent, component) are specific to each composite item.

Under these circumstances substantiation to be provided for a changed material cannot be independent from the structural item concerned and a universal list of tests cannot be established. The approach would then consist in selecting, within each pyramid, those tests that are to be duplicated with the second material for the component under examination and the justification of the omission of others.

As a first approach, the investigation level might be restricted to the generic specimens for an identical material, but for an alternative material non-generic ones should be included.

Typically, substantiation should always cover the inherent structural behaviour of composites. The test programme should be established considering the material change proposed and the airworthiness significance of the part. An example list of tests is given in Table 1.

This table applies also for a change in the process route Case C. In some instances (e.g. a cure cycle change) possible consequences can be assessed by tests on generic specimens only. For other changes like those involving tooling (e.g. from a full bag process to thermo-expansive cores) the assessment should include an evaluation of the component itself (sometimes called the 'tool proof test'). In this case, an expanded non destructive inspection procedure should be required for the first items to be produced. This should be supplemented – if deemed necessary – by 'cut up' specimens from a representative component, for physical or mechanical investigations.

c. *Number of batches*

The purpose for testing a number of batches is the demonstration of an acceptable reproducibility of material characteristics. The number of batches required should take into account:

– material classification (identical or alternative),

– the investigation level (non-generic or generic specimen)

– the source of supply,

– the property under investigation.

d. *Pass/Fail Criteria*

Target pass/fail criteria should be established as part of the test programme. As regards strength considerations for instance, a statistical analysis of test data should demonstrate that new allowables derived for the second material provide an adequate margin of

safety. Therefore, provision should be made for a sufficient number of test specimens to allow for such analysis. At the non-generic level, when only one test article is used to assess a structural feature, the pass criteria should be a result acceptable with respect to design ultimate loads. In the cases where test results show lower margins certification documentation will need to be revised.

e. *Other considerations*

For characteristics other than strength (all those listed in AMC No. 1 to CS 25.603, paragraphs 7 and 8) the substantiation should also ensure an equivalent level of safety.

TABLE 1 EXAMPLES OF TESTS THAT MAY NEED TO BE CARRIED OUT

				Number of Batches		
				Alternative Material 'A'	Identical Material 'E'	Identical Material 'C'
Generic tests	On the material	Material Identity	– Physical tests (a real weight, resin content, volatile content). – Thermomechanical tests. – Physico-chemical characterisation of the resin (IR, HPLC, DSC, etc) – Fibre Characterisation etc.	up to 3	1 min	0
Generic tests	On the laminate	Structural Properties	– Physical tests (cured ply thickness, fibre content, porosity etc) – Mechanical tests: – on unidirectional lay-up – on standardised stacking sequences, taking into account: – stress raiser effects in static – temperature/environs sensitivity – bearing effects – tolerance to manufacturing defects, etc.	up to 5	up to 3	1
Non-generic tests		Structural Properties	– Tests on stacking sequences representative of the actual ones on the design – Damage tolerance tests – Detailed tests (eg: stringer runouts, access holes, sandwich panels if relevant etc) To be selected, from engineering judgement, within the pyramid of tests provided for the first material.	1	0	0
Non-generic tests		Processability	Tool proof tests	1	1	1
Non-generic tests		Other Considerations	Impact dynamics, flammability, lightning protection, flutter, protection of structure, substantiation of repairs.	1	0	0

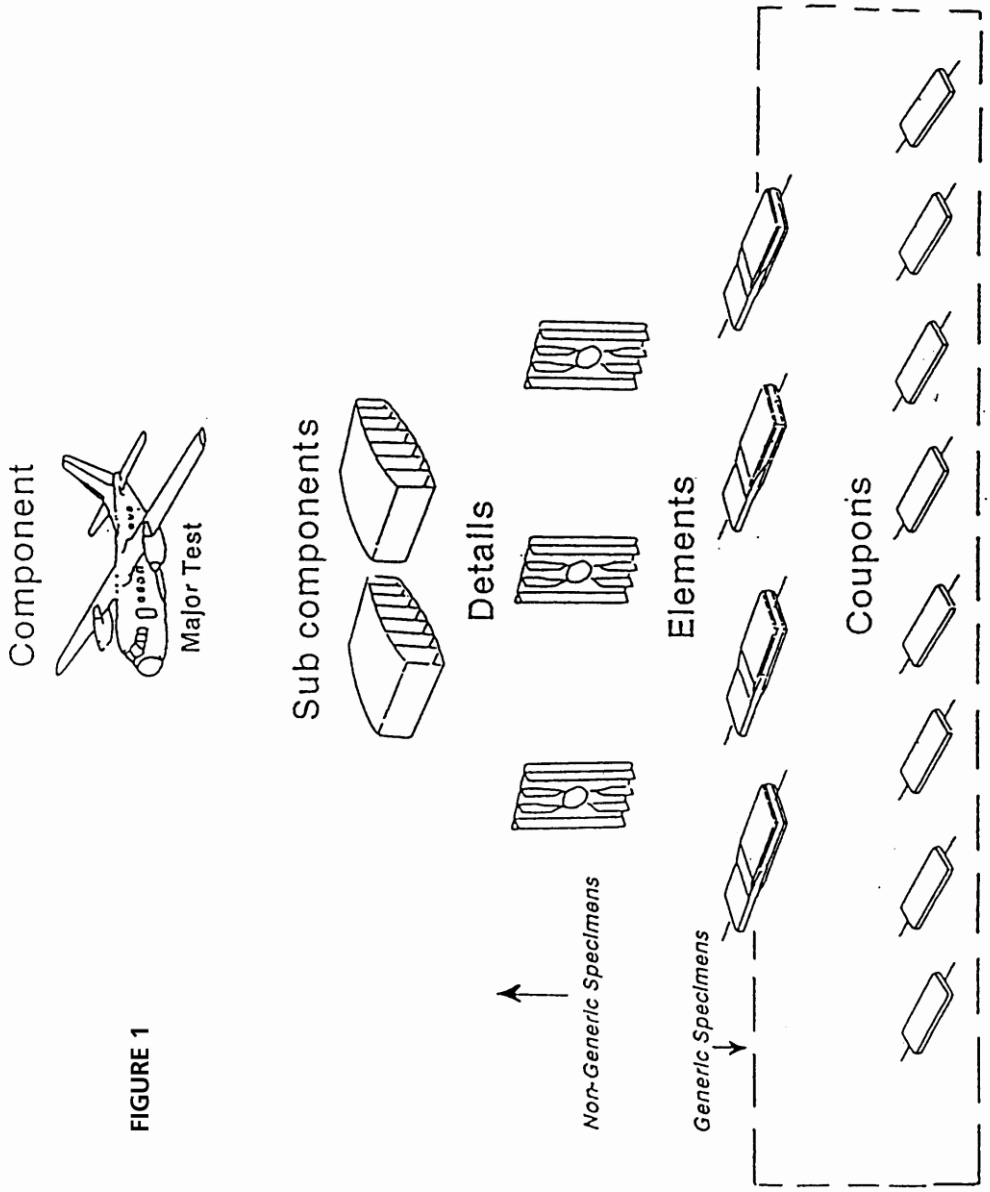

FIGURE 1

AMC 25.603(b) Approved Material Specifications

ED Decision 2003/2/RM

Approved material specifications can be for example industry or military specifications, or European Technical Standard Orders.

CS 25.605 Fabrication methods

ED Decision 2003/2/RM

(a) The methods of fabrication used must produce a consistently sound structure. If a fabrication process (such as gluing, spot welding, or heat treating) requires close control to reach this objective, the process must be performed under an approved process specification.

(b) Each new aircraft fabrication method must be substantiated by a test programme.

CS 25.607 Fasteners

ED Decision 2003/2/RM

(a) Each removable bolt, screw, nut, pin or other removable fastener must incorporate two separate locking devices if –

(1) Its loss could preclude continued flight and landing within the design limitations of the aeroplane using normal pilot skill and strength; or

(2) Its loss could result in reduction in pitch, roll or yaw control capability or response below that required by Subpart B of this CS-25.

(b) The fasteners specified in sub-paragraph (a) of this paragraph and their locking devices may not be adversely affected by the environmental conditions associated with the particular installation.

(c) No self-locking nut may be used on any bolt subject to rotation in operation unless a non-friction locking device is used in addition to the self-locking device.

AMC 25.607 Fasteners

ED Decision 2003/2/RM

FAA Advisory Circular AC 20-71 Dual Locking Devices on Fasteners, date 12-8-70, is accepted by the Agency as providing acceptable means of compliance with CS 25.607.

CS 25.609 Protection of structure

ED Decision 2003/2/RM

Each part of the structure must (see AMC 25.609)-

(a) Be suitably protected against deterioration or loss of strength in service due to any cause, including –

(1) Weathering;

(2) Corrosion; and

(3) Abrasion; and

(b) Have provisions for ventilation and drainage where necessary for protection.

AMC 25.609 Protection of structure

ED Decision 2003/2/RM

The comprehensive and detailed material standards accepted in the member states will be accepted as satisfying the requirement of CS 25.609.

CS 25.611 Accessibility provisions

ED Decision 2003/2/RM

Means must be provided to allow inspection (including inspection of principal structural elements and control systems), replacement of parts normally requiring replacement, adjustment, and lubrication as necessary for continued airworthiness. The inspection means for each item must be practicable for the inspection interval for the item. Non-destructive inspection aids may be used to inspect structural

elements where it is impracticable to provide means for direct visual inspection if it is shown that the inspection is effective and the inspection procedures are specified in the maintenance manual required by CS 25.1529.

CS 25.613 Material strength properties and Material Design Values

ED Decision 2005/006/R

(a) Material strength properties must be based on enough tests of material meeting approved specifications to establish design values on a statistical basis.

(b) Material design values must be chosen to minimise the probability of structural failures due to material variability. Except as provided in sub-paragraphs (e) and (f) of this paragraph, compliance must be shown by selecting material design values which assure material strength with the following probability:

(1) Where applied loads are eventually distributed through a single member within an assembly, the failure of which would result in loss of structural integrity of the component, 99% probability with 95% confidence.

(2) For redundant structure, in which the failure of individual elements would result in applied loads being safely distributed to other load carrying members, 90% probability with 95% confidence.

(c) The effects of environmental conditions, such as temperature and moisture, on material design values used in an essential component or structure must be considered where these effects are significant within the aeroplane operating envelope.

(d) *Reserved*

(e) Greater material design values may be used if a “premium selection” of the material is made in which a specimen of each individual item is tested before use to determine that the actual strength properties of that particular item will equal or exceed those used in design.

(f) Other material design values may be used if approved by the Agency.

[Amdt 25/1]

AMC 25.613 Material Strength Properties and Material Design Values

ED Decision 2005/006/R

1. *Purpose.* This AMC sets forth an acceptable means, but not the only means, of demonstrating compliance with the provisions of CS-25 related to material strength properties and material design values.

2. *Related Certification Specifications.*

CS 25.571 “Damage-tolerance and fatigue evaluation of structure”

CS 25.603 “Materials”

CS 25.613 "Material strength properties and material design values”

3. *General*. CS 25.613 contains the requirements for material strength properties and material design values. Material properties used for fatigue and damage tolerance analysis are addressed by CS 25.571 and AMC 25.571(a).

4. *Material Strength Properties and Material Design Values.*

4.1. *Definitions.*

Material strength properties. Material properties that define the strength related characteristics of any given material. Typical examples of material strength properties are: ultimate and yield values for compression, tension, bearing, shear, etc.

Material design values. Material strength properties that have been established based on the requirements of CS 25.613(b) or other means as defined in this AMC. These values are generally statistically determined based on enough data that when used for design, the probability of structural failure due to material variability will be minimised. Typical values for moduli can be used.

Aeroplane operating envelope. The operating limitations defined for the product under Subpart G of CS-25.

4.2. *Statistically Based Design Values*. Design values required by CS 25.613(b) must be based on sufficient testing to assure a high degree of confidence in the values. In all cases, a statistical analysis of the test data must be performed.

The "A" and "B" properties published in "The Metallic Materials Properties Development

and Standardization (MMPDS) handbook" or ESDU 00932 are acceptable, as are the statistical methods specified in the applicable chapters/sections of these handbooks. Other methods of developing material design values may be acceptable to the Agency.

The test specimens used for material property certification testing should be made from material produced using production processes. Test specimen design, test methods and testing should:

(i) conform to universally accepted standards such as those of the American Society for Testing Materials (ASTM), European Aerospace Series Standards (EN), International Standard Organisation (ISO), or other national standards acceptable to the Agency, or:

(ii) conform to those detailed in the applicable chapters/sections of "The Metallic Materials Properties Development and Standardization (MMPDS) handbook", MIL-HDBK-17, ESDU 00932 or other accepted equivalent material data handbooks, or:

(iii) be accomplished in accordance with an approved test plan which includes definition of test specimens and test methods. This provision would be used, for example, when the material design values are to be based on tests that include effects of specific geometry and design features as well as material.

The Agency may approve the use of other material test data after review of test specimen design, test methods, and test procedures that were used to generate the data.

4.3. *Consideration of Environmental Conditions*. The material strength properties of a number of materials, such as non-metallic composites and adhesives, can be significantly affected by temperature as well as moisture absorption. For these materials, the effects of temperature and moisture should be accounted for in the determination and use of material design values. This determination should include the extremes of conditions encountered within the aeroplane operating envelope. For example, the maximum temperature of a control surface may include effects of direct and reflected solar radiation, convection and radiation from a black runway surface and the maximum ambient temperature. Environmental conditions other than those mentioned may also have significant effects on material design values for some materials and should be considered.

4.4. *Use of Higher Design Values Based on Premium Selection*. Design values greater than those determined under CS 25.613(b) may be used if a premium selection process is employed in accordance with CS 25.613(e). In that process, individual specimens are tested to determine the actual strength properties of each part to be installed on the aircraft to assure that the strength will not be less than that used for design.

If the material is known to be anisotropic then testing should account for this condition.

If premium selection is to be used, the test procedures and acceptance criteria must be specified on the design drawing.

4.5. *Other Material Design Values*. Previously used material design values, with consideration of the source, service experience and application, may be approved by the Agency on a case by case basis (e.g. "S" values of "The Metallic Materials Properties Development and Standardization (MMPDS) handbook" or ESDU 00932).

4.6. Material Specifications and Processes. Materials should be produced using production specifications and processes accepted by the Agency.]

[Amdt 25/1]

CS 25.619 Special factors

ED Decision 2003/2/RM

The factor of safety prescribed in CS 25.303 must be multiplied by the highest pertinent special factor of safety prescribed in CS 25.621 through CS 25.625 for each part of the structure whose strength is –

(a) Uncertain.

(b) Likely to deteriorate in service before normal replacement; or

(c) Subject to appreciable variability because of uncertainties in manufacturing processes or inspection methods.

Where the Agency is not satisfied in a specific case that a special factor is the correct approach to ensuring the necessary integrity of the parts of the structure under service conditions, other appropriate measures must be taken.

CS 25.621 Casting factors

ED Decision 2005/006/R

(a) General. For castings used in structural applications, the factors, tests, and inspections specified in sub-paragraphs (b) through (d) of this paragraph must be applied in addition to those necessary to establish foundry quality control. The inspections must meet accepted specifications. Sub-paragraphs (c) and (d) of this paragraph apply to any structural castings except castings that are pressure tested as parts of hydraulic or other fluid systems and do not support structural loads.

(b) Bearing stresses and surfaces. The casting factors specified in sub-paragraphs (c) and (d) of this paragraph:

(1) Need not exceed 1.25 with respect to bearing stresses regardless of the method of inspection used; and

(2) Need not be used with respect to the bearing surfaces of a part whose bearing factor is larger than the applicable casting factor.

(c) Critical castings. (See AMC 25.621(c)) Each casting whose failure could preclude continued safe flight and landing of the aeroplane or could result in serious injury to occupants is considered a critical casting. Each critical casting must have a factor associated with it for showing compliance with strength and deformation requirements, and must comply with the following criteria associated with that factor:

(1) A casting factor of 1.0 or greater may be used, provided that:

(i) It is demonstrated, in the form of process qualification, proof of product, and process monitoring that, for each casting design and part number, the castings produced by each foundry and process combination have coefficients of variation of the material properties that are equivalent to those of wrought alloy products of similar composition. Process monitoring must include testing of coupons cut from the prolongations of each casting (or each set of castings, if produced from a single pour into a single mould in a runner system) and, on a sampling basis, coupons cut from critical areas of production castings. The acceptance criteria for the process monitoring inspections and tests must be established and included in the process specifications to ensure the properties of the production castings are controlled to within levels used in design.

(ii) Each casting receives:

(A) Inspection of 100 percent of its surface, using visual and liquid penetrant, or equivalent, inspection methods; and

(B) Inspection of structurally significant internal areas and areas where defects are likely to occur, using radiographic, or equivalent, inspection methods.

(iii) One casting undergoes a static test and is shown to meet the strength and deformation requirements of CS 25.305(a) and (b).

(see AMC 25.621(c)(1).)

(2) A casting factor of 1.25 or greater may be used, provided that:

(i) Each casting receives:

(A) Inspection of 100 percent of its surface, using visual and liquid penetrant, or equivalent inspection methods; and

(B) Inspection of structurally significant internal areas and areas where defects are likely to occur, using radiographic, or equivalent, inspection methods.

(ii) Three castings undergo static tests and are shown to meet:

(A) The strength requirements of CS 25.305(b) at an ultimate load corresponding to a casting factor of 1.25; and

(B) The deformation requirements of CS 25.305(a) at a load of 1.15 times the limit load.

(3) A casting factor of 1.50 or greater may be used, provided that:

(i) Each casting receives:

(A) Inspection of 100 percent of its surface, using visual and liquid penetrant, or equivalent, inspection methods; and

(B) Inspection of structurally significant internal areas and areas where defects are likely to occur, using radiographic, or equivalent, inspection methods.

(ii) One casting undergoes a static test and is shown to meet:

(A) The strength requirements of CS 25.305(b) at an ultimate load corresponding to a casting factor of 1.50; and

(B) The deformation requirements of CS 25.305(a) at a load of 1.15 times the limit load.

(d) Non-critical castings. For each casting other than critical castings, as specified in sub-paragraph (c) of this paragraph, the following apply:

(1) A casting factor of 1.0 or greater may be used, provided that compliance is shown with sub-paragraph (c)(1) of this paragraph, or with the following three conditions:

(i) Castings are manufactured to accepted specifications that specify the minimum mechanical properties of the material in the casting and provides for demonstration of these properties by testing of coupons cut from the castings on a sampling basis.

(ii) Each casting receives:

(A) Inspection of 100 percent of its surface, using visual and liquid penetrant, or equivalent, inspection methods; and

(B) Inspection of structurally significant internal areas and areas where defects are likely to occur, using radiographic, or equivalent, inspection methods.

(iii) Three sample castings undergo static tests and are shown to meet the strength and deformation requirements of CS 25.305(a) and (b).

(2) A casting factor of 1.25 or greater may be used, provided that each casting receives:

(i) Inspection of 100 percent of its surface, using visual and liquid penetrant, or equivalent, inspection methods; and

(ii) Inspection of structurally significant internal areas and areas where defects are likely to occur, using radiographic, or equivalent, inspection methods.

(3) A casting factor of 1.5 or greater may be used, provided that each casting receives inspection of 100 percent of its surface using visual and liquid penetrant, or equivalent, inspection methods.

(4) A casting factor of 2.0 or greater may be used, provided that each casting receives inspection of 100 percent of its surface using visual inspection methods.

(5) The number of castings per production batch to be inspected by non-visual methods in accordance with sub-paragraphs (d)(2) and (d)(3) of this paragraph may be reduced from 100% when an accepted quality control procedure is established.

[Amdt 25/1]

AMC 25.621 Casting Factors

ED Decision 2005/006/R

1. *Purpose.*

CS 25.621 is an additional rule/requirement for structural substantiation of cast parts and components. It is used in combination with a number of other paragraphs, and does not replace or negate compliance with any other paragraph of CS-25. The intent of this AMC is to provide general guidance on the use and background of "Casting Factors" as required by CS 25.621.

2. *General Guidance For Use Of Casting Factors.*

2.1 For the analysis or testing required by CS 25.307, the ultimate load level must include limit load multiplied by the required factor required by CS 25.619. The testing required in accordance with CS 25.621 may be used in showing compliance with CS 25.305 and CS 25.307. These factors need not be considered in the fatigue and damage tolerance evaluations required by CS 25.571.

2.2 The inspection methods prescribed by CS 25.621(c) and (d) for all production castings must be such that 100% of the castings are inspected by visual and liquid penetrant techniques, with total coverage of the surface of the casting. With regard to the required radiographic inspection, each production casting must be inspected by this technique or equivalent inspection methods; the inspection may be limited to the structurally significant internal areas and areas where defects are likely to occur.

2.3 With the establishment of consistent production, it is possible to reduce the inspection frequency of the non-visual inspections required by the rule for non-critical castings, with the acceptance of the Agency. This is usually accomplished by an accepted quality control procedure incorporating a sampling plan. (Refer to CS 25.621(d)(5).)

2.4 The static test specimen(s) should be selected on the basis of the foundry quality control inspections, in conjunction with those inspections prescribed in CS 25.621(c) and (d). An attempt should be made to select the worst casting(s) from the first batch produced to the production standard.

2.5 If applicable, the effects on material properties due to weld rework should be addressed. The extent and scope of weld rework should be detailed in the manufacturing specifications as well as on the design drawings.

3. *Background.*

3.1 Regulatory Background. CS 25.621 ("Casting factors") requires classification of structural castings as either "critical" or "non-critical." Depending on classification, the requirement specifies the accomplishment of certain inspections and tests, and the application of special factors of safety for ultimate strength and deformation.

3.2 Application of Special Factors of Safety. The application of factors of safety applied to castings is based on the fact that the casting process can be inconsistent. Casting is a method of forming an object by pouring molten metal into a mould, allowing the material to solidify inside the mould, and removing it when solidification is complete. Castings are subject to variability in mechanical properties due to this casting process, which can result in imperfections, such as voids, within the cast part. Using certain inspection techniques, for example radiographic (X-ray), it is possible to detect such imperfections above a minimum detectable size, but accurate detection depends on the dimensions of the part, the inspection equipment used, and the skill of the inspector.

3.2.1 CS 25.619 ("Special factors") includes a requirement to apply a special factor to the factor of safety prescribed in CS 25.303 for each part of the aeroplane structure whose strength is subject to appreciable variability because of uncertainties in the manufacturing processes or inspection methods. Since the mechanical properties of a casting depend on the casting design, the design values established under CS 25.613 ("Material strength properties and material design values") for one casting might not be applicable to another casting made to the same specification. Thus, casting factors have been necessary for castings produced by normal

techniques and methodologies to ensure the structural integrity of castings in light of these uncertainties.

3.2.2 Another approach is to reduce the uncertainties in the casting manufacturing process by use of a "premium casting process" (discussed in AMC 25.621(c)(1)), which provides a means of using a casting factor of 1.0. CS 25.621 ("Casting factors") does permit the use of a casting factor of 1.0 for critical castings, provided that:

– the manufacturer has established tight controls for the casting process, inspection, and testing; and

– the material strength properties of the casting have no more variability than equivalent wrought alloys.

[Amdt 25/1]

AMC 25.621(c) Critical Castings

ED Decision 2005/006/R

Examples of castings that may be critical are: structural attachment fittings; parts of flight control systems; control surface hinges and balance weight attachments; seat, berth, safety belt and fuel and oil tank supports and attachments; pressurised doors; and cabin pressure valves.

[Amdt 25/1]

AMC 25.621(c)(1) Premium Castings

ED Decision 2005/006/R

1. *Purpose.*

This AMC details an acceptable means, but not the only means, for compliance with CS 25.621 for using a casting factor of 1.0 or greater for "critical" castings used in structural applications. A premium casting process is capable of producing castings with predictable properties, thus allowing a casting factor of 1.0 to be used for these components. Three major steps, required by CS 25.621(c)(1)(i), are essential in characterising a premium casting process:

– qualification of the process,

– proof of the product, and

– monitoring of the process.

2. *Definitions.* For the purposes of this AMC, the following definitions apply:

2.1 Premium Casting Process: a casting process that produces castings characterised by a high quality and reliability

2.2 Prolongation: an integrally cast test bar or test coupon.

2.3 Test Casting: a casting produced specifically for the purpose of qualifying the casting process.

3. *General.* The objective of a premium casting process is to consistently produce castings with high quality and reliability. To this end, the casting process is one that is capable of consistently producing castings that include the following characteristics:

– Good dimensional tolerance

– Minimal distortion
– Good surface finish
– No cracks
– No cold shuts
– No laps
– Minimal shrinkage cavities
– No harmful entrapped oxide films
– Minimal porosity
– A high level of metallurgical cleanness
– Good microstructural characteristics
– Minimal residual internal stress
– Consistent mechanical properties

The majority of these characteristics can be detected, evaluated, and quantified by standard non-destructive testing methods, or from destructive methods on prolongation or casting cut-up tests. However, a number of them cannot. Thus, to ensure an acceptable quality of product, the significant and critical process variables must be identified and adequately controlled.

4. *A Means of Qualification of Casting Process.*

4.1 To prove a premium casting process, it should be submitted to a qualification program that is specific to a foundry/material combination. The qualification program should establish the following:

(a) The capability of the casting process of producing a consistent quality of product for the specific material grade selected for the intended production component.

(b) The mechanical properties for the material produced by the process have population coefficients of variation equivalent to that of wrought products of similar composition (i.e., plate, extrusions, and bar). Usage of the population coefficient of variation from forged products does not apply. In most cases, the coefficients of variation for tensile ultimate strength and tensile yield strength less than or equal to 3.5% and 4.0% respectively is adequate to demonstrate this equivalency of mechanical properties.

(c) The casting process is capable of producing a casting with uniform properties throughout the casting or, if not uniform, with a distribution of material properties that can be predicted to an acceptable level of accuracy.

(d) The (initial) material design data for the specified material are established.

(e) The material and process specifications are clearly defined.

4.2 For each material specification, a series of test castings from a number of melts, using the appropriate production procedures of the foundry, should be manufactured. The test casting produced should undergo a standardised inspection or investigation of non-destructive inspection and cut-up testing, to determine the consistency of the casting process.

4.3 The test casting should be representative of the intended cast product(s) with regard to section thicknesses and complexity, and should expose any limitations of the casting process. In addition, the test casting should be large enough to provide mechanical test specimens from various areas, for tensile and, if applicable, compression, shear, bearing, fatigue, fracture toughness, and crack propagation tests. If the production component complies with these requirements, it may be used to qualify the process. The number of melts sampled should be statistically significant. Typically, at least 10 melts are sampled, with no more than 10 castings produced from each melt. If the material specification requires the components to be heat-treated, this should be done in no fewer than 10 heat treatment batches consisting of castings from more than one melt. Reduction of qualification tests may be considered if the casting process and the casting alloy is already well known for aerospace applications and the relevant data are available.

4.4 Each test casting should receive a non-destructive inspection program which should include as a minimum:

– inspection of 100% of its surface, using visual and liquid penetrant, or equivalent, inspection methods; and

– inspection of structurally significant internal areas and areas where defects are likely to occur, using radiographic methods or equivalent inspection methods. The specific radiographic standard to be employed is to be determined, and the margin by which the test castings exceed the minimum required standard should be recorded.

4.4.1 The program of inspection is intended to:

(a) confirm that the casting process is capable of producing a consistent quality of product, and

(b) verify compliance with the stated objectives of a premium casting process with regard to surface finish, cracks, cold shuts, laps, shrinkage cavities, and porosity, (see paragraph 3), and

(c) ensure that the areas from which the mechanical property test samples were taken were typical of the casting as a whole with respect to porosity and cleanness.

4.4.2 Guidance on non-destructive inspection techniques and methods can be obtained from national and international standards. The standard listing below is not a comprehensive list but is given as an initial reference guide.

ASTM A802 Standard practice for steel castings, surface acceptance standards, visual examination.

ASTM A903 Standard specification for steel castings, surface acceptance standards, magnetic particle and liquid penetrant inspection.

ASTM E155 Standard Reference Radiographs for Inspection of Aluminum and Magnesium Castings.

ASTM E192 Standard Reference Radiographs for Investment Steel Castings of Aerospace Applications.

ASTM E433 Standard reference photographs for liquid penetrant inspection.

ASTM E1030 Standard test method for radiographic examination of metallic castings.

ASTM E1320 Standard Reference Radiographs for Titanium Castings.

ISO 4986 Steel castings - Magnetic particle inspection

ISO 4987 Steel castings - Penetrant inspection

ISO 4993 Steel castings - Radiographic inspection

ISO 9915 Aluminium alloy castings - Radiography testing

ISO 9916 Aluminium alloy and magnesium alloy castings - Liquid penetrant inspection

ISO 10049 Aluminium alloy castings - Visual method for assessing the porosity

ISO 11971 Visual examination of surface quality of steel castings

The test castings must show that the Foundry/Process combination is capable of producing product free of cracks, laps, and cold shuts. Ideally the test castings should be free of detectable shrinkage cavities and porosity. With regard to dimensional tolerance, distortion, and surface finish guidance for acceptance criteria can be gained from the standards cited above. Consideration that these standards are for general quality castings must be given when they are used.

4.5 All test castings should be cut up to a standardised methodology to produce the mechanical test specimens as detailed by paragraph 4.3 above. Principally, the tests are to establish the variability within the cast component, as well as to determine the variability between components from the same melt and from melt to melt. The data gathered also may be used during latter phases to identify deviations from the limits established in the process qualification and product proving programs.

4.6 All the fracture surfaces generated during the qualification program should be inspected at least visually for detrimental defects. Evidence of inclusions, oxide films, porosity or shrinkage cavities would indicate inadequate control of the casting process.

4.7 As part of the cut-up investigation, it is usually necessary to take metallographic samples for cleanness determination and microstructural characterisation.

4.8 When the process has been qualified, it should not be altered without completing comparability studies and necessary testing of differences.

5. *Proof of Product*

5.1 Subsequent to the qualification of the process, the production castings should be subjected to a production-proving program. Such castings should have at least one prolongation; however, large and/or complex castings may require more than one. If a number of castings are produced from a single mould with a single runner system, they may be treated as one single casting. The production-proving program should establish the following:

(a) The design values developed during the process qualification program are valid (e.g., same statistical distribution) for the production casting.

(b) The production castings have the same or less than the level of internal defects as the test castings produced during qualification.

(c) The cast components have a predictable distribution of tensile properties.

(d) The prolongation(s) is representative of the critical area(s) of the casting.

(e) The prolongation(s) consistently reflects the quality process, and material properties of the casting.

5.2 A number of (i.e., at least two) pre-production castings of each part number to be produced should be selected for testing and inspection. All of the selected castings should be non-destructively inspected in accordance with the qualification program.

(a) One of these castings should be used as a dimensional tolerance test article. The other selected casting(s) should be cut up for mechanical property testing and metallographic inspection.

(b) The casting(s) should be cut up to a standardised program to yield a number of tensile test specimens and metallographic samples. There should be sufficient cut-up tensile specimens to cover all critical ("critical" with respect to both the casting process and service loading) areas of the casting.

(c) All prolongations should be machined to give tensile specimens, and subsequently tested.

(d) The production castings should be produced to production procedures identical to those used for these pre-production castings.

5.3 On initial production, a number of castings should undergo a cut-up for mechanical property testing and metallographic inspection, similar to that performed for the pre-production casting(s). The cut-up procedure used should be standardised, although it may differ from that used for the pre-production casting(s). Tensile specimens should be obtained from the most critical areas.

(a) For the first 30 castings produced, at least 1 casting in 10 should undergo this testing program.

(b) The results from the mechanical property tests should be compared with the results obtained from the prolongations to further substantiate the correlation between prolongation(s) and the critical area(s) of the casting.

(c) In addition, if the distribution of mechanical properties derived from these tests is acceptable, when compared to the property values determined in the qualification program, the frequency of testing may be reduced. However, if the comparison is found not to be acceptable, the test program may require extension.

5.4 At no point in the production should the castings contain shrinkage cavities, cracks, cold shuts, laps, porosity, or entrapped oxide film, or have a poor surface finish, exceeding the acceptance level defined in the technical specifications.

6. *Monitoring the Process.*

6.1 For the product quality techniques should be employed to establish the significant/critical foundry process variables that have an impact on the quality of the product. For the product it should be shown that these variables are controlled with positive corrective action throughout production.

6.2 During production, every casting should be non-destructively inspected using the techniques and the acceptance standards employed during the qualification program.

(a) Rejections should be investigated and process corrections made as necessary.

(b) Alternative techniques may be employed if the equivalence in the acceptance levels can be demonstrated.

(c) In addition, tensile tests should be taken from the prolongations on every component produced, and the results should comply with limits developed in the process qualification and product proving programs.

(d) Additionally, as previously mentioned, a periodic casting cut-up inspection should be undertaken, with the inspection schedule as agreed upon during the proof of product program.

(e) Deviations from the limits established in the process qualification and product proving programs should be investigated and corrective action taken.

7. *Modifications to the Casting Design, Material, and Process.*

7.1 Additional testing may be required when alterations are made to the casting geometry, material, significant/critical process variables, process, or production foundry to verify that the alterations have not significantly changed the castings' properties. The verification testing recommended is detailed in Table 1, below:

Modifications					Verification Testing		
Case	Geometry	Material	Process	Foundry	Qualification of Process	Proof of Product	Tests per CS 25.621(c)(1)
1	**yes**	none	none	none	not necessary	yes	yes (b)
2	none	**yes**	none	none	yes (a)	yes	yes (b)
3	**yes**	yes	none	none	yes	yes	yes
4	none	none	**yes**	None	yes (a)	yes	yes (b)
5	none	none	none	**yes**	yes (a)	yes	yes (b)

(a) The program described in paragraph 4. of this AMC to qualify a new material, process, and foundry combination may not be necessary if the following 3 conditions exist for the new combination:

(1) Sufficient data from relevant castings to show that the process is capable of producing a consistent quality of product, and that the quality is comparable to or better than the old combination.

(2) Sufficient data from relevant castings to establish that the mechanical properties of the castings produced from the new combination have a similar or better statistical distribution than the old combination.

(3) Clearly defined material and process specifications.

(b) The casting may be re-qualified by testing partial static test samples (with larger castings, re-qualification could be undertaken by a static test of the casting's critical region only).

[Amdt 25/1]

CS 25.623 Bearing factors

ED Decision 2003/2/RM

(a) Except as provided in sub-paragraph (b) of this paragraph, each part that has clearance (free fit), and that is subject to pounding or vibration, must have a bearing factor large enough to provide for the effects of normal relative motion.

(b) No bearing factor need be used for a part for which any larger special factor is prescribed.

CS 25.625 Fitting factors

ED Decision 2003/2/RM

For each fitting (a part or terminal used to join one structural member to another), the following apply:

(a) For each fitting whose strength is not proven by limit and ultimate load tests in which actual stress conditions are simulated in the fitting and surrounding structures, a fitting factor of at least 1·15 must be applied to each part of –

(1) The fitting;

(2) The means of attachment; and

(3) The bearing on the joined members.

(b) No fitting factor need be used –

(1) For joints made under approved practices and based on comprehensive test data (such as continuous joints in metal plating, welded joints, and scarf joints in wood); or

(2) With respect to any bearing surface for which a larger special factor is used.

(c) For each integral fitting, the part must be treated as a fitting up to the point at which the section properties become typical of the member.

(d) For each seat, berth, safety belt, and harness, the fitting factor specified in CS 25.785(f)(3) applies.

CS 25.629 Aeroelastic stability requirements

ED Decision 2005/006/R

(a) *General*. The aeroelastic stability evaluations required under this paragraph include flutter, divergence, control reversal and any undue loss of stability and control as a result of structural deformation. The aeroelastic evaluation must include whirl modes associated with any propeller or rotating device that contributes significant dynamic forces. Compliance with this paragraph must be shown by analyses, tests, or some combination thereof as found necessary by the Agency (see AMC 25.629).

(b) *Aeroelastic stability envelopes*. The aeroplane must be designed to be free from aeroelastic instability for all configurations and design conditions within the aeroelastic stability envelopes as follows:

(1) For normal conditions without failures, malfunctions, or adverse conditions, all combinations of altitudes and speeds encompassed by the V_D/M_D versus altitude envelope enlarged at all points by an increase of 15 percent in equivalent airspeed at constant Mach number and constant altitude. In addition, a proper margin of stability must exist at all speeds up to V_D/M_D and, there must be no large and rapid reduction in stability as V_D/M_D is approached. The enlarged envelope may be limited to Mach 1.0 when M_D is less than 1.0 at all design altitudes; and

(2) For the conditions described in CS 25.629(d) below, for all approved altitudes, any airspeed up to the greater airspeed defined by:

(i) The V_D/M_D envelope determined by CS 25.335(b); or,

(ii) An altitude-airspeed envelope defined by a 15 percent increase in equivalent airspeed above V_C at constant altitude, from sea level to the altitude of the intersection of 1.15 V_C with the extension of the constant cruise Mach number line,

M_C, then a linear variation in equivalent airspeed to M_C +.05 at the altitude of the lowest V_C/M_C intersection; then, at higher altitudes, up to the maximum flight altitude, the boundary defined by a .05 Mach increase in M_C at constant altitude; and

(iii) Failure conditions of certain systems must be treated in accordance with CS 25.302.

(3) For failure conditions in those systems covered by CS 25.302, the margins defined in Appendix K of CS-25 apply.

(c) *Balance weights*. If balance weights are used, their effectiveness and strength, including supporting structure, must be substantiated.

(d) *Failures, malfunctions, and adverse conditions*. The failures, malfunctions, and adverse conditions which must be considered in showing compliance with this paragraph are:

(1) Any critical fuel loading conditions, not shown to be extremely improbable, which may result from mismanagement of fuel.

(2) Any single failure in any flutter damper or flutter control system.

(3) For aeroplanes not approved for operation in icing conditions, the maximum likely ice accumulation expected as a result of an inadvertent encounter.

(4) Failure of any single element of the structure supporting any engine, independently mounted propeller shaft, large auxiliary power unit, or large externally mounted aerodynamic body (such as an external fuel tank).

(5) For aeroplanes with engines that have propellers or large rotating devices capable of significant dynamic forces, any single failure of the engine structure that would reduce the rigidity of the rotational axis.

(6) The absence of aerodynamic or gyroscopic forces resulting from the most adverse combination of feathered propellers or other rotating devices capable of significant dynamic forces. In addition, the effect of a single feathered propeller or rotating device must be coupled with the failures of sub-paragraphs (d)(4) and (d)(5) of this paragraph.

(7) Any single propeller or rotating device capable of significant dynamic forces rotating at the highest likely overspeed.

(8) Any damage or failure condition, required or selected for investigation by CS 25.571. The single structural failures described in sub-paragraphs (d)(4) and(d)(5) of this paragraph need not be considered in showing compliance with this paragraph if;

(i) The structural element could not fail due to discrete source damage resulting from the conditions described in CS 25.571(e) and CS 25.903(d); and

(ii) A damage tolerance investigation in accordance with CS 25.571(b) shows that the maximum extent of damage assumed for the purpose of residual strength evaluation does not involve complete failure of the structural element.

(9) Any damage, failure or malfunction, considered under CS 25.631, CS 25.671, CS 25.672, and CS 25.1309.

(10) Any other combination of failures, malfunctions, or adverse conditions not shown to be extremely improbable.

(e) *Flight flutter testing*. Full scale flight flutter tests at speeds up to V_{DF}/M_{DF} must be conducted for new type designs and for modifications to a type design unless the modifications have been shown to have an insignificant effect on the aeroelastic stability. These tests must demonstrate that the aeroplane has a proper margin of damping at all speeds up to V_{DF}/M_{DF}, and that there is no large and rapid reduction in damping as V_{DF}/M_{DF} is approached. If a failure, malfunction, or adverse condition is simulated during flight test in showing compliance with sub-paragraph (d) of' this paragraph, the maximum speed investigated need not exceed V_{FC}/M_{FC} if it is shown, by correlation of the flight test data with other test data or analyses, that the aeroplane is free from any aeroelastic instability at all speeds within the altitude-airspeed envelope described in sub-paragraph (b)(2) of this paragraph.

[Amdt 25/1]

AMC 25.629 Aeroelastic stability requirements

ED Decision 2005/006/R

1. *General*.

The general requirement for demonstrating freedom from aeroelastic instability is contained in CS 25.629, which also sets forth specific requirements for the investigation of these aeroelastic phenomena for various aeroplane configurations and flight conditions. Additionally, there are other conditions defined by the CS paragraphs listed below to be investigated for aeroelastic stability to assure safe flight. Many of the conditions contained in this AMC pertain only to the current version of CS-25. Type design changes to aeroplanes certified to an earlier CS-25 change must meet the certification basis established for the modified aeroplane.

CS 25.251 - Vibration and buffeting

CS 25.305 - Strength and deformation

CS 25.335 - Design airspeeds

CS 25.343 - Design fuel and oil loads

CS 25.571 - Damage-tolerance and fatigue evaluation of structure

CS 25.629 - Aeroelastic stability requirements

CS 25.631 - Bird strike damage

CS 25.671 - General (Control systems)

CS 25.672 - Stability augmentation and automatic and power operated systems

CS 25.1309 - Equipment, systems and installations

CS 25.1329 - Automatic pilot system

CS 25.1419 - Ice protection

2. *Aeroelastic Stability Envelope*

2.1. For nominal conditions without failures, malfunctions, or adverse conditions, freedom from aeroelastic instability is required to be shown for all combinations of airspeed and altitude encompassed by the design dive speed (V_D) and design dive Mach number (M_D) versus altitude envelope enlarged at all points by an increase of 15 percent in equivalent airspeed at both constant Mach number and constant altitude. Figure 1A represents a typical design envelope expanded to the required aeroelastic stability envelope. Note

that some required Mach number and airspeed combinations correspond to altitudes below standard sea level.

2.2. The aeroelastic stability envelope may be limited to a maximum Mach number of 1.0 when M_D is less than 1.0 and there is no large and rapid reduction in damping as MD is approached.

2.3. Some configurations and conditions that are required to be investigated by CS 25.629 and other CS-25 regulations consist of failures, malfunctions or adverse conditions Aeroelastic stability investigations of these conditions need to be carried out only within the design airspeed versus altitude envelope defined by:

(i) the V_D/M_D envelope determined by CS 25.335(b); or,

(ii) an altitude-airspeed envelope defined by a 15 percent increase in equivalent airspeed above V_C at constant altitude, from sea level up to the altitude of the intersection of 1.15 V_C with the extension of the constant cruise Mach number line, M_C, then a linear variation in equivalent airspeed to M_C + .05 at the altitude of the lowest V_C/M_C intersection; then at higher altitudes, up to the maximum flight altitude, the boundary defined by a .05 Mach increase in M_C at constant altitude.

Figure 1B shows the minimum aeroelastic stability envelope for fail-safe conditions, which is a composite of the highest speed at each altitude from either the V_D envelope or the constructed altitude-airspeed envelope based on the defined V_C and M_C.

Fail-safe design speeds, other than the ones defined above, may be used for certain system failure conditions when specifically authorised by other rules or special conditions prescribed in the certification basis of the aeroplane.

FIGURE 1A. MINIMUM REQUIRED AEROELASTIC STABILITY MARGIN

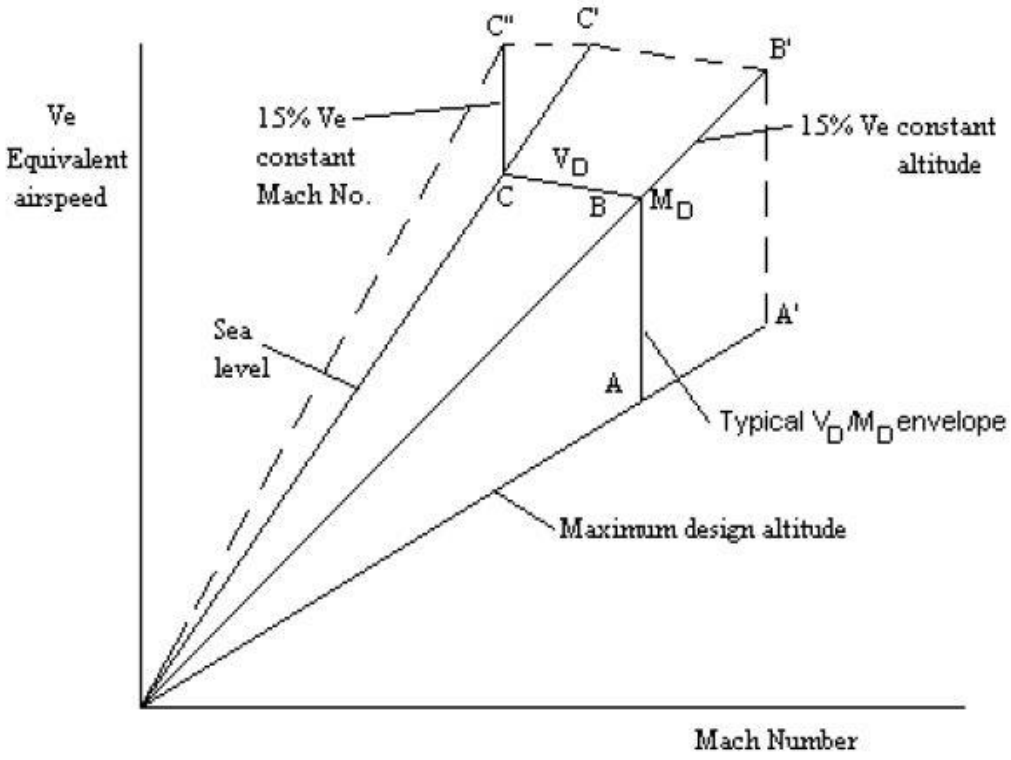

FIGURE 1B MINIMUM FAIL-SAFE CLEARANCE ENVELOPE

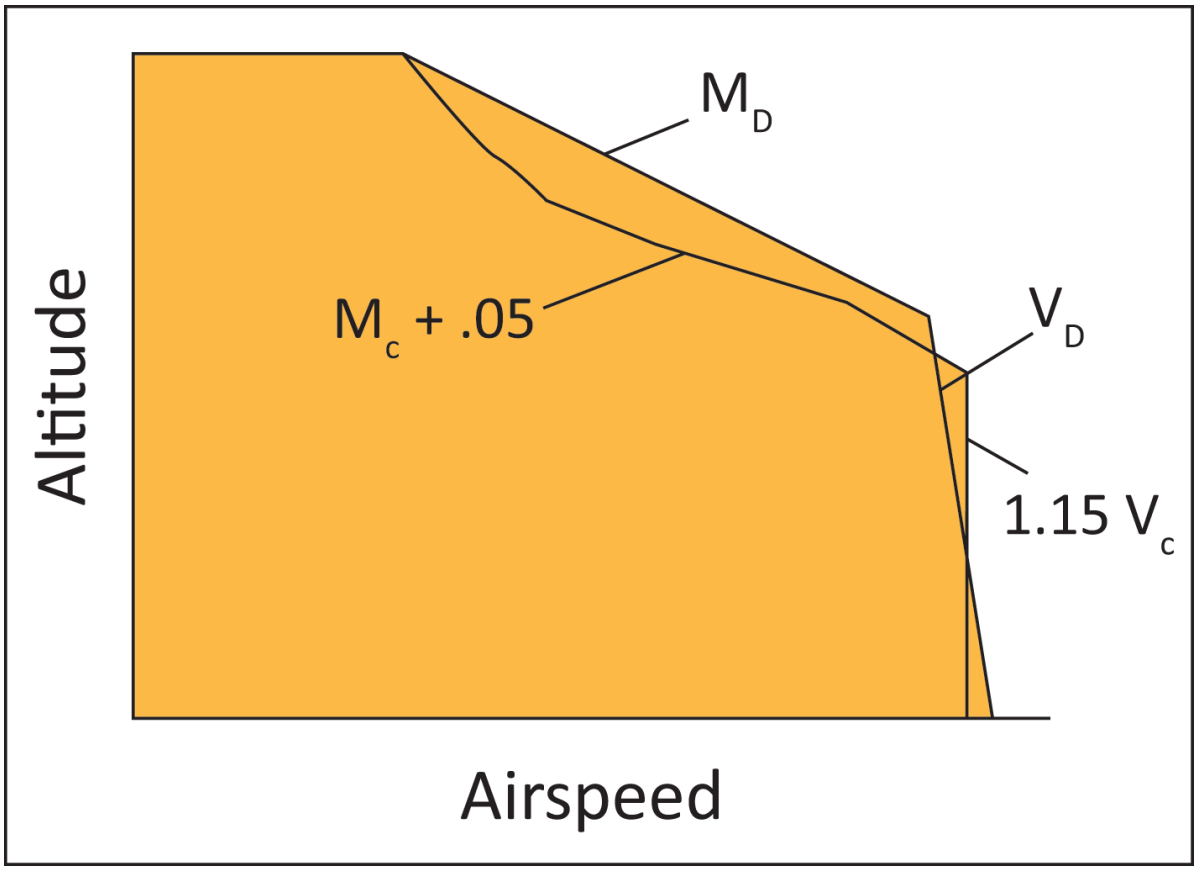

3. *Configurations and Conditions*. The following paragraphs provide a summary of the configurations and conditions to be investigated in demonstrating compliance with CS-25. Specific design configurations may warrant additional considerations not discussed in this AMC.

3.1. *Nominal Configurations and Conditions*. Nominal configurations and conditions of the aeroplane are those that are likely to exist in normal operation. Freedom from aeroelastic instability should be shown throughout the expanded clearance envelope described in paragraph 2.1 above for:

3.1.1. The range of fuel and payload combinations, including zero fuel in the wing, for which certification is requested.

3.1.2. Configurations with any likely ice mass accumulations on unprotected surfaces for aeroplanes approved for operation in icing conditions.

3.1.3. All normal combinations of autopilot, yaw damper, or other automatic flight control systems.

3.1.4. All possible engine settings and combinations of settings from idle power to maximum available thrust including the conditions of one engine stopped and windmilling, in order to address the influence of gyroscopic loads and thrust on aeroelastic stability.

3.2. *Failures, Malfunctions, and Adverse Conditions*. The following conditions should be investigated for aeroelastic instability within the fail-safe envelope defined in paragraph 2.3 above.

3.2.1. Any critical fuel loading conditions, not shown to be extremely improbable, which may result from mismanagement of fuel.

3.2.2. Any single failure in any flutter control system.

3.2.3. For aeroplanes not approved for operation in icing conditions, any likely ice accumulation expected as a result of an inadvertent encounter. For aeroplanes approved for operation in icing conditions, any likely ice accumulation expected as the result of any single failure in the de-icing system, or any combination of failures not shown to be extremely improbable.

3.2.4. Failure of any single element of the structure supporting any engine, independently mounted propeller shaft, large auxiliary power unit, or large externally mounted aerodynamic body (such as an external fuel tank).

3.2.5. For aeroplanes with engines that have propellers or large rotating devices capable of significant dynamic forces, any single failure of the engine structure that would reduce the rigidity of the rotational axis.

3.2.6. The absence of aerodynamic or gyroscopic forces resulting from the most adverse combination of feathered propellers or other rotating devices capable of significant dynamic forces. In addition, the effect of a single feathered propeller or rotating device must be coupled with the failures of paragraphs 3.2.4 and 3.2.5 above.

3.2.7. Any single propeller or rotating device capable of significant dynamic forces rotating at the highest likely overspeed.

3.2.8. Any damage or failure condition, required or selected for investigation by CS 25.571. The single structural failures described in paragraphs 3.2.4 and 3.2.5 above need not be considered in showing compliance with this paragraph if;

(A) The structural element could not fail due to discrete source damage resulting from the conditions described in CS 25.571(e) and CS 25.903(d); and

(B) A damage tolerance investigation in accordance with CS 25.571(b) shows that the maximum extent of damage assumed for the purpose of residual strength evaluation does not involve complete failure of the structural element.

3.2.9. Any damage, failure or malfunction, considered under CS 25.631, CS 25.671, CS 25.672, and CS 25.1309. This includes the condition of two or more engines stopped or wind milling for the design range of fuel and payload combinations, including zero fuel.

3.2.10. Any other combination of failures, malfunctions, or adverse conditions not shown to be extremely improbable.

4. *Detail Design Requirements.*

4.1. Main surfaces, such as wings and stabilisers, should be designed to meet the aeroelastic stability criteria for nominal conditions and should be investigated for meeting fail-safe criteria by considering stiffness changes due to discrete damage or by reasonable parametric variations of design values.

4.2. Control surfaces, including tabs, should be investigated for nominal conditions and for failure modes that include single structural failures (such as actuator disconnects, hinge

failures, or, in the case of aerodynamic balance panels, failed seals), single and dual hydraulic system failures and any other combination of failures not shown to be extremely improbable. Where other structural components contribute to the aeroelastic stability of the system, failures of those components should be considered for possible adverse effects.

4.3. Where aeroelastic stability relies on control system stiffness and/or damping, additional conditions should be considered. The actuation system should continuously provide, at least, the minimum stiffness or damping required for showing aeroelastic stability without regard to probability of occurrence for:

(i) more than one engine stopped or wind milling,

(ii) any discrete single failure resulting in a change of the structural modes of vibration (for example; a disconnect or failure of a mechanical element, or a structural failure of a hydraulic element, such as a hydraulic line, an actuator, a spool housing or a valve);

(iii) any damage or failure conditions considered under CS 25.571, CS 25.631 and CS 25.671.

The actuation system minimum requirements should also be continuously met after any combination of failures not shown to be extremely improbable (occurrence less than 10^{-9} per flight hour). However, certain combinations of failures, such as dual electric or dual hydraulic system failures, or any single failure in combination with any probable electric or hydraulic system failure (CS 25.671), are not normally considered extremely improbable regardless of probability calculations. The reliability assessment should be part of the substantiation documentation. In practice, meeting the above conditions may involve design concepts such as the use of check valves and accumulators, computerised pre-flight system checks and shortened inspection intervals to protect against undetected failures.

4.4 Consideration of free play may be incorporated as a variation in stiffness to assure adequate limits are established for wear of components such as control surface actuators, hinge bearings, and engine mounts in order to maintain aeroelastic stability margins.

4.5. If balance weights are used on control surfaces, their effectiveness and strength, including that of their support structure, should be substantiated.

4.6 The automatic flight control system should not interact with the airframe to produce an aeroelastic instability. When analyses indicate possible adverse coupling, tests should be performed to determine the dynamic characteristics of actuation systems such as servo-boost, fully powered servo-control systems, closed-loop aeroplane flight control systems, stability augmentation systems, and other related powered-control systems.

5. Compliance. Demonstration of compliance with aeroelastic stability requirements for an aircraft configuration may be shown by analyses, tests, or some combination thereof. In most instances, analyses are required to determine aeroelastic stability margins for normal operations, as well as for possible failure conditions. Wind tunnel flutter model tests, where applicable, may be used to supplement flutter analyses. Ground testing may be used to collect stiffness or modal data for the aircraft or components. Flight testing may be used to demonstrate compliance of the aircraft design throughout the design speed envelope.

5.1. Analytical Investigations. Analyses should normally be used to investigate the aeroelastic stability of the aircraft throughout its design flight envelope and as expanded by the required speed margins. Analyses are used to evaluate aeroelastic stability sensitive parameters such as aerodynamic coefficients, stiffness and mass distributions, control surface balance requirements, fuel management schedules, engine/store locations, and control system characteristics. The sensitivity of most critical parameters may be determined analytically by varying the parameters from nominal. These investigations are an effective way to account for the operating conditions and possible failure modes which may have an effect on aeroelastic stability margins, and to account for uncertainties in the values of parameters and expected variations due to in-service wear or failure conditions.

5.1.1. Analytical Modelling. The following paragraphs discuss acceptable, but not the only, methods and forms of modelling aircraft configurations and/or components for purposes of aeroelastic stability analysis. The types of investigations generally encountered in the course of aircraft aeroelastic stability substantiation are also discussed. The basic elements to be modelled in aeroelastic stability analyses are the elastic, inertial, and aerodynamic characteristics of the system. The degree of complexity required in the modelling, and the degree to which other characteristics need to be included in the modelling, depend upon the system complexity.

5.1.1.1. Structural Modelling. Most forms of structural modelling can be classified into two main categories: (1) modelling using a lumped mass beam, and (2) finite element modelling. Regardless of the approach taken for structural modelling, a minimum acceptable level of sophistication, consistent with configuration complexity, is necessary to satisfactorily represent the critical modes of deformation of the primary structure and control surfaces. The model should reflect the support structure for the attachment of control surface actuators, flutter dampers, and any other elements for which stiffness is important in prevention of aeroelastic instability. Wing-pylon mounted engines are often significant to aeroelastic stability and warrant particular attention in the modelling of the pylon, and pylon-engine and pylon-wing interfaces. The model should include the effects of cut-outs, doors, and other structural features which may tend to affect the resulting structural effectiveness. Reduced stiffness should be considered in the modelling of aircraft structural components which may exhibit some change in stiffness under limit design flight conditions. Structural models include mass distributions as well as representations of stiffness and possibly damping characteristics. Results from the models should be compared to test data, such as that obtained from ground vibration tests, in order to determine the accuracy of the model and its applicability to the aeroelastic stability investigation.

5.1.1.2. Aerodynamic Modelling.

(a) Aerodynamic modelling for aeroelastic stability requires the use of unsteady, two-dimensional strip or three-dimensional panel theory methods for incompressible or compressible flow. The choice of the appropriate technique depends on the complexity of the dynamic structural motion of the surfaces under investigation and the flight speed envelope of the aircraft. Aerodynamic modelling should be

supported by tests or previous experience with applications to similar configurations.

(b) Main and control surface aerodynamic data are commonly adjusted by weighting factors in the aeroelastic stability solutions. The weighting factors for steady flow (k=0) are usually obtained by comparing wind tunnel test results with theoretical data. Special attention should be given to control surface aerodynamics because viscous and other effects may require more extensive adjustments to theoretical coefficients. Main surface aerodynamic loading due to control surface deflection should be considered.

5.1.2. Types of Analyses.

5.1.2.1. Oscillatory (flutter) and non-oscillatory (divergence and control reversal) aeroelastic instabilities should be analysed to show compliance with CS 25.629.

5.1.2.2. The flutter analysis methods most extensively used involve modal analysis with unsteady aerodynamic forces derived from various two- and three-dimensional theories. These methods are generally for linear systems. Analyses involving control system characteristics should include equations describing system control laws in addition to the equations describing the structural modes.

5.1.2.3. Aeroplane lifting surface divergence analyses should include all appropriate rigid body mode degrees-of-freedom since divergence may occur for a structural mode or the short period mode.

5.1.2.4. Loss of control effectiveness (control reversal) due to the effects of elastic deformations should be investigated. Analyses should include the inertial, elastic, and aerodynamic forces resulting from a control surface deflection.

5.1.3 Damping Requirements.

5.1.3.1. There is no intent in this AMC to define a flight test level of acceptable minimum damping.

5.1.3.2. Flutter analyses results are usually presented graphically in the form of frequency versus velocity (V-f, Figure 2) and damping versus velocity (V-g, Figures 3 and 4) curves for each root of the flutter solution.

5.1.3.3. Figure 3 details one common method for showing compliance with the requirement for a proper margin of damping. It is based on the assumption that the structural damping available is 0.03 (1.5% critical viscous damping) and is the same for all modes as depicted by the V-g curves shown in Figure 3. No significant mode, such as curves (2) or (4), should cross the g=0 line below V_D or the g=0.03 line below 1.15 V_D. An exception may be a mode exhibiting damping characteristics similar to curve (1) in Figure 3, which is not critical for flutter. A divergence mode, as illustrated by curve (3) where the frequency approaches zero, should have a divergence velocity not less than 1.15 V_D.

5.1.3.4. Figure 4 shows another common method of presenting the flutter analysis results and defining the structural damping requirements. An appropriate amount of structural damping for each mode is entered into the analysis

prior to the flutter solution. The amount of structural damping used should be supported by measurements taken during full scale tests. This results in modes offset from the g=0 line at zero airspeed and, in some cases, flutter solutions different from those obtained with no structural damping. The similarity in the curves of Figures 3 and 4 are only for simplifying this example. The minimum acceptable damping line applied to the analytical results as shown in Figure 4 corresponds to 0.03 or the modal damping available at zero airspeed for the particular mode of interest, whichever is less, but in no case less than 0.02. No significant mode should cross this line below V_D or the g=0 line below 1.15 V_D.

5.1.3.5. For analysis of failures, malfunctions or adverse conditions being investigated, the minimum acceptable damping level obtained analytically would be determined by use of either method above, but with a substitution of V_C for V_D and the fail-safe envelope speed at the analysis altitude as determined by paragraph 2.3 above.

FIGURE 2: FREQUENCY VERSUS VELOCITY

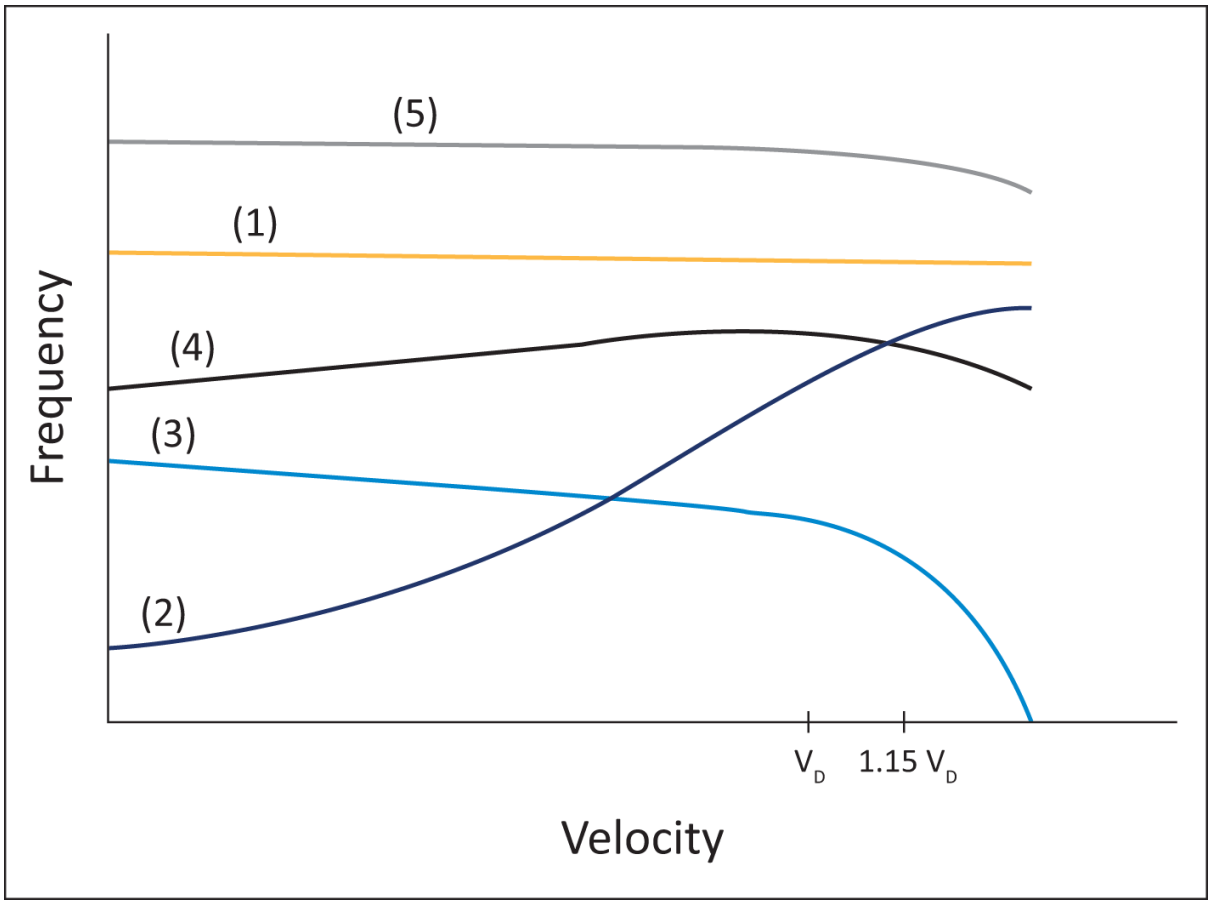

FIGURE 3: DAMPING VERSUS VELOCITY - Method 1

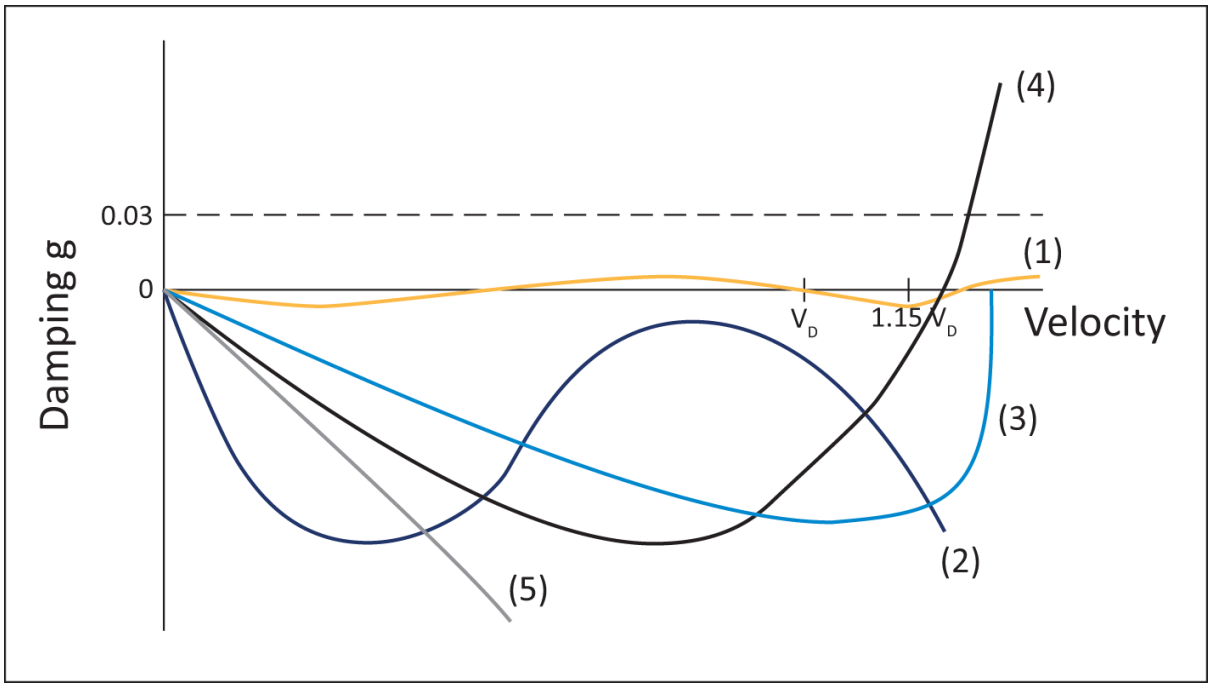

FIGURE 4: DAMPING VERSUS VELOCITY - Method 2

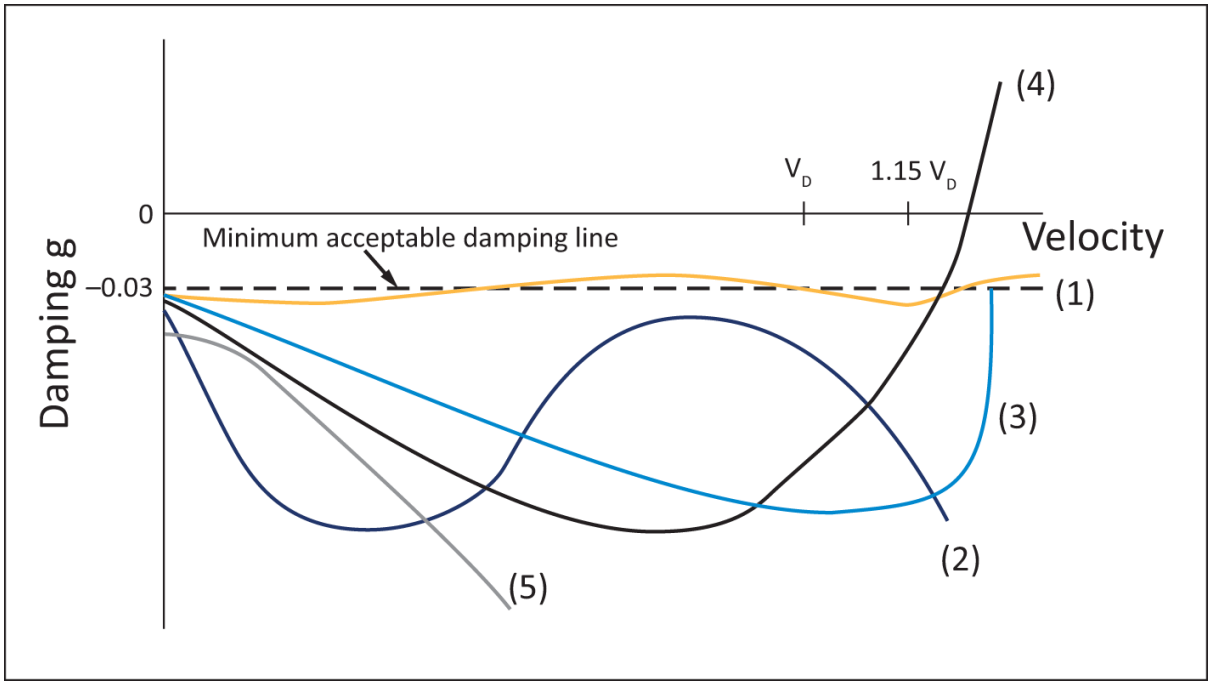

5.1.4. Analysis Considerations. Airframe aeroelastic stability analyses may be used to verify the design with respect to the structural stiffness, mass, fuel (including in-flight fuel management), automatic flight control system characteristics, and altitude and Mach number variations within the design flight envelope. The complete aeroplane should be considered as composed of lifting surfaces and bodies, including all primary control surfaces which can interact with the lifting

surfaces to affect flutter stability. Control surface flutter can occur in any speed regime and has historically been the most common form of flutter. Lifting surface flutter is more likely to occur at high dynamic pressure and at high subsonic and transonic Mach numbers. Analyses are necessary to establish the mass balance and/or stiffness and redundancy requirements for the control surfaces and supporting structure and to determine the basic surface flutter trends. The analyses may be used to determine the sensitivity of the nominal aircraft design to aerodynamic, mass, and stiffness variations. Sources of stiffness variation may include the effects of skin buckling at limit load factor, air entrapment in hydraulic actuators, expected levels of in-service free play, and control system components which may include elements with non-linear stiffness. Mass variations include the effects of fuel density and distribution, control surface repairs and painting, and water and ice accumulation.

5.1.4.1. Control Surfaces. Control surface aeroelastic stability analyses should include control surface rotation, tab rotation (if applicable), significant modes of the aeroplane, control surface torsional degrees-of-freedom, and control surface bending (if applicable). Analyses of aeroplanes with tabs should include tab rotation that is both independent and related to the parent control surface. Control surface rotation frequencies should be varied about nominal values as appropriate for the condition. The control surfaces should be analysed as completely free in rotation unless it can be shown that this condition is extremely improbable. All conditions between stick-free and stick-fixed should be investigated. Free play effects should be incorporated to account for any influence of in-service wear on flutter margins. The aerodynamic coefficients of the control surface and tab used in the aeroelastic stability analysis should be adjusted to match experimental values at zero frequency. Once the analysis has been conducted with the nominal, experimentally adjusted values of hinge moment coefficients, the analysis should be conducted with parametric variations of these coefficients and other parameters subject to variability. If aeroelastic stability margins are found to be sensitive to these parameters, then additional verification in the form of model or flight tests may be required.

5.1.4.2. Mass Balance.

(a) The magnitude and spanwise location of control surface balance weights may be evaluated by analysis and/or wind tunnel flutter model tests. If the control surface torsional degrees of freedom are not included in the analysis, then adequate separation must be maintained between the frequency of the control surface first torsion mode and the flutter mode.

(b) Control surface unbalance tolerances should be specified to provide for repair and painting. The accumulation of water, ice, and/or dirt in or near the trailing edge of a control surface should be avoided. Free play between the balance weight, the support arm, and the control surface must not be allowed. Control surface mass properties (weight and static unbalance) should be confirmed by measurement before ground vibration testing.

(c) The balance weights and their supporting structure should be substantiated for the extreme load factors expected throughout the

design flight envelope. If the absence of a rational investigation, the following limit accelerations, applied through the balance weight centre of gravity should be used.

- 100g normal to the plane of the surface
- 30g parallel to the hinge line
- 30g in the plane of the surface and perpendicular to the hinge line

5.1.4.3. Passive Flutter Dampers. Control surface passive flutter dampers may be used to prevent flutter in the event of failure of some element of the control surface actuation system or to prevent control surface buzz. Flutter analyses and/or flutter model wind tunnel tests may be used to verify adequate damping. Damper support structure flexibility should be included in the determination of adequacy of damping at the flutter frequencies. Any single damper failure should be considered. Combinations of multiple damper failures should be examined when not shown to be extremely improbable. The combined free play of the damper and supporting elements between the control surface and fixed surfaces should be considered. Provisions for in-service checks of damper integrity should be considered. Refer to paragraph 4.3 above for conditions to consider where a control surface actuator is switched to the role of an active or passive damping element of the flight control system.

5.1.4.4. Intersecting Lifting Surfaces. Intersecting lifting surface aeroelastic stability characteristics are more difficult to predict accurately than the characteristics of planar surfaces such as wings. This is due to difficulties both in correctly predicting vibration modal characteristics and in assessing those aerodynamic effects which may be of second order importance on planar surfaces, but are significant for intersecting surfaces. Proper representation of modal deflections and unsteady aerodynamic coupling terms between surfaces is essential in assessing the aeroelastic stability characteristics. The in-plane forces and motions of one or the other of the intersecting surfaces may have a strong effect on aeroelastic stability; therefore, the analysis should include the effects of steady flight forces and elastic deformations on the in-plane effects.

5.1.4.5. Ice Accumulation. Aeroelastic stability analysis should use the mass distributions derived from any likely ice accumulations. The ice accumulation determination can take account of the ability to detect the ice and the time required to leave the icing condition. The analyses need not consider the aerodynamic effects of ice shapes.

5.1.4.6. Whirl Flutter.

(a) The evaluation of the aeroelastic stability should include investigations of any significant elastic, inertial, and aerodynamic forces, including those associated with rotations and displacements in the plane of any turbofan or propeller, including propeller or fan blade aerodynamics, powerplant flexibilities, powerplant mounting characteristics, and gyroscopic coupling.

(b) Failure conditions are usually significant for whirl instabilities. Engine mount, engine gear box support, or shaft failures which result in a node line shift for propeller hub pitching or yawing motion are especially significant.

(c) A wind tunnel test with a component flutter model, representing the engine/propeller system and its support system along with correlative vibration and flutter analyses of the flutter model, may be used to demonstrate adequate stability of the nominal design and failed conditions.

5.1.4.7. Automatic Control Systems. Aeroelastic stability analyses of the basic configuration should include simulation of any control system for which interaction may exist between the sensing elements and the structural modes. Where structural/control system feedback is a potential problem the effects of servo-actuator characteristics and the effects of local deformation of the servo mount on the feedback sensor output should be included in the analysis. The effect of control system failures on the aeroplane aeroelastic stability characteristics should be investigated. Failures which significantly affect the system gain and/or phase and are not shown to be extremely improbable should be analysed.

5.2. Testing. The aeroelastic stability certification test programme may consist of ground tests, flutter model tests, and flight flutter tests. Ground tests may be used for assessment of component stiffness and for determining the vibration modal characteristics of aircraft components and the complete airframe. Flutter model testing may be used to establish flutter trends and validate aeroelastic stability boundaries in areas where unsteady aerodynamic calculations require confirmation. Full scale flight flutter testing provides final verification of aeroelastic stability. The results of any of these tests may be used to provide substantiation data, to verify and improve analytical modelling procedures and data, and to identify potential or previously undefined problem areas.

5.2.1. Structural Component Tests. Stiffness tests or ground vibration tests of structural components are desirable to confirm analytically predicted characteristics and are necessary where stiffness calculations cannot accurately predict these characteristics. Components should be mounted so that the mounting characteristics are well defined or readily measurable.

5.2.2. Control System Component Tests. When reliance is placed on stiffness or damping to prevent aeroelastic instability, the following control system tests should be conducted. If the tests are performed off the aeroplane the test fixtures should reflect local attachment flexibility.

(i) Actuators for primary flight control surfaces and flutter dampers should be tested with their supporting structure. These tests are to determine the actuator/support structure stiffness for nominal design and failure conditions considered in the fail-safe analysis.

(ii) Flutter damper tests should be conducted to verify the impedance of damper and support structure. Satisfactory installed damper effectiveness at the potential flutter frequencies should, however, be assured. The results of these tests can be used to determine a suitable, in-service maintenance

schedule and replacement life of the damper. The effects of allowable in-service free play should be measured.

5.2.3. Ground vibration Tests.

5.2.3.1. Ground vibration tests (GVT) or modal response tests are normally conducted on the complete conforming aeroplane. A GVT may be used to check the mathematical structural model. Alternatively, the use of measured modal data alone in aeroelastic stability analyses, instead of analytical modal data modified to match test data, may be acceptable provided the accuracy and completeness of the measured modal data is established. Whenever structural modifications or inertia changes are made to a previously certified design or a GVT validated model of the basic aeroplane, a GVT may not be necessary if these changes are shown not to affect the aeroelastic stability characteristics.

5.2.3.2. The aeroplane is best supported such that the suspended aeroplane rigid body modes are effectively uncoupled from the elastic modes of the aeroplane. Alternatively, a suspension method may be used that couples with the elastic aeroplane provided that the suspension can be analytically de-coupled from the aeroplane structure in the vibration analysis. The former suspension criterion is preferred for all ground vibration tests and is necessary in the absence of vibration analysis.

5.2.3.3. The excitation method needs to have sufficient force output and frequency range to adequately excite all significant resonant modes. The effective mass and stiffness of the exciter and attachment hardware should not distort modal response. More than one exciter or exciter location may be necessary to insure that all significant modes are identified. Multiple exciter input may be necessary on structures with significant internal damping to avoid low response levels and phase shifts at points on the structure distant from the point of excitation. Excitation may be sinusoidal, random, pseudo-random, transient, or other short duration, non stationary means. For small surfaces the effect of test sensor mass on response frequency should be taken into consideration when analysing the test results.

5.2.3.4. The minimum modal response measurement should consist of acceleration (or velocity) measurements and relative phasing at a sufficient number of points on the aeroplane structure to accurately describe the response or mode shapes of all significant structural modes. In addition, the structural damping of each mode should be determined.

5.2.4. Flutter Model Tests.

5.2.4.1. Dynamically similar flutter models may be tested in the wind tunnel to augment the flutter analysis. Flutter model testing can substantiate the flutter margins directly or indirectly by validating analysis data or methods. Some aspects of flutter analysis may require more extensive validation than others, for example control surface aerodynamics, T-tails and other configurations with aerodynamic interaction and compressibility effects. Flutter testing may additionally be useful to test configurations that are impractical to verify in flight test., such as fail-safe conditions or extensive store configurations. In any such testing, the mounting of the model and the

associated analysis should be appropriate and consistent with the study being performed.

5.2.4.2. Direct substantiation of the flutter margin (clearance testing) implies a high degree of dynamic similitude. Such a test may be used to augment an analysis and show a configuration flutter free throughout the expanded design envelope. All the physical parameters which have been determined to be significant for flutter response should be appropriately scaled. These will include elastic and inertia properties, geometric properties and dynamic pressure. If transonic effects are important, the Mach number should be maintained.

5.2.4.3. Validation of analysis methods is another appropriate use of wind tunnel flutter testing. When the validity of a method is uncertain, correlation of wind tunnel flutter testing results with a corresponding analysis may increase confidence in the use of the analytical tool for certification analysis. A methods validation test should simulate conditions, scaling and geometry appropriate for the intended use of the analytical method.

5.2.4.4. Trend studies are an important use of wind tunnel flutter testing. Parametric studies can be used to establish trends for control system balance and stiffness, fuel and payload variations, structural compliances and configuration variations. The set of physical parameters requiring similitude may not be as extensive to study parametric trends as is required for clearance testing. For example, an exact match of the Mach number may not be required to track the effects of payload variations on a transonic aeroplane.

5.2.5. Flight Flutter Tests.

5.2.5.1. Full scale flight flutter testing of an aeroplane configuration to V_{DF}/M_{DF} is a necessary part of the flutter substantiation. An exception may be made when aerodynamic, mass, or stiffness changes to a certified aeroplane are minor, and analysis or ground tests show a negligible effect on flutter or vibration characteristics. If a failure, malfunction, or adverse condition is simulated during a flight test, the maximum speed investigated need not exceed V_{FC}/M_{FC} if it is shown, by correlation of the flight test data with other test data or analyses, that the requirements of CS 25.629(b)(2) are met.

5.2.5.2. Aeroplane configurations and control system configurations should be selected for flight test based on analyses and, when available, model test results. Sufficient test conditions should be performed to demonstrate aeroelastic stability throughout the entire flight envelope for the selected configurations.

5.2.5.3. Flight flutter testing requires excitation sufficient to excite the modes shown by analysis to be the most likely to couple for flutter. Excitation methods may include control surface motions or internal moving mass or external aerodynamic exciters or flight turbulence. The method of excitation must be appropriate for the modal response frequency being investigated. The effect of the excitation system itself on the aeroplane flutter characteristics should be determined prior to flight testing.

5.2.5.4. Measurement of the response at selected locations on the structure should be made in order to determine the response amplitude, damping and frequency in the critical modes at each test airspeed. It is desirable to monitor the response amplitude, frequency and damping change as V_{DF}/M_{DF} is approached. In demonstrating that there is no large and rapid damping reduction as V_{DF}/M_{DF} is approached, an endeavour should be made to identify a clear trend of damping versus speed. If this is not possible, then sufficient test points should be undertaken to achieve a satisfactory level of confidence that there is no evidence of an adverse trend.

5.2.5.5. An evaluation of phenomena not presently amenable to analyses, such as shock effects, buffet response levels, vibration levels, and control surface buzz, should also be made during flight testing.

[Amdt 25/1]

CS 25.631 Bird strike damage

ED Decision 2003/2/RM

The aeroplane must be designed to assure capability of continued safe flight and landing of the aeroplane after impact with a 4 lb bird when the velocity of the aeroplane (relative to the bird along the aeroplane's flight path) is equal to V_C at sealevel or 0·85 V_C at 2438 m (8000 ft), whichever is the more critical. Compliance may be shown by analysis only when based on tests carried out on sufficiently representative structures of similar design. (See AMC 25.631.)

AMC 25.631 Bird strike damage

ED Decision 2003/2/RM

Consideration should be given in the early stages of the design to the installation of items in essential services, such as control system components, and items which, if damaged, could cause a hazard, such as electrical equipment. As far as practicable, such items should not be installed immediately behind areas liable to be struck by birds.

CONTROL SURFACES

CS 25.651 Proof of strength

ED Decision 2003/2/RM

(a) Limit load tests of control surfaces are required. These tests must include the horn or fitting to which the control system is attached.

(b) Compliance with the special factors requirements of CS 25.619 to 25.625 and 25.657 for control surface hinges must be shown by analysis or individual load tests.

CS 25.655 Installation

ED Decision 2003/2/RM

(a) Movable tail surfaces must be installed so that there is no interference between any surfaces when one is held in its extreme position and the others are operated through their full angular movement.

(b) If an adjustable stabiliser is used, it must have stops that will limit its range of travel to the maximum for which the aeroplane is shown to meet the trim requirements of CS 25.161.

CS 25.657 Hinges

ED Decision 2003/2/RM

(a) For control surface hinges, including ball, roller, and self-lubricated bearing hinges, the approved rating of the bearing may not be exceeded. For non-standard bearing hinge configurations, the rating must be established on the basis of experience or tests and, in the absence of a rational investigation, a factor of safety of not less than 6·67 must be used with respect to the ultimate bearing strength of the softest material used as a bearing.

(b) Hinges must have enough strength and rigidity for loads parallel to the hinge line.

CONTROL SYSTEMS

CS 25.671 General

ED Decision 2003/2/RM

(a) Each control and control system must operate with the ease, smoothness, and positiveness appropriate to its function. (See AMC 25.671(a).)

(b) Each element of each flight control system must be designed, or distinctively and permanently marked, to minimise the probability of incorrect assembly that could result in the malfunctioning of the system. (See AMC 25.671(b).)

(c) The aeroplane must be shown by analysis, test, or both, to be capable of continued safe flight and landing after any of the following failures or jamming in the flight control system and surfaces (including trim, lift, drag, and feel systems) within the normal flight envelope, without requiring exceptional piloting skill or strength. Probable malfunctions must have only minor effects on control system operation and must be capable of being readily counteracted by the pilot.

(1) Any single failure not shown to be extremely improbable, excluding jamming, (for example, disconnection or failure of mechanical elements, or structural failure of hydraulic components, such as actuators, control spool housing, and valves). (See AMC 25.671(c)(1).)

(2) Any combination of failures not shown to be extremely improbable, excluding jamming (for example, dual electrical or hydraulic system failures, or any single failure in combination with any probable hydraulic or electrical failure).

(3) Any jam in a control position normally encountered during take-off, climb, cruise, normal turns, descent and landing unless the jam is shown to be extremely improbable, or can be alleviated. A runaway of a flight control to an adverse position and jam must be accounted for if such runaway and subsequent jamming is not extremely improbable.

(d) The aeroplane must be designed so that it is controllable if all engines fail. Compliance with this requirement may be shown by analysis where that method has been shown to be reliable.

AMC 25.671(a) Control Systems – General

ED Decision 2003/2/RM

Control systems for essential services should be so designed that when a movement to one position has been selected, a different position can be selected without waiting for the completion of the initially selected movement, and the system should arrive at the finally selected position without further attention. The movements which follow and the time taken by the system to allow the required sequence of selection should not be such as to adversely affect the airworthiness of the aeroplane.

AMC 25.671(b) Control Systems – General

ED Decision 2003/2/RM

For control systems which, if incorrectly assembled, would hazard the aeroplane, the design should be such that at all reasonably possible break-down points it is mechanically impossible to assemble elements of the system to give –

a. An out-of-phase action,

b. An assembly which would reverse the sense of the control, and

c. Interconnection of the controls between two systems where this is not intended.

Only in exceptional circumstances should distinctive marking of control systems be used to comply with the above.

AMC 25.671(c)(1) Control Systems – General

ED Decision 2003/2/RM

To comply with CS 25.671(c)(1) there should normally be –

a. An alternative means of controlling the aeroplane in case of a single failure, or

b. An alternative load path.

However, where a single component is used on the basis that its failure is extremely improbable, it should comply with CS 25.571(a) and (b).

CS 25.672 Stability augmentation and automatic and power-operated systems

ED Decision 2003/2/RM

If the functioning of stability augmentation or other automatic or power-operated systems is necessary to show compliance with the flight characteristics requirements of this CS-25, such systems must comply with CS 25.671 and the following:

(a) A warning, which is clearly distinguishable to the pilot under expected flight conditions without requiring his attention, must be provided for any failure in the stability augmentation system or in any other automatic or power-operated system, which could result in an unsafe condition if the pilot were not aware of the failure. Warning systems must not activate the control systems.

(b) The design of the stability augmentation system or of any other automatic or power-operated system must permit initial counteraction of failures of the type specified in CS 25.671(c) without requiring exceptional pilot skill or strength, by either the deactivation of the system, or a failed portion thereof, or by overriding the failure by movement of the flight controls in the normal sense.

(c) It must be shown that after any single failure of the stability augmentation system or any other automatic or power-operated system –

(1) The aeroplane is safely controllable when the failure or malfunction occurs at any speed or altitude within the approved operating limitations that is critical for the type of failure being considered. (See AMC 25.672(c)(1))

(2) The controllability and manoeuvrability requirements of this CS-25 are met within a practical operational flight envelope (for example, speed, altitude, normal acceleration, and aeroplane configurations) which is described in the Aeroplane Flight Manual; and

(3) The trim, stability, and stall characteristics are not impaired below a level needed to permit continued safe flight and landing.

AMC 25.672(c)(1) Stability augmentation and automatic and power-operated systems

ED Decision 2003/2/RM

The severity of the flying quality requirement should be related to the probability of the occurrence in a progressive manner such that probable occurrences have not more than minor effects and improbable occurrences have not more than major effects.

CS 25.675 Stops

ED Decision 2003/2/RM

(a) Each control system must have stops that positively limit the range of motion of each movable aerodynamic surface controlled by the system.

(b) Each stop must be located so that wear, slackness, or take-up adjustments will not adversely affect the control characteristics of the aeroplane because of a change in the range of surface travel.

(c) Each stop must be able to withstand any loads corresponding to the design conditions for the control system.

CS 25.677 Trim systems

ED Decision 2003/2/RM

(a) Trim controls must be designed to prevent inadvertent or abrupt operation and to operate in the plane, and the sense of motion, of the aeroplane.

(b) There must be means adjacent to the trim control to indicate the direction of the control movement relative to the aeroplane motion. In addition, there must be clearly visible means to indicate the position of the trim device with respect to the range of adjustment. The indicator must be clearly marked with the range within which it has been demonstrated that take-off is safe for all centre of gravity positions approved for take-off.

(c) Trim control systems must be designed to prevent creeping in flight. Trim tab controls must be irreversible unless the tab is appropriately balanced and shown to be free from flutter.

(d) If an irreversible tab control system is used, the part from the tab to the attachment of the irreversible unit to the aeroplane structure must consist of a rigid connection.

CS 25.679 Control system gust locks

ED Decision 2003/2/RM

(a) There must be a device to prevent damage to the control surfaces (including tabs), and to the control system, from gusts striking the aeroplane while it is on the ground. If the device, when engaged, prevents normal operation of the control surfaces by the pilot, it must –

(1) Automatically disengage when the pilot operates the primary flight controls in a normal manner; or

(2) Limit the operation of the aeroplane so that the pilot receives unmistakable warning at the start of take-off. (See AMC 25.679(a)(2).)

(b) The device must have means to preclude the possibility of it becoming inadvertently engaged in flight. (See AMC 25.679(b).)

AMC 25.679(a)(2) Control system gust locks

ED Decision 2003/2/RM

If the device required by CS 25.679(a) limits the operation of the aeroplane by restricting the movement of a control that must be set before take-off (e.g. throttle control levers), this device should be such that it will perform the function for which it is designed even when subject to likely maladjustment or wear, so that –

a. The movement of that control is restricted as long as the device is engaged; and

b. The movement of that control is unrestricted when the device is disengaged.

AMC 25.679(b) Control system gust locks

ED Decision 2003/2/RM

For the purposes of meeting the design intent of this paragraph, flight means the time from the moment the aircraft first moves under its own power for the purpose of flight until the moment it comes to rest after landing.

CS 25.681 Limit load static tests

ED Decision 2003/2/RM

(a) Compliance with the limit load requirements of this CS-25 must be shown by tests in which –

(1) The direction of the test loads produces the most severe loading in the control system; and

(2) Each fitting, pulley, and bracket used in attaching the system to the main structure is included.

(b) Compliance must be shown (by analyses or individual load tests) with the special factor requirements for control system joints subject to angular motion.

CS 25.683 Operation tests

ED Decision 2003/2/RM

(a) It must be shown by operation tests that when portions of the control system subject to pilot effort loads are loaded to 80% of the limit load specified for the system and the powered portions of the control system are loaded to the maximum load expected in normal operation, the system is free from –

(1) Jamming;

(2) Excessive friction; and

(3) Excessive deflection.

(b) It must be shown by analysis and, where necessary, by tests that in the presence of deflections of the aeroplane structure due to the separate application of pitch, roll and yaw limit manoeuvre loads, the control system, when loaded to obtain these limit loads and operated within its operational range of deflections can be exercised about all control axes and remain free from-

(1) Jamming;

(2) Excessive friction;

(3) Disconnection, and

(4) Any form of permanent damage.

(c) It must be shown that under vibration loads in the normal flight and ground operating conditions, no hazard can result from interference or contact with adjacent elements.

CS 25.685 Control system details

ED Decision 2003/2/RM

(a) Each detail of each control system must be designed and installed to prevent jamming, chafing, and interference from cargo, passengers, loose objects or the freezing of moisture. (See AMC 25.685(a).)

(b) There must be means in the cockpit to prevent the entry of foreign objects into places where they would jam the system.

(c) There must be means to prevent the slapping of cables or tubes against other parts.

(d) CS 25.689 and CS 25.693 apply to cable systems and joints.

AMC 25.685(a) Control system details

ED Decision 2003/2/RM

In assessing compliance with CS 25.685(a) account should be taken of the jamming of control circuits by the accumulation of water in or on any part which is likely to freeze. Particular attention should be paid to the following:

a. The points where controls emerge from pressurised compartments.

b. Components in parts of the aeroplane which could be contaminated by the water systems of the aeroplane in normal or fault conditions; if necessary such components should be shielded.

c. Components in parts of the aeroplane where rain and/or condensed water vapour can drip or accumulate.

d. Components inside which water vapour can condense and water can accumulate.

CS 25.689 Cable systems

ED Decision 2003/2/RM

(a) Each cable, cable fitting, turnbuckle, splice, and pulley must be approved. In addition –

(1) No cable smaller than 3.2 mm (0·125 inch) diameter may be used in the aileron, elevator, or rudder systems; and

(2) Each cable system must be designed so that there will be no hazardous change in cable tension throughout the range of travel under operating conditions and temperature variations.

(b) Each kind and size of pulley must correspond to the cable with which it is used. Pulleys and sprockets must have closely fitted guards to prevent the cables and chains from being displaced or fouled. Each pulley must lie in the plane passing through the cable so that the cable does not rub against the pulley flange.

(c) Fairleads must be installed so that they do not cause a change in cable direction of more than three degrees.

(d) Clevis pins subject to load or motion and retained only by cotter pins may not be used in the control system.

(e) Turnbuckles must be attached to parts having angular motion in a manner that will positively prevent binding throughout the range of travel.

(f) There must be provisions for visual inspection of fairleads, pulleys, terminals, and turnbuckles.

CS 25.693 Joints

ED Decision 2003/2/RM

Control system joints (in push-pull systems) that are subject to angular motion, except those in ball and roller bearing systems must have a special factor of safety of not less than 3·33 with respect to the ultimate bearing strength of the softest material used as a bearing. This factor may be reduced to 2·0 for joints in cable control systems. For ball or roller bearings, the approved ratings, may not be exceeded.

CS 25.697 Lift and drag devices, controls

ED Decision 2003/2/RM

(a) Each lift device control must be designed so that the pilots can place the device in any takeoff, en-route, approach, or landing position established under CS 25.101(d). Lift and drag devices must maintain the selected positions, except for movement produced by an automatic positioning or load limiting device, without further attention by the pilots.

(b) Each lift and drag device control must be designed and located to make inadvertent operation improbable. Lift and drag devices intended for ground operation only must have means to prevent the inadvertent operation of their controls in flight if that operation could be hazardous.

(c) The rate of motion of the surfaces in response to the operation of the control and the characteristics of the automatic positioning or load limiting device must give satisfactory flight and performance characteristics under steady or changing conditions of airspeed, engine power, and aeroplane attitude.

(d) The lift device control must be designed to retract the surfaces from the fully extended position, during steady flight at maximum continuous engine power at any speed below V_F + 17 km/hr (9·0 knots).

CS 25.699 Lift and drag device indicator

ED Decision 2003/2/RM

(a) There must be means to indicate to the pilots the position of each lift or drag device having a separate control in the cockpit to adjust its position. In addition, an indication of unsymmetrical operation or other malfunction in the lift or drag device systems must be provided when such indication is necessary to enable the pilots to prevent or counteract an unsafe flight or ground condition, considering the effects on flight characteristics and performance.

(b) There must be means to indicate to the pilots the take-off, en-route, approach, and landing lift device positions.

(c) If any extension of the lift and drag device beyond the landing position is possible, the control must be clearly marked to identify this range of extension.

CS 25.701 Flap and slat interconnection

ED Decision 2003/2/RM

(a) Unless the aeroplane has safe flight characteristics with the flaps or slats retracted on one side and extended on the other, the motion of flaps or slats on opposite sides of the plane of symmetry must be synchronised by a mechanical interconnection or approved equivalent means.

(b) If a wing-flap or slat interconnection or equivalent means is used, it must be designed to account for the applicable unsymmetrical loads, including those resulting from flight with the engines on one side of the plane of symmetry inoperative and the remaining engines at take-off power.

(c) For aeroplanes with flaps or slats that are not subjected to slipstream conditions, the structure must be designed for the loads imposed when the wing-flaps or slats on one side are carrying the most severe load occurring in the prescribed symmetrical conditions and those on the other side are carrying not more than 80% of that load.

(d) The interconnection must be designed for the loads resulting when interconnected flap or slat surfaces on one side of the plane of symmetry are jammed and immovable while the surfaces on the other side are free to move and the full power of the surface actuating system is applied. (See AMC 25.701(d).)

AMC 25.701(d) Flap and slat interconnection

ED Decision 2003/2/RM

FAA Advisory Circular AC 25-14 High Lift and Drag Devices, dated 5-4-88, is accepted by the Agency as providing acceptable means of compliance with CS 25.701(d).

CS 25.703 Take-off warning system

ED Decision 2003/2/RM

A take-off warning system must be installed and must meet the following requirements:

(a) The system must provide to the pilots an aural warning that is automatically activated during the initial portion of the take-off roll if the aeroplane is in a configuration, including any of the following that would not allow a safe take-off:

(1) The wing-flaps or leading edge devices are not within the approved range of take-off positions.

(2) Wing spoilers (except lateral control spoilers meeting the requirements of CS 25.671), speed brakes, or longitudinal trim devices are in a position that would not allow a safe take-off.

(3) The parking brake is unreleased.

(b) The aural warning required by sub-paragraph (a) of this paragraph must continue until –

(1) The take-off configuration is changed to allow a safe take-off;

(2) Action is taken by the pilot to terminate the take-off roll;

(3) The aeroplane is rotated for take-off; or

(4) The warning is manually silenced by the pilot. The means to silence the warning must not be readily available to the flight crew such that it could be operated instinctively, inadvertently, or by habitual reflexive action. Before each take-off, the warning must be

rearmed automatically, or manually if the absence of automatic rearming is clear and unmistakable.

(c) The means used to activate the system must function properly for all authorised take-off power settings and procedures, and throughout the ranges of take-off weights, altitudes, and temperatures for which certification is requested.

AMC 25.703 Take-off Configuration Warning Systems

ED Decision 2006/005/R

1. *PURPOSE*. This AMC provides guidance for the certification of take-off configuration warning systems installed in large aeroplanes. Like all AMC material, this AMC is not mandatory and does not constitute a requirement. It is issued to provide guidance and to outline a method of compliance with the rules.

2. *RELATED CERTIFICATION SPECIFICATIONS*.

CS 25.703, 25.1301, 25.1309, 25.1322, 25.1357, 25.1431, and 25.1529.

3. *RELATED MATERIAL*.

a. Federal Aviation Administration and EASA Documents.

(1) Advisory Circular 25.1309-( ), System Design and Analysis and AC 25-11 Transport Category Airplane Electronic Display Systems. Advisory circulars can be obtained from the U.S. Department of Transportation, M-443.2, Subsequent Distribution Unit, Washington, D.C. 20590.

(2) Report DOT/FAA/RD-81/38, II, Aircraft Alerting Systems Standardization Study, Volume II, Aircraft Alerting Systems Design Guidelines. This document can be obtained from the National Technical Information Service, Springfield, Virginia 22161.

(3) FAA report, Review of Take-off Configuration Warning Systems on Large Jet Transports, dated April 29, 1988. This document can be obtained from the Federal Aviation Administration, Transport Airplane Directorate, 1601 Lind Avenue, S.W., Renton, Washington, 98055-4056.

(4) EASA AMC 25.1322 (Alerting Systems).

(5) EASA AMC 25-11 (Electronic Display Systems).

(6) EASA AMC 25.1309 (System Design and Analysis).

(7) EASA AMC 20-115() Recognition of EUROCAE ED-12()/RTCA DO-178().

b. *Industry Documents*.

(1) Aerospace Recommended Practice (ARP) 450D, Flight Deck Visual, Audible and Tactile Signals; ARP 4012/4, Flight Deck Alerting Systems (FAS). These documents can be obtained from the Society of Automotive Engineers, Inc. (SAE), 400 Commonwealth Drive, Warrendale, Pennsylvania 15096.

(2) EUROCAE ED-14D/RTCA document DO-160D or latest version, Environmental Conditions and Test Procedures for Airborne Equipment; EUROCAE ED-12B/RTCA document DO-178() as recognized by EASA AMC 20-115(), Software Considerations in Airborne Systems and Equipment Certification. RTCA documents can be

obtained from the RTCA, One McPherson Square, Suite 500, 1425 K Street Northwest, Washington, D.C. 20005.

(3) ARINC 726, Flight Warning Computer System. This document can be obtained from the ARINC, 2551 Riva Road, Annapolis, Maryland 21401.

4. *BACKGROUND*. A number of aeroplane accidents have occurred because the aeroplane was not properly configured for take-off and a warning was not provided to the flight crew by the take-off configuration warning system. Investigations of these accidents have indicated a need for guidance material for design and approval of take-off configuration warning systems.

5. *DISCUSSION.*

a. Regulatory Basis.

(1) CS 25.703, "Take-off warning system," requires that a take-off configuration warning system be installed in large aeroplanes. This requirement was introduced with JAR-25 Amendment 5 effective 1.1.79. On the FAR side, this was added to Part 25 by Amendment 25-42 effective on March 1, 1978. CS 25.703 requires that a take-off warning system be installed and provide an aural warning to the flight crew during the initial portion of the take off roll, whenever the aeroplane is not in a configuration which would allow a safe take-off. The intent of this rule is to require that the take-off configuration warning system cover (a) only those configurations of the required systems which would be unsafe, and (b) the effects of system failures resulting in wrong surface or system functions if there is not a separate and adequate warning already provided. According to the preamble of Amendment 25-42, the take-off warning system should serve as "back-up for the checklist, particularly in unusual situations, e.g., where the checklist is interrupted or the take-off delayed." Conditions for which warnings are required include wing flaps or leading edge devices not within the approved range of take-off positions, and wing spoilers (except lateral control spoilers meeting the requirements of CS 25.671), speed brakes, parking brakes, or longitudinal trim devices in a position that would not allow a safe take-off. Consideration should also be given to adding rudder trim and aileron (roll) trim if these devices can be placed in a position that would not allow a safe take-off.

(2) Prior to CS-25 Amendment 5 and FAR 25 Amendment 25-42, there was no requirement for a take-off configuration warning system to be installed in large aeroplanes. Since this amendment is not retroactive, some large aeroplane models in service today may not have take-off configuration warning systems; however, all large turbojet transports currently in service, even those with a certification basis established prior to 1978, include a take-off configuration warning system in the basic design. These include the majority of large aeroplanes.

(3) Other general rules such as CS 25.1301, 25.1309, 25.1322, 25.1357 and 25.1431 for electronic system installations also apply to take-off configuration warning systems.

b. *System Criticality*.

(1) It has been Aviation Authorities policy to categorise systems designed to alert the flight crew of potentially hazardous operating conditions as being at a level of criticality associated with a probable failure condition. (For a definition of this terminology together with discussions and guidelines on the classification of failure conditions and the probability of failures, see AMC 25.1309). This is because

failures of these systems, in themselves, are not considered to create an unsafe condition, reduce the capability of the aeroplane, or reduce the ability of the crew to cope with adverse operating conditions. Other systems which fall into this category include stall warning systems, overspeed warning systems, ground proximity warning systems, and windshear warning systems.

(2) Even though AMC 25.1309 does not define an upper probability limit for probable failure conditions, generally, it can be shown by analysis that such systems have a probability of failure (of the ability to adequately give a warning) which is approximately 1.0 x 10E-3 or less per flight hour. This probability does not take into account the likelihood that a warning will be needed. Systems which are designed to meet this requirement are usually single channel systems with limited built-in monitoring. Maintenance or pre-flight checks are relied on to limit the exposure time to undetected failures which would prevent the system from operating adequately.

(3) Applying the practice given in sub-paragraphs b(1) and b(2) above to take-off configuration warning systems is not considered to result in an adequate level of safety when the consequence of the combination of failure of the system and a potentially unsafe take-off configuration could result in a major/catastrophic failure condition. Therefore, these systems should be shown to meet the criteria of AMC 25.1309 pertaining to a major failure condition, including design criteria and in-service maintenance at specified intervals. This will ensure that the risk of the take-off configuration warning system being unavailable when required to give a warning, if a particular unsafe configuration occurs, will be minimised.

(4) If such systems use digital electronic technology, a software level should be used, in accordance with the applicable version of EUROCAE ED-12()/RTCA document DO-178(), as recognized by AMC 20-115() (Recognition of EUROCAE ED-12()/RTCA DO-178()), which is compatible with the system integrity determined by the AMC 25.1309 analysis.

(5) Since a false warning during the take-off run at speeds near V1 may result in an unnecessary rejected take-off (RTO), which could lead to a mishap, the occurrence of a false warning during the take-off should be remote in accordance with AMC 25.1309.

(6) If the take-off configuration warning system is integrated with other systems that provide crew alerting functions, the level of criticality of common elements should be commensurate with that of the take-off configuration warning system unless a higher level is dictated by one or more of the other systems.

c. *Design Considerations*.

(1) A review of existing take-off configuration warning systems has shown a trend towards increased sophistication of design, partly due to the transition towards digital electronic technology which is amenable to self-monitoring and simple testing. The net result has been an improvement in reliability, fewer unwanted warnings and enhanced safety.

(2) With the objective of continuing this trend, new systems should be designed using the objectives and criteria of AMC 25.1309. Analysis should include all the remote sensors, transducers and the elements they depend on, as well as any take-off

configuration warning system line replaceable unit (LRU) and the actual visual and aural warning output devices.

(3) Unwanted warnings may be reduced by inhibiting the take-off configuration warning system where it is safer to do so, e.g., between V1 and VR, so that a hazardous rejected take-off is not attempted. Inhibition of the take-off configuration warning system at high speeds will also avoid any confusion from the occurrence of a warning during a touch-and-go landing. This is because the basic message of an alert is to stop because it is unsafe to take off. It may or may not tell the flight crew which surface or system is wrong. A warning may be more hazardous than reliance on the flight crew's skill and training to cope with the situation.

(4) Even though CS 25.703 specifies those inputs common to most large aeroplanes that must be included in the design, each aeroplane model should be carefully reviewed to ascertain that any configuration or trim setting that could jeopardise a safe take-off has an input to the take-off warning system unless a separate and adequate warning is already provided by another system. There may be aeroplane configurations or electronically positioned lateral or longitudinal trim unique to a particular model that constitute this hazard. In the event that it is necessary to inhibit the warning from a particular system during the entire take-off roll, an equivalent level of safety finding would be required.

(5) Automatic volume adjustment should be provided to maintain the aural warning volume at an appropriate level relative to cockpit ambient sound. According to Report No. DOT/FAA/RD-81/38, II entitled "Aircraft Alerting Systems Standardisation Study, Volume II - Aircraft Alerting System Design Guidelines," aural signals should exceed masked threshold by 8 ± 3 dB.

(6) Of particular importance in the design of take-off configuration warning systems is the elimination of nuisance warnings. These are warnings generated by a system which is functioning as designed but which are inappropriate or unnecessary for the particular phase of operation. Attempting to eliminate nuisance warnings cannot be overemphasised because any indication which could cause the flight crew to perform a high speed rejected take-off, or which distracts or adversely affects the flight crew's performance of the take-off manoeuvre, creates a hazard which could lead to an accident. In addition, any time there are nuisance warnings generated, there is a possibility that the flight crew will be tempted to eliminate them through system deactivation, and by continually doing this, the flight crew may be conditioned to ignore a valid warning.

(7) There are a number of operations that could produce nuisance warnings. Specifically, single engine taxi for twin engine aeroplanes, or in the case of 3 and 4 engine aeroplanes, taxi with fewer than all engines operating is a procedure used by some operators for the purpose of saving fuel. Nuisance warnings have also been caused by trim changes and speed brake handle adjustments.

(8) The means for silencing the aural warning should not be located such that it can be operated instinctively, inadvertently, or by habitual reflexive action. Silencing is defined as the interruption of the aural warning. When silenced, it is preferred that the system will be capable of rearming itself automatically prior to take-off. However, if there is a clear and unmistakable annunciation that the system is silenced, manual re-arming is acceptable.

(9) Each aeroplane model has a different means of arming the take-off configuration warning system, therefore the potential for nuisance warnings varies accordingly. Some existing systems use only a single throttle position, some use position from multiple throttles, some use EPR or N1, and some use a combination of these. When logic from a single operating engine was used, nuisance warnings were common during less than all engine taxi operations because of the higher power settings required to move the aeroplane. These systems were not designed for that type of operation. Because this procedure is used, inputs that arm the system should be judiciously selected taking into account any likely combination of operating and shut-down engines so that nuisance warnings will not occur if the aeroplane is not in take-off configuration.

(10) CS 25.703 requires only an aural alert for the take-off warning system. CS 25.1322 currently specify requirements for visual alerts while related reading material reference 3a(2), 3a(4) and 3b(1) provide guidance for integrated visual and aural annunciations for warnings, cautions and advisory alerting conditions. It has been common industry practice to incorporate the above mentioned references in their aeroplane designs. FAR/CS 25.1322 are planned for revision to incorporate the guidance of these references to reflect current industry practices. Manufacturers may wish to incorporate these alerting concepts to the take-off warning system. If such is the case, the following guidance is offered:

a) A master warning (red) attention getting alert may be provided in the pilot's primary field of view simultaneously with the aural attention getting alert.

b) In addition to or instead of the aural attention getting alert (tone), voice may be used to specify the general problem (Configuration), or the exact problem (slats, flaps, trim, parking brake, etc…).

c) The visual alert may also specify the general problem (Configuration), or the exact problem (slats, flaps, trim, parking brake, etc…).

d) A visual cautionary alert associated with the failure of the Take-off warning system may be provided e.g. "T/O WARN FAIL".

(11) The EASA Agency approved Master Minimum Equipment List (MMEL) includes those items of equipment related to airworthiness and operating regulations and other items of equipment which the Agency finds may be inoperative and yet maintain an acceptable level of safety by appropriate conditions and limitations. No MMEL relief is provided for an inoperative take-off configuration warning. Therefore, design of these systems should include proper system monitoring including immediate annunciation to the flight crew should a failure be identified or if power to the system is interrupted.

d. *System Tests and Test Intervals*.

(1) When manual tests or checks are required to show compliance with CS 25.1309, by detecting the presence of and limiting the exposure time to a latent failure that would render the warning inoperative, they should be adequate, simple and straight forward in function and interval to allow a quick and proper check by the flight crew and maintenance personnel. Flight crew checks may be specified in the approved Aeroplane Flight Manual (AFM) and, depending on the complexity of the take-off configuration warning system and the aeroplane, maintenance tasks may be conventional Maintenance Review Board (MRB) designed tasks or listed as

Certification Check Requirements (CCR) where appropriate, as defined in AMC 25.1309, and determined as part of the approval process between the manufacturer and the certification office.

(2) The specified tests/checks established in accordance with sub-paragraph 5d(1) above should be demonstrated as part of the approval process and should show that each input sensor as well as the control and logic system and its emitters, including the indication system, are individually verified as required to meet sub-paragraph 5b(3). It should also be demonstrated that the warning self cancels when required to do so, for example by retarding the throttles or correcting the wrong configuration.

e. *Test Considerations*.

(1) During flight testing it should be shown that the take-off configuration warning system does not issue nuisance alerts or interfere with other systems. Specific testing should be conducted to ensure that the take-off configuration warning system works satisfactorily for all sensor inputs to the system. Flight testing should include reconfiguration of the aeroplane during touch and go manoeuvres.

(2) It should be shown by test or analysis that for all requested power settings, feasible weights, taxiway slopes, temperatures and altitudes, there will be no nuisance warnings, nor failure to give a warning when necessary (e.g., cold conditions, derated take-off), for any reasonable configuration of engines operating or shut down. This is to test or simulate all expected operational configurations. Reasonable pilot technique for applying power should be presumed.

(3) The means for silencing the aural warning by the flight crew will be evaluated to assure that the device is not accessible instinctively and it is properly protected from inadvertent activation. Automatic or manual re-arming of the warning system will be evaluated.

[Amdt 25/2]

LANDING GEAR

CS 25.721 General

ED Decision 2003/2/RM

(a) The main landing gear system must be designed so that if it fails due to overloads during take-off and landing (assuming the overloads to act in the upward and aft directions), the failure mode is not likely to cause –

(1) For aeroplanes that have a passenger seating configuration, excluding pilots seats, of nine seats or less, the spillage of enough fuel from any fuel system in the fuselage to constitute a fire hazard; and

(2) For aeroplanes that have a passenger seating configuration, excluding pilots seats, of 10 seats or more, the spillage of enough fuel from any part of the fuel system to constitute a fire hazard.

(b) Each aeroplane that has a passenger seating configuration, excluding pilots seats, of 10 or more must be designed so that with the aeroplane under control it can be landed on a paved runway with any one or more landing gear legs not extended without sustaining a structural component failure that is likely to cause the spillage of enough fuel to constitute a fire hazard.

(c) Compliance with the provisions of this paragraph may be shown by analysis or tests, or both.

CS 25.723 Shock absorption tests

ED Decision 2003/2/RM

(a) The analytical representation of the landing gear dynamic characteristics that is used in determining the landing loads must be validated by energy absorption tests. A range of tests must be conducted to ensure that the analytical representation is valid for the design conditions specified in CS 25.473.

(1) The configurations subjected to energy absorption tests at limit design conditions must include at least the design landing weight or the design takeoff weight, whichever produces the greater value of landing impact energy.

(2) The test attitude of the landing gear unit and the application of appropriate drag loads during the test must simulate the aeroplane landing conditions in a manner consistent with the development of rational or conservative limit loads.

(b) The landing gear may not fail in a test, demonstrating its reserve energy absorption capacity, simulating a descent velocity of 3.7 m/s (12 fps) at design landing weight, assuming aeroplane lift not greater than the aeroplane weight acting during the landing impact.

(c) In lieu of the tests prescribed in this paragraph, changes in previously approved design weights and minor changes in design may be substantiated by analyses based on previous tests conducted on the same basic landing gear system that has similar energy absorption characteristics.

AMC 25.723 Shock absorption tests

ED Decision 2006/005/R

1. PURPOSE. This AMC sets forth an acceptable means, but not the only means, of demonstrating compliance with the provisions of CS-25 related to the use of landing gear shock absorption tests and analyses to determine landing loads for large aeroplanes.

2. RELATED CERTIFICATION SPECIFICATIONS. CS 25.723 "Shock absorption tests" and CS 25.473 "Landing load conditions and assumptions."

3. SHOCK ABSORPTION TESTS.

   a. Validation of the landing gear characteristics. Shock absorption tests are necessary to validate the analytical representation of the dynamic characteristics of the landing gear unit that will be used to determine the landing loads. A range of tests should be conducted to ensure that the analytical model is valid for all design conditions. In addition, consideration should be given to ensuring that the range of test configurations is sufficient for justifying the use of the analytical model for foreseeable future growth versions of the aeroplane.

   b. Recommended test conditions for new landing gear units. The design takeoff weight and the design landing weight conditions should both be included as configurations subjected to energy absorption tests. However, in cases where the manufacturer has supporting data from previous experience in validating the analytical model using landing gear units of similar design concept, it may be sufficient to conduct tests of the new landing gear at only the condition associated with maximum energy. The landing gear used to provide the supporting data may be from another model aircraft but should be of approximately the same size with similar components.

   c. Changes to type designs. CS 25.723(c) allows changes in previously approved design weights and minor changes in design to be substantiated by analyses based on tests of the same basic landing gear unit with similar energy absorption characteristics.

      A landing gear unit would be considered to be of “the same basic landing gear system” when the design concept has not been changed. “Similar energy absorption characteristics” means that the changes to the landing gear unit, either taken individually or as a whole, would not have a significant effect on the validation of the analytical results for the modified aeroplane. Changes that may be acceptable without further energy absorption tests include minor changes and adjustments incorporated in the landing gear unit to maintain similar energy absorption characteristics with changes in design weight and landing speeds.

      For example, the following changes may be acceptable without further tests:

      (1) Minor changes in shock absorber details including pre-load, compression ratio, orifice sizes, metering pin profiles.

      (2) Minor changes in tyre characteristics.

      (3) Minor changes in unsprung mass (e.g. brakes).

      (4) Local strengthening or minor sizing changes to the landing gear.

      To allow justification by analysis for the reserve energy requirement, neither the shock strut nor the tyres should bottom during the reserve energy analysis or the tests upon which the analysis is correlated.

4. LIMIT FREE DROP TESTS.

a. Compliance with CS 25.723(a) may be shown by free drop tests, provided they are made on the complete aeroplane, or on units consisting of a wheel, tyre, and shock absorber, in their proper positions, from free drop heights not less than--

(1) 475 mm (18.7 inches) for the design landing weight conditions; and

(2) 170 mm (6.7 inches) for the design takeoff weight conditions.

b. If aeroplane lift is simulated by air cylinders or by other mechanical means, the weight used for the drop must be equal to W. If the effect of aeroplane lift is represented in free drop tests by a reduced weight, the landing gear must be dropped with an effective weight equal to

$$W_e = W\left[\frac{h + (1 - L)d}{h + d}\right]$$

where:

W_e = the effective weight to be used in the drop test (kg);

h = specified free drop height (mm);

d = deflection under impact of the tyre (at the approved inflation pressure) plus the vertical component of the axle travel relative to the drop weight (mm);

W = W_M for main gear units (kg), equal to the static weight on that unit with the aeroplane in the level attitude (with the nose wheel clear in the case of nose wheel type aeroplanes);

W = W_T for tail gear units (kg), equal to the static weight on the tail unit with the aeroplane in the tail-down attitude;

W = W_N for nose wheel units (kg), equal to the vertical component of the static reaction that would exist at the nose wheel, assuming that the mass of the aeroplane acts at the centre of gravity and exerts a force of 1.0 *g* downward and 0.25 *g* forward; and

L = ratio of the assumed aeroplane lift to the aeroplane weight, but not more than 1.0.

c. The drop test attitude of the landing gear unit and the application of appropriate drag loads during the test must simulate the aeroplane landing conditions in a manner consistent with the development of rational or conservative limit loads.

d. The value of *d* used in the computation of W*e* in paragraph 4.(b) of this AMC may not exceed the value actually obtained in the drop test.

5. RESERVE ENERGY FREE DROP TESTS.

a. Compliance with the reserve energy absorption condition specified in CS 25.723(b) may be shown by free drop tests provided the drop height is not less than 69 cm (27 inches).

b. If aeroplane lift is simulated by air cylinders or by other mechanical means, the weight used for the drop must be equal to W. If the effect of aeroplane lift is represented in free drop tests by an equivalent reduced weight, the landing gear must be dropped with an effective weight:

$$W_e = \left[\frac{Wh}{h+d}\right]$$

where the symbols and other details are the same as in paragraph 4 above.

[Amdt 25/2]

CS 25.729 Retracting mechanism

ED Decision 2003/2/RM

(a) *General*. For aeroplanes with retractable landing gear, the following apply:

(1) The landing gear retracting mechanism, wheel well doors, and supporting structure, must be designed for –

(i) The loads occurring in the flight conditions when the gear is in the retracted position;

(ii) The combination of friction loads, inertia loads, brake torque loads, air loads, and gyroscopic loads resulting from the wheels rotating at a peripheral speed equal to 1·23 V_{SR} (with the flaps in takeoff position at design take-off weight), occurring during retraction and extension at any airspeed up to 1·5 V_{SR1} with the wing-flaps in the approach position at design landing weight, and

(iii) Any load factor up to those specified in CS 25.345(a) for the wing-flaps extended condition.

(2) Unless there are other means to decelerate the aeroplane in flight at this speed, the landing gear, the retracting mechanism, and the aeroplane structure (including wheel well doors) must be designed to withstand the flight loads occurring with the landing gear in the extended position at any speed up to 0·67 V_C.

(3) Landing gear doors, their operating mechanism, and their supporting structures must be designed for the yawing manoeuvres prescribed for the aeroplane in addition to the conditions of airspeed and load factor prescribed in sub-paragraphs (a)(1) and (2) of this paragraph.

(b) *Landing gear lock*. There must be positive means to keep the landing gear extended in flight and on the ground. There must be positive means to keep the landing gear and doors in the correct retracted position in flight, unless it can be shown that lowering of the landing gear or doors, or flight with the landing gear or doors extended, at any speed, is not hazardous.

(c) *Emergency operation*. There must be an emergency means for extending the landing gear in the event of –

(1) Any reasonably probable failure in the normal retraction system; or

(2) The failure of any single source of hydraulic, electric, or equivalent energy supply.

(d) *Operation test.* The proper functioning of the retracting mechanism must be shown by operation tests.

(e) *Position indicator and warning device.* (See AMC 25.729(e).) If a retractable landing gear is used, there must be a landing gear position indicator easily visible to the pilot or to the appropriate

crew members (as well as necessary devices to actuate the indicator) to indicate without ambiguity that the retractable units and their associated doors are secured in the extended (or retracted) position. The means must be designed as follows:

(1) If switches are used, they must be located and coupled to the landing gear mechanical systems in a manner that prevents an erroneous indication of 'down and locked' if the landing gear is not in a fully extended position, or of 'up and locked' if the landing gear is not in the fully retracted position. The switches may be located where they are operated by the actual landing gear locking latch or device.

(2) The flight crew must be given an aural warning that functions continuously, or is periodically repeated, if a landing is attempted when the landing gear is not locked down.

(3) The warning must be given in sufficient time to allow the landing gear to be locked down or a go-around to be made.

(4) There must not be a manual shut-off means readily available to the flight crew for the warning required by sub-paragraph (e)(2) of this paragraph such that it could be operated instinctively, inadvertently or by habitual reflexive action.

(5) The system used to generate the aural warning must be designed to minimise false or inappropriate alerts.

(6) Failures of systems used to inhibit the landing gear aural warning, that would prevent the warning system from operating, must be improbable.

(7) A clear indication or warning must be provided whenever the landing gear position is not consistent with the landing gear selector lever position.

(f) *Protection of equipment on landing gear and in wheel wells*. Equipment that is essential to the safe operation of the aeroplane and that is located on the landing gear and in wheel wells must be protected from the damaging effects of –

(1) A bursting tyre, (see AMC 25.729(f));

(2) A loose tyre tread unless it is shown that a loose tyre tread cannot cause damage; and

(3) Possible wheel brake temperatures (see AMC 25.729(f)).

AMC 25.729(e) Retracting mechanism

ED Decision 2003/2/RM

1 When light indicators are used, they should be arranged so that –

a. A green light for each unit is illuminated only when the unit is secured in the correct landing position.

b. A warning light consistent with CS 25.1322 is illuminated at all times except when the landing gear and its doors are secured in the landing or retracted position.

2 The warning required by CS 25.729(e)(2) should preferably operate whatever the position of wing leading- or trailing-edge devices or the number of engines operating.

3 The design should be such that nuisance activation of the warning is minimised, for example –

a. When the landing gear is retracted after a take-off following an engine failure, or during a takeoff when a common flap setting is used for take-off and landing;

b. When the throttles are closed in a normal descent; or

c. When flying at low altitude in clean or low speed configuration (special operation).

4 Inhibition of the warning above a safe altitude out of final approach phase either automatically or by some other means to prevent these situations is acceptable, but it should automatically reset for a further approach.

5 Means to de-activate the warning required by CS 25.729(e) may be installed for use in abnormal or emergency conditions provided that it is not readily available to the flight crew, i.e. the control device is protected against inadvertent actuation by the flight crew and its de-activated state is obvious to the flight crew.

AMC 25.729(f) Protection of Equipment on Landing Gear and in Wheel Wells

ED Decision 2003/2/RM

The use of fusible plugs in the wheels is not a complete safeguard against damage due to tyre explosion.

Where brake overheating could be damaging to the structure of, or equipment in, the wheel wells, an indication of brake temperature should be provided to warn the pilot.

CS 25.731 Wheels

ED Decision 2003/2/RM

(a) Each main and nose wheel must be approved.

(b) The maximum static load rating of each wheel may not be less than the corresponding static ground reaction with –

(1) Design maximum weight; and

(2) Critical centre of gravity.

(c) The maximum limit load rating of each wheel must equal or exceed the maximum radial limit load determined under the applicable ground load requirements of this CS-25.

(d) *Overpressure burst prevention.* Means must be provided in each wheel to prevent wheel failure and tyre burst that may result from excessive pressurisation of the wheel and tyre assembly.

(e) *Braked wheels*. Each braked wheel must meet the applicable requirements of CS 25.735.

CS 25.733 Tyres

ED Decision 2003/2/RM

(a) When a landing gear axle is fitted with a single wheel and tyre assembly, the wheel must be fitted with a suitable tyre of proper fit with a speed rating approved by the Agency that is not exceeded under critical conditions, and with a load rating approved by the Agency that is not exceeded under –

(1) The loads on the main wheel tyre, corresponding to the most critical combination of aeroplane weight (up to the maximum weight) and centre of gravity position; and

(2) The loads corresponding to the ground reactions in sub-paragraph (b) of this paragraph, on the nose-wheel tyre, except as provided in sub-paragraphs (b)(2) and (b)(3) of this paragraph.

(b) The applicable ground reactions for nosewheel tyres are as follows:

(1) The static ground reaction for the tyre corresponding to the most critical combination of aeroplane weight (up to maximum ramp weight) and centre of gravity position with a force of 1·0 g acting downward at the centre of gravity. This load may not exceed the load rating of the tyre.

(2) The ground reaction of the tyre corresponding to the most critical combination of aeroplane weight (up to maximum landing weight) and centre of gravity position combined with forces of 1·0 g downward and 0·31 g forward acting at the centre of gravity. The reactions in this case must be distributed to the nose and main wheels by the principles of static's with a drag reaction equal to 0·31 times the vertical load at each wheel with brakes capable of producing this ground reaction. This nose tyre load may not exceed 1·5 times the load rating of the tyre.

(3) The ground reaction of the tyre corresponding to the most critical combination of aeroplane weight (up to maximum ramp weight) and centre of gravity position combined with forces of 1·0 g downward and 0·20 g forward acting at the centre of gravity. The reactions in this case must be distributed to the nose and main wheels by the principles of static's with a drag reaction equal to 0·20 times the vertical load at each wheel with brakes capable of producing this ground reaction. This nose tyre load may not exceed 1·5 times the load rating of the tyre.

(c) When a landing gear axle is fitted with more than one wheel and tyre assembly, such as dual or dual-tandem, each wheel must be fitted with a suitable tyre of proper fit with a speed rating approved by the Agency that is not exceeded under critical conditions, and with a load rating approved by the Agency that is not exceeded by –

(1) The loads on each main wheel tyre, corresponding to the most critical combination of aeroplane weight (up to maximum weight) and centre of gravity position, when multiplied by a factor of 1·07; and

(2) Loads specified in sub-paragraphs (a)(2), (b)(1), (b)(2) and (b)(3) of this paragraph on each nose-wheel tyre.

(d) Each tyre installed on a retractable landing gear system must, at the maximum size of the tyre type expected in service, have a clearance to surrounding structure and systems that is adequate to prevent unintended contact between the tyre and any part of the structure or systems.

(e) For an aeroplane with a maximum certificated take-off weight of more than 34019 kg (75 000 pounds), tyres mounted on braked wheels must be inflated with dry nitrogen or other gases shown to be inert so that the gas mixture in the tyre does not contain oxygen in excess of 5% by volume, unless it can be shown that the tyre liner material will not produce a volatile gas when heated, or that means are provided to prevent tyre temperatures from reaching unsafe levels.

CS 25.735 Brakes and braking systems

ED Decision 2006/005/R

(a) *Approval.* Each assembly consisting of a wheel(s) and brake(s) must be approved.

(b) *Brake system capability.* The brake system, associated systems and components must be designed and constructed so that:

(1) If any electrical, pneumatic, hydraulic, or mechanical connecting or transmitting element fails, or if any single source of hydraulic or other brake operating energy supply is lost, it is possible to bring the aeroplane to rest with a braked roll stopping distance of not more than two times that obtained in determining the landing distance as prescribed in CS 25.125.

(2) Fluid lost from a brake hydraulic system following a failure in, or in the vicinity of, the brakes is insufficient to cause or support a hazardous fire on the ground or in flight.

(c) *Brake controls.* The brake controls must be designed and constructed so that:

(1) Excessive control force is not required for their operation.

(2) If an automatic braking system is installed, means are provided to:

(i) Arm and disarm the system, and

(ii) Allow the pilot(s) to override the system by use of manual braking.

(d) *Parking brake.* The aeroplane must have a parking brake control that, when selected on, will, without further attention, prevent the aeroplane from rolling on a dry and level paved runway when the most adverse combination of maximum thrust on one engine and up to maximum ground idle thrust on any, or all, other engine(s) is applied. The control must be suitably located or be adequately protected to prevent inadvertent operation. There must be indication in the cockpit when the parking brake is not fully released.

(e) *Anti-skid system.* If an anti-skid system is installed:

(1) It must operate satisfactorily over the range of expected runway conditions, without external adjustment.

(2) It must, at all times, have priority over the automatic braking system, if installed.

(f) *Kinetic energy capacity* –

(1) *Design landing stop.* The design-landing stop is an operational landing stop at maximum landing weight. The design landing stop brake kinetic energy absorption requirement of each wheel, brake, and tyre assembly must be determined. It must be substantiated by dynamometer testing that the wheel, brake and tyre assembly is capable of absorbing not less than this level of kinetic energy throughout the defined wear range of the brake. The energy absorption rate derived from the aeroplane manufacturer's braking requirements must be achieved. The mean deceleration must not be less than 3.1 m/s^2 (10 fps^2).

(2) *Maximum kinetic energy accelerate-stop.* The maximum kinetic energy accelerate-stop is a rejected take-off for the most critical combination of aeroplane take-off weight and speed. The accelerate-stop brake kinetic energy absorption requirement of each wheel, brake, and tyre assembly must be determined. It must be substantiated by dynamometer testing that the wheel brake and tyre assembly is capable of absorbing not less than this level of kinetic energy throughout the defined wear range of the brake. The energy absorption rate derived from the aeroplane's braking requirements must be achieved. The mean deceleration must not be less than 1.8 m/s^2 (6 fps^2).

(3) *Most severe landing stop.* The most severe landing stop is a stop at the most critical combination of aeroplane landing weight and speed. The most severe landing stop brake kinetic energy absorption requirement of each wheel, brake, and tyre assembly must be determined. It must be substantiated by dynamometer testing that, at the declared fully worn limit(s) of the brake heat sink, the wheel, brake and tyre assembly is capable of

absorbing not less than this level of kinetic energy. The most severe landing stop need not be considered for extremely improbable failure conditions or if the maximum kinetic energy accelerate-stop energy is more severe.

(g) *Brake condition after high kinetic energy dynamometer stop(s).* Following the high kinetic energy stop demonstration(s) required by sub-paragraph (f) of this paragraph, with the parking brake promptly and fully applied for at least 3 minutes, it must be demonstrated that for at least 5 minutes from application of the parking brake, no condition occurs (or has occurred during the stop), including fire associated with the tyre or wheel and brake assembly, that could prejudice the safe and complete evacuation of the aeroplane.

(h) *Stored energy systems.* An indication to the flight crew of the usable stored energy must be provided if a stored energy system is used to show compliance with sub-paragraph (b)(1) of this paragraph. The available stored energy must be sufficient for:

(1) At least 6 full applications of the brakes when an anti-skid system is not operating; and

(2) Bringing the aeroplane to a complete stop when an anti-skid system is operating, under all runway surface conditions for which the aeroplane is certificated.

(i) *Brake wear indicators.* Means must be provided for each brake assembly to indicate when the heat sink is worn to the permissible limit. The means must be reliable and readily visible.

(j) *Over-temperature burst prevention.* Means must be provided in each braked wheel to prevent a wheel failure, a tyre burst, or both, that may result from elevated brake temperatures. Additionally, all wheels must meet the requirements of CS 25.731(d).

(k) *Compatibility*. Compatibility of the wheel and brake assemblies with the aeroplane and its systems must be substantiated.

[Amdt 25/2]

AMC 25.735 Brakes and Braking Systems Certification Tests and Analysis

ED Decision 2006/005/R

1. PURPOSE

This AMC (Acceptable Means of Compliance) which is similar to the FAA Advisory Circular AC 25.735-1 provides guidance material for use as an acceptable means, although not the only means, of demonstrating compliance with the requirements of CS 25.731 and CS 25.735. It also identifies other paragraphs of the EASA Certification Specifications (CS) that contain related requirements and other related and complementary documents.

2. RELATED REGULATORY MATERIAL AND COMPLEMENTARY DOCUMENTS

a. Related EASA Certification Specifications

PART-21 and CS-25 paragraphs (and their associated AMC material where applicable) that prescribe requirements related to the design substantiation and certification of brakes and braking systems include:

21A.303	Compliance with applicable Requirements
CS 25.101	General
CS 25.109	Accelerate-stop distance
CS 25.125	Landing

CS 25.301	Loads
CS 25.303	Factor of safety
CS 25.729	Retracting mechanism
CS 25.733	Tyres
CS 25.1301	Function and installation
CS 25.1309	Equipment, systems and installations
CS 25.1322	Warning, caution and advisory lights
CS 25.1501	General: Systems and Equipment Limitations
CS 25.1524	Systems and equipment limitations
CS 25.1541	Markings and Placards: General
CS 25.1591	Supplementary performance information

Additional Part-21 and CS-25 paragraphs (and their associated AMC material where applicable) that prescribe requirements which can have a significant impact on the overall design and configuration of brakes and braking systems are, but are not limited to:

21A.101	Designation of applicable certification specifications and environmental protection requirements
CS 25.671	General: Control Systems
CS 25.863	Flammable fluid fire protection
CS 25.1001	Fuel jettisoning system
CS 25.1183	Flammable fluid-carrying components
CS 25.1185	Flammable fluids
CS 25.1315	Negative acceleration (FAR 25.943)

b. Complementary Documents

Documents that provide appropriate standards for the design substantiation and certification of Brakes and Braking Systems are, but are not limited to:

(i) European Technical Standard Orders (ETSO)

ETSO-C47	Pressure Instruments - Fuel, Oil and Hydraulic
ETSO-C26c	Aircraft Wheels and Wheel-Brake Assemblies with Addendum I
ETSO-2C75	Hydraulic Hose Assemblies
ETSO-C62d	Aircraft Tyres
ETSO-C135	Transport Aeroplane Wheels and Wheel and Brake Assemblies

(ii) Advisory Circulars/Acceptable Means of Compliance

AC 25.1309-1A	System Design and Analysis
AC 25-7A	Flight Test Guide for Certification of Transport Category Airplanes
AC 21-29A	Detecting and Reporting Suspected Unapproved Parts
AC 91-6A	Water, Slush, and Snow on the Runway AMC 25.1591 The derivation and methodology of performance information for use when taking-off and landing with contaminated runway surface conditions.
AMC 20-115()	Recognition of EUROCAE ED-12()/RTCA DO-178()

(iii) Society of Automotive Engineers (SAE) Documents

ARP 597C	Wheels and Brakes, Supplementary Criteria for Design Endurance - Civil Transport Aircraft
ARP 813A	Maintainability Recommendations for Aircraft Wheels and Brakes
AIR 1064B	Brake Dynamics
ARP 1070B	Design and Testing of Anti-skid Brake Control Systems for Total Aircraft Compatibility
AS 1145A	Aircraft Brake Temperature Monitor System (BTMS)
ARP 1619	Replacement and Modified Brakes and Wheels
AIR 1739	Information on Anti-skid Systems
ARP 1907	Automatic Braking Systems Requirements
AIR 1934	Use of Carbon Heat Sink Brakes on Aircraft
ARP 4102/2	Automatic Braking System (ABS)
ARP 4752	Aerospace - Design and Installation of Commercial Transport Aircraft Hydraulic Systems (Note: This document provides a wide range of Civil, Military and Industry document references and standards which may be appropriate.)

(iv) International Organisation for Standardisation (ISO) Documents

ISO 7137	Environmental Conditions and Test Procedures for Airborne Equipment.

(v) US Military Documents

MIL-STD-810	Environmental Test Methods and Engineering Guidelines.

(vi) The European Organisation for Civil Aviation Equipment Documents

ED-14D/RTCA DO-160D	Environmental Conditions and Test Procedures for Airborne Equipment. Issued 29 July 1997
ED-12()/RTCA DO-178()	Software Considerations in Airborne Systems and Equipment Certification, as recognized by AMC 20-115().

3. RESERVED

4. DISCUSSION

a. Ref. CS 25.735(a) Approval

(1) CS 25.735(a) states that each assembly consisting of a wheel(s) and brake(s) must be approved. Each wheel and brake assembly fitted with each designated and approved tyre type and size, where appropriate, should be shown to be capable of meeting the minimum standards and capabilities detailed in the applicable European Technical Standard Order (E)TSO, in conjunction with the type certification procedure for the aeroplane, or by any other means approved by the Agency. This applies equally to replacement, modified, and refurbished wheel and brake assemblies or components, whether the changes are made by the Original Equipment Manufacturer (OEM) or others. Additionally, the components of the wheels, brakes, and braking systems should be designed to:

(a) Withstand all pressures and loads, applied separately and in conjunction, to which they may be subjected in all operating conditions for which the aeroplane is certificated.

(b) Withstand simultaneous applications of normal and emergency braking functions, unless adequate design measures have been taken to prevent such a contingency.

(c) Meet the energy absorption requirements without auxiliary cooling devices (such as cooling fans).

(d) Not induce unacceptable vibrations at any likely ground speed and condition or any operating condition (such as retraction or extension).

(e) Protect against the ingress or effects of foreign bodies or materials (water, mud, oil, and other products) that may adversely affect their satisfactory performance. Following initial aeroplane certification, any additional wheel and brake assemblies should meet the applicable airworthiness requirements specified in 21 A.101(a) and (b) to eliminate situations that may have adverse consequences on aeroplane braking control and performance. This includes the possibility of the use of modified brakes either alone (i.e., as a ship set) or alongside the OEM's brakes and the mixing of separately approved assemblies.

(2) Refurbished and Overhauled Equipment. Refurbished and overhauled equipment is equipment overhauled and maintained by the applicable OEM or its designee in accordance with the OEM's Component Maintenance Manual (CMM) and associated documents. It is necessary to demonstrate compliance of all refurbished configurations with the applicable (E)TSO and aeroplane manufacturer's specifications. It is also necessary to verify that performances are compatible for any combination of mixed brake configurations, including refurbished/overhauled and new brakes. It is essential to assure that Aeroplane Flight Manual braking performance and landing gear and aeroplane structural integrity are not adversely altered.

(3) Replacement and Modified Equipment. Replacement and modified equipment includes changes to any approved wheel and brake assemblies not addressed under paragraph 4a(2) of this AMC. Consultation with the aeroplane manufacturer on the extent of testing is recommended. Particular attention should be paid to potential differences in the primary brake system parameters (e.g., brake torque, energy capacity, vibration, brake sensitivity, dynamic response, structural strength, and wear state). If comparisons are made to previously approved equipment, the test articles (other than the proposed parts to be changed) and conditions should be comparable, as well as the test procedures and equipment on which comparative tests are to be conducted. For wheel and brake assembly tests, the tyre size, manufacturer, and ply rating used for the test should be the same and the tyre condition should be comparable. For changes of any heat sink component parts, structural parts (including the wheel), and friction elements, it is necessary to provide evidence of acceptable performance and compatibility with the aeroplane and its systems.

(a) Minor Changes. Changes to a brake might be considered as a minor change, as long as the changes are not to the friction elements. The proposed change cannot affect the aeroplane stopping performance, brake energy absorption

characteristics, and/or continued airworthiness of the aeroplane or wheel and brake assembly (e.g., vibration and/or thermal control, and brake retraction integrity). Technical evidence justifying a minor change should be provided.

(b) Major Changes. Changes to a wheel assembly outside the limits allowed by the OEM's CMM should be considered a major change due to potential airworthiness issues.

(c) Past history with friction elements has indicated the necessity of ongoing monitoring (by dynamometer test) of frictional and energy absorption capabilities to assure that they are maintained over the life of the aeroplane program. These monitoring plans have complemented the detection and correction of unacceptable deviations. A monitoring plan should be submitted to the cognisant Certification Office to ensure continued airworthiness of the product.

(d) Intermixing of wheel and brake assemblies from different suppliers is generally not acceptable due to complexities experienced with different friction elements, specific brake control tuning, and other factors.

b. Ref. CS 25.735(b) Brake System Capability

(1) The system should be designed so that no single failure of the system degrades the aeroplane stopping performance beyond doubling the braked roll stopping distance (refer to CS 25.735(b)(1)). Failures are considered to be fracture, leakage, or jamming of a component in the system, or loss of an energy source. Components of the system include all parts that contribute to transmitting the pilot's braking command to the actual generation of braking force. Multiple failures resulting from a single cause should be considered a single failure (e.g., fracture of two or more hydraulic lines as a result of a single tyre failure). Sub-components within the brake assembly, such as brake discs and actuators (or their equivalents), should be considered as connecting or transmitting elements, unless it is shown that leakage of hydraulic fluid resulting from failure of the sealing elements in these sub-components within the brake assembly would not reduce the braking effectiveness below that specified in CS 25.735(b)(1).

(a) In order to meet the stopping distance requirements of CS 25.735(b)(1) in the event of failure of the normal brake system, it is common practice to provide an alternate brake system. The normal and alternate braking systems should be independent, being supplied by separate power sources. Following a failure of the normal system, the changeover to a second system (whether manually or by automatic means) and the functioning of a secondary power source should be effected rapidly and safely. The changeover should not involve risk of wheel locking, whether the brakes are applied or not at the time of changeover.

(b) The brake systems and components should be separated or appropriately shielded so that complete failure of the braking system(s) as a result of a single cause is minimised.

(2) Compliance with CS 25.735(b)(2) may be achieved by:

(a) Showing that fluid released would not impinge on the brake, or any part of the assembly that might cause the fluid to ignite;

(b) Showing that the fluid will not ignite; or

(c) Showing that the maximum amount of fluid released is not sufficient to sustain a fire.

(3) Additionally, in the case of a fire, it may be shown that the fire is not hazardous, taking into consideration such factors as landing gear geometry, location of fire sensitive (susceptibility) equipment and installations, system status, flight mode, etc.

If more than one fluid is allowed for the hydraulic system, compliance should be addressed for all fluids.

c. Ref. CS 25.735(c) Brake Controls

(1) The braking force should increase or decrease progressively as the force or movement applied to the brake control is increased or decreased (refer to CS 25.735(c)(1)). The braking force should respond to the control as quickly as is necessary for safe and satisfactory operation. A brake control intended only for parking need not operate progressively. There should be no requirement to select the parking brake "off" in order to achieve a higher braking force with manual braking.

(2) When an automatic braking system is installed (refer to CS 25.735(c)(2)) such that various levels of braking (e.g., low, medium, high) may be preselected to occur automatically following a touchdown, the pilot(s) should be provided with a means that is separate from other brake controls to arm and/or disarm the system prior to the touchdown.

(3) The automatic braking system design should be evaluated for integrity and non-hazard, including the probability and consequence of insidious failure of critical components, and non interference with the non-automatic braking system. Single failures in the automatic braking system should not compromise non-automatic braking of the aeroplane. Automatic braking systems that are to be approved for use in the event of a rejected take-off should have a single selector position, set prior to take-off, enabling this operating mode.

d. Ref. CS 25.735(d) Parking Brake

It should be demonstrated that the parking brake has sufficient capability in all allowable operating conditions (Master Minimum Equipment List (MMEL) to be able to prevent the rotation of braked wheels. This demonstration is to be accomplished with the stated engine power settings, and with the aeroplane configuration (i.e., ground weight, c.g., position and nose-wheel (or tail-wheel) angle) least likely to result in skidding on a dry, level runway surface (refer to CS 25.735(d)). Use of ground idle thrust on the "other" engine is not mandatory, higher thrust levels may be used to prevent aeroplane motion due to the asymmetric engine thrust. Where reliable test data are available, substantiation by means other than aeroplane testing may be acceptable.

(1) For compliance with the requirement for indication that the parking brake is not fully released, the indication means should be associated, as closely as is practical, with actual application of the brake rather than the selector (control). The intent is to minimise the possibility of false indication due to failures between the brake and the point at which the parking brake state is sensed. This requirement is separate

from, and in addition, to the parking brake requirements associated with CS 25.703(a)(3), Take-off warning systems.

(2) The parking brake control, whether or not it is independent of the emergency brake control, should be marked with the words "Parking Brake" and should be constructed in such a way that, once operated, it can remain in the selected position without further flight crew attention. It should be located where inadvertent operation is unlikely, or be protected by suitable means against inadvertent operation.

e. Ref. CS 25.735(e) Anti-skid System

(1) If an anti-skid system is installed (refer to CS 25.735(e)), then no single failure in the antiskid system should result in the brakes being applied, unless braking is being commanded by the pilot. In the event of an anti-skid system failure, means should be available to allow continued braking without anti-skid. These means may be automatic, pilot controlled, or both.

(2) Compliance with CS 25.735(e)(1) and (e)(2) may be achieved by:

(a) Failures that render the system ineffective should not prevent manual braking control by the pilot(s) and should normally be indicated. Failure of wheels, brakes, or tyres should not inhibit the function of the anti-skid system for unaffected wheel, brake, and tyre assemblies.

(b) The anti-skid system should be capable of giving a satisfactory braking performance over the full range of tyre to runway friction coefficients and surface conditions, without the need for preflight or pre-landing adjustments or selections. The range of friction coefficients should encompass those appropriate to dry, wet, and contaminated surfaces and for both grooved and ungrooved runways.

(c) The use of the phrase “without external adjustment” is intended to imply that once the antiskid system has been optimised for operation over the full range of expected conditions for which the aeroplane is to be type certificated, pre-flight or pre-landing adjustments made to the equipment to enable the expected capabilities to be achieved are not acceptable. For example, a specific prelanding selection for a landing on a contaminated low μ (friction level) runway, following a take-off from a dry high μ runway, should not be necessary for satisfactory braking performance to be achieved.

(d) It should be shown that the brake cycling frequency imposed by the anti-skid installation will not result in excessive loads on the landing gear. Anti-skid installations should not cause surge pressures in the brake hydraulic system that would be detrimental to either the normal or emergency brake system and components.

(e) The system should be compatible with all tyre sizes and type combinations permitted and for all allowable wear states of the brakes and tyres. Where brakes of different types or manufacture are permitted, compatibility should be demonstrated or appropriate means should be employed to ensure that undesirable combinations are precluded.

(f) The anti-skid function must be able to reduce braking for a wheel/tyre that is going into a skid, whether the braking level is commanded by the pilot or an auto-brake system if installed.

f. Ref. CS 25.735(f) Kinetic Energy Capacity

The kinetic energy capacity of each tyre, wheel, and brake assembly should be at least equal to that part of the total aeroplane energy that the assembly will absorb during a stop, with the heat sink at a defined condition at the commencement of the stop (Refer to CS 25.735(f)).

(1) Calculation of Stop Kinetic Energy.

(a) The design landing stop, the maximum kinetic energy accelerate-stop, and the most severe landing stop brake kinetic energy absorption requirements of each wheel and brake assembly should be determined using either of the following methods:

(i) A conservative rational analysis of the sequence of events expected during the braking manoeuvre; or

(ii) A direct calculation based on the aeroplane kinetic energy at the commencement of the braking manoeuvre.

(b) When determining the tyre, wheel, and brake assembly kinetic energy absorption requirement using the rational analysis method, the analysis should use conservative values of the aeroplane speed at which the brakes are first applied, the range of the expected coefficient of friction between the tyres and runway, aerodynamic and propeller drag, powerplant forward thrust, and, if more critical, the most adverse single engine or propeller malfunction.

(c) When determining the tyre, wheel, and brake assembly energy absorption requirement using the direct calculation method, the following formula, which needs to be modified in cases of designed unequal braking distribution, should be used:

$KE = 0.0443\ WV^2/N$ (ft-lb.)

where KE = Kinetic Energy per wheel (ft-lb.)

N = Number of main wheels with brakes

W = Aeroplane Weight (lb.)

V = Aeroplane Speed (knots)

or if SI (Metric) units are used:

$KE = 1/2\ mV^2/N$ (Joule)

where KE = Kinetic Energy per wheel (J)

N = Number of main wheels with brakes

m = Aeroplane Mass (kg.)

V = Aeroplane Speed (m/s)

(d) For all cases, V is the ground speed and takes into account the prevailing operational conditions. All approved landing flap conditions should be considered when determining the design landing stop energy.

(e) These calculations should account for cases of designed unequal braking distributions. "Designed unequal braking distribution" refers to unequal braking loads between wheels that result directly from the design of the aeroplane. An example would be the use of both main-wheel and nosewheel brakes, or the use of brakes on a centreline landing gear supporting lower vertical loads per braked wheel than the main landing gear braked wheels. It is intended that this term should account for effects such as runway crown. Crosswind effects need not be considered.

(f) For the design landing case, the aeroplane speed should not be less than $V_{REF}/1.3$, where V_{REF} is the aeroplane steady landing approach speed at the maximum design landing weight and in the landing configuration at sea level. Alternatively, the aeroplane speed should not be less than V_{SO}, the power-off stall speed of the aeroplane at sea level, at the design landing weight, and in the landing configuration.

(g) For the most severe landing case, the effects and consequences of typical single and multiple failure conditions that are foreseeable events and can necessitate landings at abnormal speeds and weights should be addressed. The critical landing weight for this condition is the maximum take-off weight, less fuel burned and jettisoned during a return to the departure airfield. A 30-minute flight should be assumed, with 15 minutes of active fuel jettisoning if equipped with a fuel jettisoning system.

(2) *Heat Sink Condition at Commencement of the Stop*.

(a) For the maximum kinetic energy accelerate-stop case, the calculation should account for:

(i) The brake temperature following a previous typical landing,

(ii) The effects of braking during taxi-in, the temperature change while parked,

(iii) The effects of braking during taxi-out, and

(iv) The additional temperature change during the take-off acceleration phase, up to the time of brake application.

(b) The analysis may not take account of auxiliary cooling devices. Assessment of ambient conditions within the operational limits established by the applicant and the typical time the aeroplane will be on the ground should be used.

(c) For the most severe landing stop case, the same temperature conditions and changes used for the maximum kinetic energy accelerate-stop case should be assumed, except that further temperature change during the additional flight phase may be considered.

(d) The brake temperature at the commencement of the braking manoeuvre should be determined using the rational analysis method. However, in the absence of such analysis, an arbitrary heat sink temperature should be used equal to the normal ambient temperature, increased by the amount that

would result from a 10 percent maximum kinetic energy accelerate-stop for the acceleratestop case and from a 5 percent maximum kinetic energy accelerate-stop for landing cases.

(3) *Substantiation*.

(a) Substantiation is required to show that the wheel and brake assembly is capable of absorbing the determined levels of kinetic energy at all permitted wear states up to and including the declared fully worn limits. The term “wear state" is used to clarify that consideration should be given to possible inconsistencies or irregularities in brake wear in some circumstances, such as greater wear at one end of the heat sink than the other end. Qualification related to equally distributed heat sink wear may not be considered adequate. If in-service wear distribution is significantly different from wear distribution used during qualification testing, additional substantiation and/or corrective action may be necessary.

(b) The minimum initial brakes-on speed used in the dynamometer tests should not be more than the velocity (V) used in the determination of the kinetic energy requirements of CS 25.735(f). This assumes that the test procedure involved a specific rate of deceleration and, therefore, for the same amount of kinetic energy, a higher initial brakes-on speed would result in a lower rate of energy absorption. Such a situation is recognised and is similarly stated in (E)TSO-C135, which provides an acceptable means for brake approval under CS 25.735(a).

(c) For certification purposes, a brake having a higher initial brakes-on speed is acceptable if the dynamometer test showed that both the energy absorbed and the energy absorption rates required by CS 25.735(f) had been achieved.

(d) Brake qualification tests are not intended as a means of determining expected aeroplane stopping performance, but may be used as an indicator for the most critical brake wear state for aeroplane braking performance measurements.

g. Ref. CS 25.735(g) Brake Condition after High Kinetic Energy Dynamometer Stop(s)

(1) Following the high kinetic energy stop(s), the parking brake should be capable of restraining further movement of the aeroplane and should maintain this capability for the period during which the need for an evacuation of the aeroplane can be determined and then fully accomplished. It should be demonstrated that, with a parking brake application within a period not exceeding 20 seconds of achieving a full stop, or within 20 seconds from the time that the speed is retarded to 37 km/h (20 knots) (or lower), in the event that the brakes are released prior to achieving a full stop (as permitted by (E)TSO-C135), the parking brake can be applied normally and that it remains functional for at least 3 minutes.

(2) Practical difficulties associated with dynamometer design may preclude directly demonstrating the effectiveness of the parking brake in the period immediately following the high energy dynamometer stop(s). Where such difficulties prevail, it should be shown that, for the 3-minute period, no structural failure or other condition of the brake components occurs that would significantly impair the parking brake function.

(3) Regarding the initiation of a fire, it should be demonstrated that no continuous or sustained fire, extending above the level of the highest point of the tyre, occurs before the 5-minute period has elapsed. Neither should any other condition arise during this same period or during the stop, either separately or in conjunction with a fire, that could be reasonably judged to prejudice the safe and complete aeroplane evacuation. Fire of a limited extent and of a temporary nature (e.g., those involving wheel bearing lubricant or minor oil spillage) is acceptable. For this demonstration, neither fire-fighting means nor coolants may be applied.

h. Ref. CS 25.735(h) Stored energy systems

(1) Stored energy systems use a self-contained source of power, such as a pressurised hydraulic accumulator or a charged battery (refer to CS 25.735(h)). This requirement is not applicable for those aeroplanes that provide a number of independent braking systems, including a stored energy system, but are not "reliant" on the stored energy system for the demonstration of compliance with CS 25.735(b).

(2) The indication of usable stored energy should show:

(a) The minimum energy level necessary to meet the requirements of CS 25.735(b)(1) and (h) (i.e., the acceptable level for dispatch of the aeroplane);

(b) The remaining energy level; and

(c) The energy level below which further brake application may not be possible.

(3) If a gas pressurised hydraulic accumulator is to be used as the energy storage means, indication of accumulator pressure alone is not considered adequate means to indicate available stored energy, unless verification can be made of the correct pre-charge pressure with the hydraulic system pressure off and the correct fluid volume with the hydraulic system pressure on. Furthermore, additional safeguards may be necessary to ensure that sufficient energy will be available at the end of the flight. Similar considerations should be made if other stored energy systems are used.

(4) A full brake application cycle is defined as an application from brakes fully released to brakes fully applied, and back to fully released.

i. Ref. CS 25.735(i) Brake wear indicators

The indication means should be located such that no special tool or illumination (except in darkness) is required. Expert interpretation of the indication should not be necessary (refer to CS 25.735(i)).

j. Ref. CS 25.731(d) and CS 25.735(j) Over-temperature and Over-pressure Burst Prevention

Over-temperature and over-pressure burst prevention. Generally, two separate types of protection should be provided: one specifically to release the tyre pressure should the wheel temperature increase to an unacceptable level, and the other to release the tyre pressure should the pressure become unacceptably high, particularly during the inflation process. The temperature sensitive devices are required in braked wheels only, but the pressure sensitive devices are required in all wheels (refer to CS 25.735(j) and 25.731(d)).

(1) The temperature sensitive devices (e.g., fuse or fusible plugs) should be sufficient in number and appropriately located to reduce the tyre pressure to a safe level

before any part of the wheel becomes unacceptably hot, irrespective of the wheel orientation. The devices should be designed and installed so that once operated (or triggered) their continued operation is not impaired by the releasing gas. The effectiveness of these devices in preventing hazardous tyre blow-out or wheel failure should be demonstrated. It should also be demonstrated that the devices will not release the tyre pressure prematurely during take-off and landing, including during "quick turnaround" types of operation.

(2) It should be shown that the over-pressurisation devices, or the devices in conjunction with the tyre inflation means *permanently* installed in the wheel, would not permit the tyre pressure to reach an unsafe level regardless of the capacity of the inflation source.

(3) Both types of devices should normally be located within the structure of the wheel in positions that minimise the risk of damage or tampering during normal maintenance.

k. Ref. CS 25.735(k) Compatibility

Compliance with CS 25.735(k) may be achieved by the following:

(1) As part of the overall substantiation of safe and anomaly free operation, it is necessary to show that no unsafe conditions arise from incompatibilities between the brakes and brake system with other aeroplane systems and structures. Areas that should be explored include anti-skid tuning, landing gear dynamics, tyre type and size, brake combinations, brake characteristics, brake and landing gear vibrations, etc. Similarly, wheel and tyre compatibility should be addressed. These issues should be readdressed when the equipment is modified.

(2) During brake qualification testing, sufficient dynamometer testing over the ranges of permissible brake wear states, energy levels, brake pressures, brake temperatures, and speeds should be undertaken to provide information necessary for systems integration.

[Amdt 25/2]

AMC 25.735(f) Brakes

ED Decision 2003/2/RM

For determination of the design landing brake kinetic energy capacity rating, the initial condition of the brakes may be selected and can be any condition representative of service use, including new, and which satisfies the applicable ETSO or other acceptable brake qualification test standard.

CS 25.745 Nose-wheel steering

ED Decision 2006/005/R

(a) The nose-wheel steering system, unless it is restricted in use to low-speed manoeuvring, must be so designed that exceptional skill is not required for its use during take-off and landing, including the case of cross-wind, and in the event of sudden power-unit failure at any stage during the take-off run. This must be shown by tests. (See AMC 25.745(a).)

(b) It must be shown that, in any practical circumstances, movement of the pilot's steering control (including movement during retraction or extension or after retraction of the landing gear) cannot interfere with the correct retraction or extension of the landing gear.

(c) Under failure conditions the system must comply with CS 25.1309(b) and (c). The arrangement of the system must be such that no single failure will result in a nose-wheel position, which will lead to a Hazardous Effect. Where reliance is placed on nose-wheel steering in showing compliance with CS 25.233, the nose-wheel steering system must be shown to comply with CS 25.1309. (See AMC 25.745(c).)

(d) The design of the attachment for towing the aeroplane on the ground must be such as to preclude damage to the steering system.

(e) Unless the nose-wheel, when lowered, is automatically in the fore-and-aft attitude successful landings must be demonstrated with the nose-wheel initially in all possible off-centre positions.

[Amdt 25/2]

AMC 25.745(a) Nose-wheel steering

ED Decision 2003/2/RM

In a powered nose-wheel steering system the normal supply for steering should continue without interruption in the event of failure of any one power-unit. With the remaining power-units operating at ground idling condition, the power supply should be adequate –

a. To complete an accelerate-stop manoeuvre following a power-unit failure which occurs during take-off, and

b. To complete a landing manoeuvre following a power-unit failure which occurs during take-off or at any later stage of flight.

AMC 25.745(c) Nose-wheel steering

ED Decision 2003/2/RM

1 No failure or disconnection need be assumed in respect of parts of proven integrity e.g. a simple jack or manual selector valve, but slow leakage from pipe joints and fracture of pipes should be considered as probable failures.

2 In assessing where the inadvertent application of steering torque as a result of a single failure would lead to danger, allowance may be made for the pilot's instinctive reaction to the effects of the fault. However, dependent on the urgency and rapidity of warning of the failure given to the pilot, allowance should be made for a reaction time before it is assumed that the pilot takes any corrective action.

PERSONNEL AND CARGO ACCOMMODATIONS

CS 25.771 Pilot compartment

ED Decision 2003/2/RM

(a) Each pilot compartment and its equipment must allow the minimum flight crew (established under CS 25.1523) to perform their duties without unreasonable concentration or fatigue.

(b) The primary controls listed in CS 25.779(a), excluding cables and control rods, must be located with respect to the propellers so that no member of the minimum flight crew (established under CS 25.1523), or part of the controls, lies in the region between the plane of rotation of any inboard propeller and the surface generated by a line passing through the centre of the propeller hub making an angle of 5° forward or aft of the plane of rotation of the propeller.

(c) If provision is made for a second pilot, the aeroplane must be controllable with equal safety from either pilot seat.

(d) The pilot compartment must be constructed so that, when flying in rain or snow, it will not leak in a manner that will distract the crew or harm the structure.

(e) Vibration and noise characteristics of cockpit equipment may not interfere with safe operation of the aeroplane.

CS 25.772 Pilot compartment doors

ED Decision 2003/2/RM

For an aeroplane that has a lockable door installed between the pilot compartment and the passenger compartment: -

(a) For aeroplanes with passenger seating configuration of 20 seats or more, the emergency exit configuration must be designed so that neither crewmembers nor passengers require use of the flight deck door in order to reach the emergency exits provided for them; and

(b) Means must be provided to enable flight-crew members to directly enter the passenger compartment from the pilot compartment if the cockpit door becomes jammed.

(c) There must be an emergency means to enable a crewmember to enter the pilot compartment in the event that the flight crew becomes incapacitated.

CS 25.773 Pilot compartment view

ED Decision 2003/2/RM

(a) *Non-precipitation conditions*. For non-precipitation conditions, the following apply:

(1) Each pilot compartment must be arranged to give the pilots a sufficiently extensive, clear, and undistorted view, to enable them to safely perform any manoeuvres within the operating limitations of the aeroplane, including taxiing, take-off, approach and landing.

(2) Each pilot compartment must be free of glare and reflection that could interfere with the normal duties of the minimum flight crew (established under CS 25.1523). This must be shown in day and night flight tests under non-precipitation conditions.

(b) *Precipitation conditions*. For precipitation conditions, the following apply:

(1) The aeroplane must have a means to maintain a clear portion of the windshield during precipitation conditions, sufficient for both pilots to have a sufficiently extensive view along the flight path in normal flight attitudes of the aeroplane. This means must be designed to function, without continuous attention on the part of the crew, in –

(i) Heavy rain at speeds up to 1·5 V_{SR1}, with lift and drag devices retracted; and

(ii) The icing conditions specified in CS 25.1419 if certification with ice protection provisions is requested. (See AMC 25.773(b)(1)(ii).)

(2) No single failure of the systems used to provide the view required by sub-paragraph (b)(1) of this paragraph must cause the loss of that view by both pilots in the specified precipitation conditions.

(3) The first pilot must have –

(i) A window that is openable under the conditions prescribed in sub-paragraph (b)(1) of this paragraph when the cabin is not pressurised, provides the view specified in that paragraph, and gives sufficient protection from the elements against impairment of the pilot's vision; or

(ii) An alternative means to maintain a clear view under the conditions specified in sub-paragraph (b)(1) of this paragraph, considering the probable damage due to a severe hail encounter.

(4) The openable window specified in sub-paragraph (b)(3) of this paragraph need not be provided if it is shown that an area of the transparent surface will remain clear sufficient for at least one pilot to land the aeroplane safely in the event of -

(i) Any system failure or combination of failures, which is not, Extremely Improbable under the precipitation conditions specified in sub-paragraph (b)(1) of this paragraph.

(ii) An encounter with hail, birds, or insects.

(c) *Internal windshield and window fogging*. The aeroplane must have a means to prevent fogging to the internal portions of the windshield and window panels over an area which would provide the visibility specified in sub-paragraph (a) of this paragraph under all internal and external ambient conditions, including precipitation conditions, in which the aeroplane is intended to be operated.

(d) Fixed markers or other guides must be installed at each pilot station to enable the pilots to position themselves in their seats for an optimum combination of outside visibility and instrument scan. If lighted markers or guides are used they must comply with the requirements specified in CS 25.1381.

AMC 25.773(b)(1)(ii) Pilot compartment view

ED Decision 2003/2/RM

For windshields protected by the application of electrical heat, a nominal heating capacity of 70 W/dm^2 would be adequate.

CS 25.775 Windshields and windows

ED Decision 2003/2/RM

(a) Internal panes must be made of non-splintering material.

(b) Windshield panes directly in front of the pilots in the normal conduct of their duties, and the supporting structures for these panes, must withstand, without penetration, the bird impact conditions specified in CS 25.631.

(c) Unless it can be shown by analysis or tests that the probability of occurrence of a critical windshield fragmentation condition is of a low order, the aeroplane must have a means to minimise the danger to the pilots from flying windshield fragments due to bird impact. This must be shown for each transparent pane in the cockpit that –

(1) Appears in the front view of the aeroplane;

(2) Is inclined 15° or more to the longitudinal axis of the aeroplane; and

(3) Has any part of the pane located where its fragmentation will constitute a hazard to the pilots.

(d) The design of windshields and windows in pressurised aeroplanes must be based on factors peculiar to high altitude operation, including the effects of continuous and cyclic pressurisation loadings, the inherent characteristics of the material used, and the effects of temperatures and temperature differentials. The windshield and window panels must be capable of withstanding the maximum cabin pressure differential loads combined with critical aerodynamic pressure and temperature effects after any single failure in the installation or associated systems. It may be assumed that, after a single failure that is obvious to the flight crew (established under CS 25.1523), the cabin pressure differential is reduced from the maximum, in accordance with appropriate operating limitations, to allow continued safe flight of the aeroplane with a cabin pressure altitude of not more than 4572m (15 000 ft) (see AMC 25.775(d)).

(e) The windshield panels in front of the pilots must be arranged so that, assuming the loss of vision through any one panel, one or more panels remain available for use by a pilot seated at a pilot station to permit continued safe flight and landing.

AMC 25.775(d) Windshields and windows

ED Decision 2003/2/RM

1. PURPOSE. This AMC sets forth an acceptable means, but not the only means, of demonstrating compliance with the provisions of CS-25 pertaining to the certification requirements for windshields, windows, and mounting structure. Guidance information is provided for showing compliance with CS 25.775(d), relating to structural design of windshields and windows for aeroplanes with pressurised cabins.

2. RELATED CS PARAGRAPHS.

CS 25.775	Windshields and windows.
CS 25.365	Pressurised compartment loads.
CS 25.773(b)(3)(ii)	Pilot compartment view.
CS 25.571	Damage-tolerance and fatigue evaluation of structure

3. DEFINITIONS.

a. Annealed glass. Glass that has had the internal stresses reduced to low values by heat treatment to a suitable temperature and controlled cooling.

b. Chemically toughened glass. Annealed glass immersed in a bath of molten salt resulting in an ion exchange between the salt and the glass. The composition of the salt is such that this ion exchange causes the surface of the glass to be distorted (expansion), thus putting the surface in a state of compression.

c. Creep. The change in dimension of a material under load over a period of time, not including the initial instantaneous elastic deformation. The time dependent part of strain resulting from an applied stress.

d. Cross-linking. The setting up of chemical links between molecular chains.

e. Modulus of Rupture (MOR). The maximum tensile or compressive longitudinal stress in a surface fibre of a beam loaded to failure in bending calculated from elastic theory.

f. Mounting. The structure that attaches the panel to the aircraft structure.

g. Notch sensitive. The extent to which the sensitivity of a material to fracture is increased by the presence of a surface non-homogeneity, such as a notch, a sudden change in cross section, a crack, or a scratch. Low notch sensitivity is usually associated with ductile materials, and high notch sensitivity is usually associated with brittle materials.

h. Pane/Ply. The pane/ply is a single sheet of transparent material.

i. Panel. The panel is the complete windshield or window excluding the mounting.

j. Thermally toughened glass. Annealed glass heated to its softening temperature after which the outer surfaces are rapidly cooled in a quenching medium resulting in the outer surface being put into a state of compression with the core material in tension to maintain equilibrium.

k. Toughened glass. Annealed glass placed into a state of compressive residual stress, with the internal bulk in a compensating tensile stress. Toughening may be achieved by either thermal or chemical processes.

4. BACKGROUND. Fail-safe designs have prevented depressurisations in a considerable number of windshield failure incidents. There are few transparent materials for aircraft windshield and window applications, and due to their inherent material characteristics, they are not as structurally versatile as metallic materials. Transparent materials commonly used in the construction of windshields and windows are glass, polymethyl-methacrylate (acrylic), polycarbonate, and interlayer materials. The characteristics of these materials require special engineering solutions for aircraft windshield and window panel designs.

a. Glass. In general, glass has good resistance to scratching and chemical attack, such as wiper action, solvents, and de-icing fluid. Windshield and window panel designs, however, should take into account its other unique properties, which are considerably different from metals.

(1) Glass exhibits no sharp change in physical properties when heated or cooled and has no definite melting point.

(2) Unlike metals, glass is a hard brittle material that does not exhibit plastic deformation.

(3) Glass is much stronger in compression than in tension. Fracture will occur, under any form of loading, when the induced deformation causes the tensile stress to exceed the Modulus of Rupture (MOR).

(4) The strength of glass varies with the rate of loading; the faster the rate of loading the higher the strength, as is the case for bird impact loading. In addition, glass fracture stress for a load of short duration will substantially exceed that for a sustained load.

(5) The strength of glass, whether annealed or toughened, can be reduced by edge and surface damage such as scratches, chips, and gouges. Failure is usually initiated at some point of mechanical damage on the surface. However, thermal or chemical toughening can considerably increase the fracture strength of annealed glass.

(6) Safety factors necessary on glass components. The safety factors necessary for glass components are significantly higher than for other materials used in aircraft construction because of: the loss of strength with duration of load, the variability in strength inherent in glass, and the thickness tolerances and high notch sensitivity.

(7) There are generally two types of toughened glass:

(a) Thermally toughened glass. The surface of annealed glass may be placed in a state of compression by heating the glass to its softening temperature after which the outer surfaces are rapidly cooled in a quenching medium. As mentioned, this results in the outer surface being put into a state of compression with the core material in tension to maintain equilibrium. The surface compressive layer in thermally toughened glass is approximately 18 percent of the total thickness of the glass. There are limitations on the minimum thickness of glass that can be effectively toughened by thermal processing. Very thin glass can not be effectively toughened by these methods. In general, toughening can increase the MOR of a piece of glass by approximately 3.5 to 20 times. Thermally toughened glass has significant stored energy within it. This energy is released to a certain extent when the glass fractures. Generally, the higher the stored energy the smaller particles are on fracture. Since thermal toughening leaves the glass with high compressive stresses in its surfaces, all cutting, grinding, or shaping must be done before toughening.

(b) Chemically toughened glass. Chemically toughening glass is achieved by immersion in a bath of molten salt of controlled composition. During the immersion process larger alkali ions in the salt replace smaller alkali ions in the surface of the glass. As a consequence of this unequal alkali ion exchange process, the structure of the surface of the glass is distorted by putting the surface in a state of compression similar to that of thermally toughened glass. Depending on the original glass composition and the bath processing, chemically toughened glass may have a compressive layer from 0.050 mm (0.002 inches) to over 0.50 mm (0.020 inches) regardless of the total glass thickness. The compression stress of chemically toughened glass can be made much higher than it can using thermal toughening. As the compressive layer in chemically toughened glass is much smaller than in thermally toughened glass, the stored energy within the glass does not cause the same

visibility problems after failure. However, as with thermally toughened glass all cutting, grinding, and shaping must be done prior to toughening.

b. Polymethyl-methacrylate (acrylic). The acrylic materials used for aircraft transparent structural panels are unplasticised methyl-methacrylate based polymers. There are two basic forms of acrylic materials used in aircraft windshield and window panels, as-cast and biaxially stretched (stretched from a cross-linked base material).

(1) As-cast acrylic material: Forming acrylic material to a certain shape by pouring it into a mould and letting it harden without applying external pressure. Although not as notch sensitive as glass, unstretched acrylics have a notch sensitivity. This unplasticised methyl-methacrylate base polymer has good forming characteristics, optical characteristics and outdoor weathering properties.

(2) Biaxially stretched acrylic material: Stretching acrylic material aligns the polymer chains to give a laminar structure parallel to the axis of stretch, which enhances resistance to crazing, reduces crack propagation rates, and improves tensile properties. Stretching acrylic material reduces the materials formability. In addition, stretched acrylics have less notch sensitivity than unstretched acrylics.

(3) Properties. Compared with glass, these acrylics are soft and tough. In general, increasing the temperature causes a decrease in the mechanical properties of the material, increased temperature does not affect acrylic elongation and impact properties.

(4) Crazing. Both basic forms of acrylics used in aircraft transparencies are affected by crazing. Crazing is a network of fine cracks that extend over the surface of the plastic sheet (it is not confined to acrylic materials) and are often difficult to discern. These fine cracks tend to be perpendicular to the surface, very narrow, and are usually less than 0.025mm (.0010 inches) in depth. Crazing is induced by prolonged exposure to surface tensile stresses above a critical level or by exposure to organic fluids and vapours.

(a) Stress crazing may be derived from: residual stresses caused by poor forming practice; residual surface stresses induced by machining, polishing, or gouging; and prolonged loading inducing relatively high tensile stresses at a surface.

(b) Stress crazing has a severe effect on the mechanical properties of acrylics; however, the effects are reduced in stretched materials.

(c) Stress crazing affects the transparency of acrylics. Generally, stretched acrylic panels will be replaced due to loss of transparency from stress crazing before significant structural degradation occurs.

(5) Chemical resistance of acrylic materials. Typically, acrylic materials are resistant to inorganic chemicals and to some organic compounds, such as aliphatic (paraffin) hydrocarbons, hydrogenated aromatic compounds, fats, and oils.

(a) Acrylic materials are attacked and weakened by some organic compounds such as aromatic hydrocarbons (benzene), esters (generally in the form of solvents, and some de-icing fluids), ketones (acetone), and chlorinated hydrocarbons. Some hydraulic fluids are very detrimental to acrylic materials.

(b) Some detrimental compounds can induce crazing; others may dissolve the acrylic or be absorbed in the material. Crazing induced by solvent and other organic compounds has more severe effects on the mechanical properties than stress crazing. Dissolution of the acrylic and chemical absorption into the acrylic degrades the mechanical properties.

c. Polycarbonate. Polycarbonate is an amorphous thermoplastic with a glass transition temperature about 150°C, which shows large strain-to-break and high impact strength properties throughout the normal temperature range experienced by transport aircraft. Polycarbonate not only has significantly greater impact strength properties but also higher static strength properties when compared to acrylic materials.

(1) Polycarbonate exhibits very high deflections under impact conditions, which can result in higher loading into the aircraft structure, compared to glass or acrylic windshield and window panels.

(2) Polycarbonate polymer is very susceptible to degradation by the environment, due to moisture absorption and solvent stress cracking, as well as UV degradation. It is possible to prevent degradation by using good design and production practices and incorporating coatings and other forms of encapsulation. Polycarbonate also suffers from phenomena known as physical aging. This results in the change from ductile properties to brittle properties that occur when polycarbonate is exposed to temperatures between 80°C and 130°C.

(3) Polycarbonate and stretched acrylic fatigue properties are similar to metals when working (design) stresses are used for operating pressure loading design.

d. Interlayer Materials. Interlayer materials are transparent adhesive materials used to laminate glass and plastic structural plies for aircraft applications. Current choices are limited to plasticised polyvinyl butyral (incompatible with polycarbonate), polyurethane, and silicone. The most commonly used are true thermoplastics, but some polyurethanes and all silicones contain some cross-linking.

(1) Interlayer materials are considered to be non-structural because they do not directly support aircraft loads. However, glass windshields are often attached to the airframe structure through metal inserts bonded to the interlayer. For such designs the residual strength of the windshield in a condition where all glass plies have failed may be dependent upon the strength of the interlayer. In addition, the shear coupling effectiveness of the interlayer has a great influence on the stiffness of the laminate.

(2) Most interlayer materials are susceptible to moisture ingress into the laminate and are protected by compatible sealants in aircraft service.

(3) Interlayer materials, like structural plies, have a useful service life that is controlled by the surface degradation and removal of the transparency for optical reasons.

5. INTRODUCTION. The recommended methods for showing compliance with CS 25.775(d) for typical designs of windshields and windows are given in paragraph 7, Test and Analysis. Typical designs of windshields and cockpit side windows are laminated multi-plied constructions, consisting of at least two structural plies, facing plies, adhesive interlayers, protective coatings, embedded electroconductive heater films or wires, and mounting structure. Typically the structural plies are made from thermally or chemically toughened glass, or transparent polymeric materials such as polymethylmethacrylate (acrylic) and polycarbonate. These plies

may be protected from abrasion, mechanical, and environmental damage by use of facing plies and/or protective coatings. The facing and structural plies are laminated together with adhesive interlayer material of poly-vinyl butyral (PVB), polyurethane, or silicone. Cabin window designs are typically multi-paned construction consisting of two structural panes (a main load bearing pane and a fail-safe pane), inner facing panes, protective coatings, and mounting structure. Generally, the two structural panes are made from polymethyl-methacrylate and separated by an air gap. However, there are some cabin window designs that have laminated structural panes. The designs with the structural panes separated by an air gap usually are such that the fail-safe pane is not loaded unless the main pane has failed.

6. GENERAL CONSIDERATIONS FOR DESIGN.

a. Items to be considered in designing the mounting for suitability over the ranges of loading and climatic conditions include but are not limited to:

(1) Deflection of the panes and mounting under pressure,

(2) Deflection of the mounting structure as a result of fuselage deflection,

(3) Differential contraction and expansion between the panes and the mounting,

(4) Deflection of the panel resulting from temperature gradient across the thickness of the panel, and

(5) Long term deformation (creep) particularly of non-metallic parts.

b. Fatigue and stress crazing should be evaluated for assemblies using polymeric structural plies. One way to reduce the occurrence of fatigue and stress crazing is by limiting the maximum working stress level over the complete panel assembly, making due allowance for expected in service deterioration resulting from weathering, minor damage, environmental attack, and the use of chemicals/cleaning fluids. This analysis should be based on:

(1) The appropriate strength of the polymer as declared by the material manufacturer under sustained loading,

(2) The panel assembly maintained at its normal working temperature as given by the windshield/window heating system, if installed, and

(3) The ambient temperature on the outside and the cabin temperature on the inside. The most adverse likely ambient temperature should be covered.

7. TESTS AND ANALYSIS. The windshield and window panels must be capable of withstanding the maximum cabin pressure differential loads combined with critical aerodynamic pressure and temperature effects for intact and single failure conditions in the installation of associated systems. When substantiation is shown by test evidence, the test apparatus should closely simulate the structural behaviour (e.g., deformation under pressure loads) of the aircraft mounting structure up to the ultimate load conditions. Analysis may be used if previous testing can validate it. The effects of the following material characteristics should be evaluated and accounted for in the design and test results: notch sensitivity, fatigue, crazing, aging effects, corrosion (degradation by fluids), temperature, UV degradation, material stability, creep, and the function and working life of the interlayer. An acceptable route for the strength substantiation of a windshield or window panel is set out below.

a. Ultimate Static Strength.

(1) Conduct a detailed structural analysis using an appropriate structural analysis method to identify the highest stressed areas of the windshield or window panel. Subsequently confirm the structural analysis by subjecting a representatively mounted and instrumented windshield or window panel to ultimate load conditions. The panel should be subjected to the most adverse combinations of pressure loading, including the maximum internal pressure, external aerodynamic pressure, temperature effects, and where appropriate, flight loads.

(2) Establish allowable strength values including allowance for material production variability, material characteristics, long term degradation, and environmental effects for each structural ply from relevant coupon or sub-component test evidence. Check the critical design case to ensure that the allowables are not exceeded by the design ultimate stresses.

(3) In lieu of 7.a.(2) above, perform a test above ultimate pressure load to account for material production variability, material characteristics, long term degradation, and environmental effects. In lieu of a rational analysis substantiating the degree of increased loading above ultimate, a factor of 2.0 may be used (ultimate is defined as 1.5 times the pressure load defined in CS 25.365(d)). A separate test fixture may be needed to preclude loading the airframe above ultimate capability.

b. Fatigue. Conventional windshield and window panel materials exhibit good intrinsic fatigue resistance properties, but the variability in fatigue life is greater than that in aircraft quality metals. Thus a conventional cyclic fatigue test, but of extended duration, may be used to cover this variability. Testing at an elevated stress level for one aircraft lifetime could also give the necessary assurance of reliability. These approaches require consideration of the endurance of the metal parts of the mounting structure. Another approach that may be used in lieu of testing is to maintain the maximum working stresses in the windshield and window panel below values at which fatigue will occur. The maximum working stress level over the complete panel assembly should be shown by supporting evidence not to exceed values consistent with the avoidance of fatigue and stress crazing, considering deterioration resulting from weathering, minor damage and scratching in service, and use of cleaner fluids, etc. Fatigue resistance of the mounting structure should be covered separately as part of the fuselage fatigue substantiation.

c. Fail-Safe. Fail-safe strength capability of the windshield and window panels should be demonstrated after any single failure in the installation or associated systems. The demonstration should account for material characteristics and variability in service material degradation, critical temperature effects, maximum cabin differential pressure, and critical external aerodynamic pressure. The requirements of CS 25.571 for the windshield or window panels may be met by showing compliance with the fail-safe criteria in this AMC. Other single failures (besides the windshield and window panels) in the installation or associated systems should also be considered. An acceptable approach for demonstrating compliance is defined by the following method:

(1) Conduct an analysis to establish the critical main pressure bearing ply.

(2) To account for the dynamic effects of a ply failure, test the representatively mounted windshield and window panel by suddenly failing the critical ply under the maximum cabin differential pressure (maximum relief valve setting) combined

with the critical external aerodynamic pressure with critical temperature effects included.

(a) For windshield and window panel failures obvious to the flightcrew, the test pressure may be reduced after initial critical pane failure to account for crew action defined in the flight manual procedures. The failed windshield or window panel should withstand this reduced pressure for the period of time that would be required to complete the flight.

(b) For windshield and window panel failures, which would not be obvious to a flightcrew, the test pressure should be held for a time sufficient to account for the remaining period of flight. During the period of time when the test pressure is held, the effects of creep (if creep could occur) should be considered.

(3) Check the fail-safe stresses in all intact structural plies determined in 7c(2) to ensure that they do not exceed the material allowables developed to account for material production variability, material characteristics, long term degradation, and environmental effects.

(4) In lieu of 7c(3) above, to account for material production variability, material characteristics, long term degradation, and environmental effects, additional fail-safe testing of the windshield and window panel to loads above the fail-safe loads following the procedures defined in 7c(2) above should be conducted. In lieu of a rational analysis substantiating the degree of increased loading, a factor may be used, as shown in the table below. The factored loads should be applied after the failure of the critical ply. A separate test fixture may be needed to preclude loading the airframe above ultimate capability. The panel tested in 7c(2) may be used for this test.

(5) Load Factors (applied after the failure of the critical ply):

Material	Factor
Glass	2.0
Stretched Acrylic	2.0
Cast Acrylic	4.0
Polycarbonate	4.0

(6) Other single failures in the installation or the associated systems as they affect the transparency should also be addressed. Such failures include broken fasteners, cracked mounting components, and malfunctions in windshield heat systems.

CS 25.777 Cockpit controls

ED Decision 2003/2/RM

(a) Each cockpit control must be located to provide convenient operation and to prevent confusion and inadvertent operation.

(b) The direction of movement of cockpit controls must meet the requirements of CS 25.779. Wherever practicable, the sense of motion involved in the operation of other controls must correspond to the sense of the effect of the operation upon the aeroplane or upon the part operated. Controls of a variable nature using a rotary motion must move clockwise from the off position, through an increasing range, to the full on position.

(c) The controls must be located and arranged, with respect to the pilots' seats, so that there is full and unrestricted movement of each control without interference from the cockpit structure or the clothing of the minimum flight crew (established under CS 25.1523) when any member of this flight crew from 1.58 m (5ft 2 inches) to 1·91 m (6ft 3 inches) in height, is seated with the seat belt and shoulder harness (if provided) fastened.

(d) Identical powerplant controls for each engine must be located to prevent confusion as to the engines they control.

(e) Wing-flap controls and other auxiliary lift device controls must be located on top of the pedestal, aft of the throttles, centrally or to the right of the pedestal centre line, and not less than 25 cm (10 inches) aft of the landing gear control.

(f) The landing gear control must be located forward of the throttles and must be operable by each pilot when seated with seat belt and shoulder harness (if provided) fastened.

(g) Control knobs must be shaped in accordance with CS 25.781. In addition, the knobs must be of the same colour and this colour must contrast with the colour of control knobs for other purposes and the surrounding cockpit.

(h) If a flight engineer is required as part of the minimum flight crew (established under CS 25.1523), the aeroplane must have a flight engineer station located and arranged so that the flight-crew members can perform their functions efficiently and without interfering with each other.

CS 25.779 Motion and effect of cockpit controls

ED Decision 2003/2/RM

Cockpit controls must be designed so that they operate in accordance with the following movement and actuation:

(a) Aerodynamic controls –

(1) Primary.

Controls	*Motion and effect*
Aileron	Right (clockwise) for right wing down
Elevator	Rearward for nose up
Rudder	Right pedal forward for nose right

(2) Secondary.

Controls	*Motion and effect*
Flaps (or auxiliary lift devices)	Forward for wing-flaps up; rearward for flaps down
Trim tabs (or equivalent)	Rotate to produce similar rotation of the aeroplane about an axis parallel to the axis of the control

(b) Powerplant and auxiliary controls –

(1) Powerplant.

Controls	Motion and effect
Power or thrust	Forward to increase forward thrust and rearward to increase rearward thrust
Propellers	Forward to increase rpm

(2) Auxiliary.

Controls	Motion and effect
Landing gear	Down to extend

CS 25.781 Cockpit control knob shape

ED Decision 2003/2/RM

Cockpit control knobs must conform to the general shapes (but not necessarily the exact sizes or specific proportions) in the following figure:

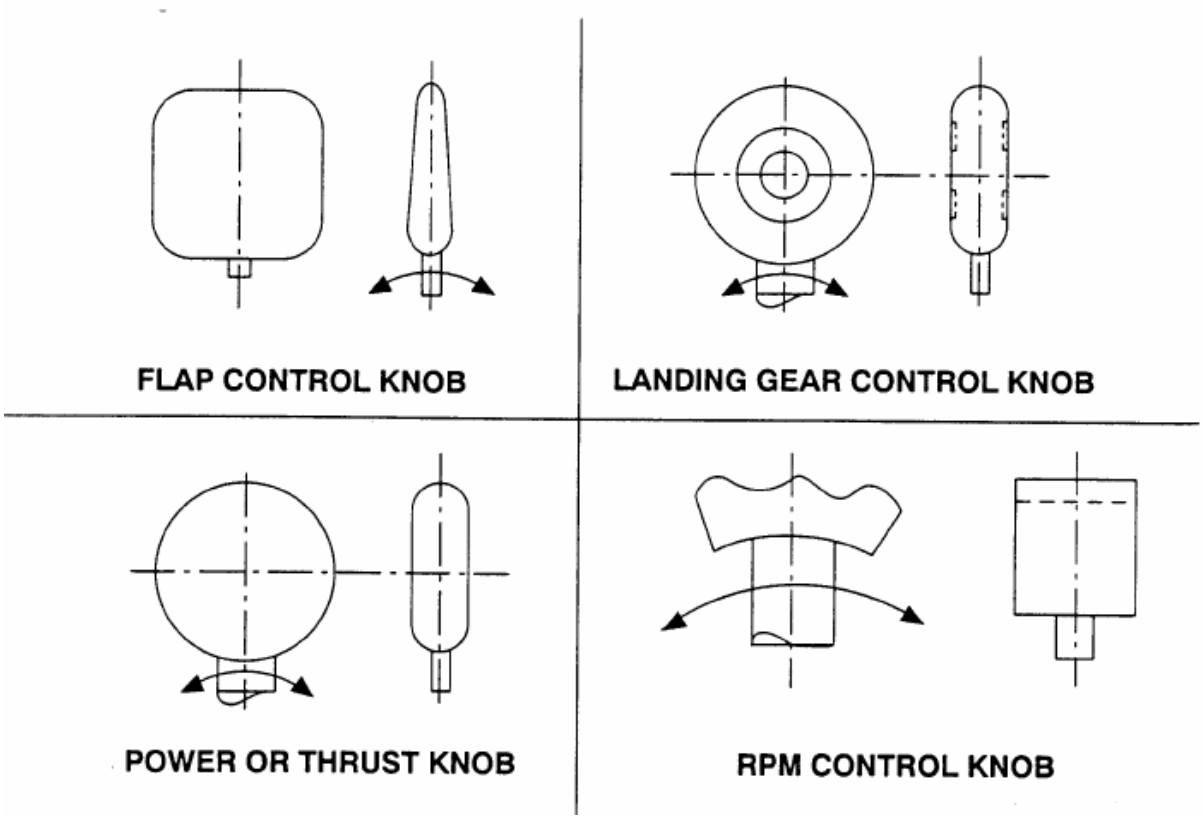

CS 25.783 Doors

ED Decision 2003/2/RM

(a) Each cabin must have at least one easily accessible external door.

(b) There must be a means to lock and safeguard each external door against opening in flight (either inadvertently by persons or as a result of mechanical failure or failure of a single structural

element either during or after closure). Each external door must be openable from both the inside and the outside, even though persons may be crowded against the door on the inside of the aeroplane. Inward opening doors may be used if there are means to prevent occupants from crowding against the door to an extent that would interfere with the opening of the door. The means of opening must be simple and obvious and must be arranged and marked so that it can be readily located and operated, even in darkness. Auxiliary locking devices may be used.

(c) Each external door must be reasonably free from jamming as a result of fuselage deformation in a minor crash.

(d) Each external door must be located where persons using them will not be endangered by the propeller when appropriate operating procedures are used.

(e) There must be provision for direct visual inspection of the locking mechanism to determine if external doors, for which the initial opening movement is not inward (including passenger, crew, service, and cargo doors), are fully closed and locked. The provision must be discernible under operational lighting conditions by appropriate crew members using a flashlight or equivalent lighting source. In addition there must be a visual warning means to signal the appropriate flight-crew members if any external door is not fully closed and locked. The means must be designed such that any failure or combination of failures that would result in an erroneous closed and locked indication is improbable for doors for which the initial opening movement is not inward.

(f) External doors must have provisions to prevent the initiation of pressurisation of the aeroplane to an unsafe level if the door is not fully closed and locked. In addition, it must be shown by safety analysis that inadvertent opening is extremely improbable.

(g) Cargo and service doors not suitable for use as emergency exits need only meet subparagraphs (e) and (f) of this paragraph and be safeguarded against opening in flight as a result of mechanical failure or failure of a single structural element.

(h) Each passenger entry door in the side of the fuselage must qualify as a Type A, Type I, or Type II passenger emergency exit and must meet the requirements of CS 25.807 to 25.813 that apply to that type of passenger emergency exit.

(i) If an integral stair is installed in a passenger entry door that is qualified as a passenger emergency exit, the stair must be designed so that under the following conditions the effectiveness of passenger emergency egress will not be impaired:

(1) The door, integral stair, and operating mechanism have been subjected to the inertia forces specified in CS 25.561(b)(3), acting separately relative to the surrounding structure.

(2) The aeroplane is in the normal ground attitude and in each of the attitudes corresponding to collapse of one or more legs of the landing gear.

(j) All lavatory doors must be designed to preclude anyone from becoming trapped inside the lavatory, and if a locking mechanism is installed, it must be capable of being unlocked from the outside without the aid of special tools.

CS 25.785 Seats, berths, safety belts and harnesses

ED Decision 2003/2/RM

(a) A seat (or berth for a non-ambulant person) must be provided for each occupant who has reached his or her second birthday.

(b) Each seat, berth, safety belt, harness, and adjacent part of the aeroplane at each station designated as occupiable during take-off and landing must be designed so that a person making proper use of these facilities will not suffer serious injury in an emergency landing as a result of the inertia forces specified in CS 25.561 and CS 25.562.

(c) Each seat or berth must be approved.

(d) Each occupant of a seat (see AMC 25.785(d)) that makes more than an 18-degree angle with the vertical plane containing the aeroplane centreline must be protected from head injury by a safety belt and an energy absorbing rest that will support the arms, shoulders, head and spine, or by a safety belt and shoulder harness that will prevent the head from contacting any injurious object. Each occupant of any other seat must be protected from head injury by a safety belt and, as appropriate to the type, location, and angle of facing of each seat, by one or more of the following:

(1) A shoulder harness that will prevent the head from contacting any injurious object.

(2) The elimination of any injurious object within striking radius of the head.

(3) An energy absorbing rest that will support the arms, shoulders, head and spine.

(e) Each berth must be designed so that the forward part has a padded end board, canvas diaphragm, or equivalent means, that can withstand the static load reaction of the occupant when subjected to the forward inertia force specified in CS 25.561. Berths must be free from corners and protuberances likely to cause injury to a person occupying the berth during emergency conditions.

(f) Each seat or berth, and its supporting structure, and each safety belt or harness and its anchorage must be designed for an occupant weight of 77 kg (170 pounds), considering the maximum load factors, inertia forces, and reactions among the occupant, seat, safety belt, and harness for each relevant flight and ground load condition (including the emergency landing conditions prescribed in CS 25.561). In addition –

(1) The structural analysis and testing of the seats, berths, and their supporting structures may be determined by assuming that the critical load in the forward, sideward, downward, upward, and rearward directions (as determined from the prescribed flight, ground, and emergency landing conditions) acts separately or using selected combinations of loads if the required strength in each specified direction is substantiated. The forward load factor need not be applied to safety belts for berths.

(2) Each pilot seat must be designed for the reactions resulting from the application of the pilot forces prescribed in CS 25.395.

(3) For the determination of the strength of the local attachments (see AMC 25.561(c)) of –

(i) Each seat to the structure; and

(ii) Each belt or harness to the seat or structure; a multiplication factor of 1·33 instead of the fitting factor as defined in CS 25.625 should be used for the inertia forces specified in CS 25.561. (For the lateral forces according to CS 25.561(b)(3) 1·33 times 3·0 g should be used.)

(g) Each crewmember seat at a flight-deck station must have a shoulder harness. These seats must meet the strength requirements of sub-paragraph (f) of this paragraph, except that where a seat forms part of the load path, the safety belt or shoulder harness attachments need only be proved to be not less strong than the actual strength of the seat. (See AMC 25.785(g).)

(h) Each seat located in the passenger compartment and designated for use during take-off and landing by a cabin crewmember required by the Operating Rules must be –

(1) Near a required floor level emergency exit, except that another location is acceptable if the emergency egress of passengers would be enhanced with that location. A cabin crewmember seat must be located adjacent to each Type A emergency exit. Other cabin crewmember seats must be evenly distributed among the required floor level emergency exits to the extent feasible.

(2) To the extent possible, without compromising proximity to a required floor level emergency exit, located to provide a direct view of the cabin area for which the cabin crewmember is responsible.

(3) Positioned so that the seat will not interfere with the use of a passageway or exit when the seat is not in use.

(4) Located to minimise the probability that occupants would suffer injury by being struck by items dislodged from service areas, stowage compartments, or service equipment.

(5) Either forward or rearward facing with an energy absorbing rest that is designed to support the arms, shoulders, head and spine.

(6) Equipped with a restraint system consisting of a combined safety belt and shoulder harness unit with a single point release. There must be means to secure each restraint system when not in use to prevent interference with rapid egress in an emergency.

(i) Each safety belt must be equipped with a metal-to-metal latching device.

(j) If the seat backs do not provide a firm handhold, there must be a handgrip or rail along each aisle to enable persons to steady themselves while using the aisles in moderately rough air.

(k) Each projecting object that would injure persons seated or moving about the aeroplane in normal flight must be padded.

(l) Each forward observer's seat required by the operating rules must be shown to be suitable for use in conducting the necessary en-route inspections.

AMC 25.785(d) Seats and safety belts

ED Decision 2003/2/RM

1 Sharp edges or excrescences on the seats or parts of the passenger accommodation which might prove a source of danger not only to the occupants of the seats but particularly to the occupant seated to the rear should be avoided. All surfaces of passenger accommodation and those areas of the seat back lying within the arc of travel of the head of an occupant seated to the rear and restrained by a safety belt should be smooth and of large radius.

2 The radius of the arc of travel, representing the extremity of the occupant's head, should be taken as 71 cm (28 in). This allows for tall occupants and stretch in the safety belt. The centre of the radius of the arc of travel should be taken as 46 cm (18 in) forward and upward of the junction of the seat back and bottom at 35° to the latter (see Figure 1).

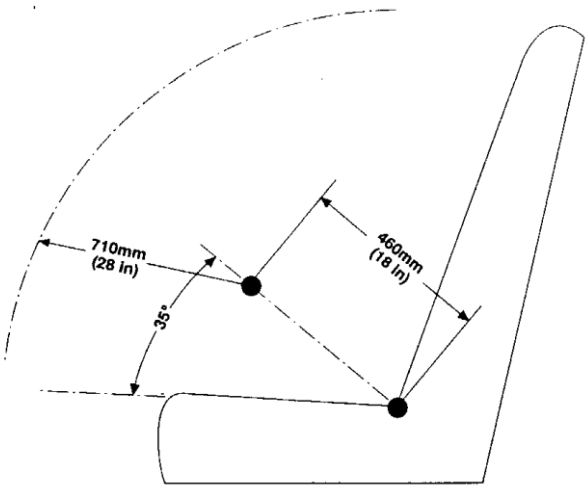

Figure 1

3 If the top of the seat back occurs within the arc of travel of the head, it should be padded to at least 25 mm (1 in) radius with at least 12·5 mm (0·5 in) of firm padding.

4 Any other substantially horizontal members occurring within the areas defined by paragraph 2 should either be padded as recommended in paragraph 3 or should be so arranged that the head will be deflected past them rather than strike them a direct blow. The tops of vertical members occurring within these areas should be so protected as to be at least as safe as horizontal members. No member should occur where it might be struck by the throat.

5 Where practicable, it is recommended that seat backs should be pivoted so as to move forward under emergency alighting acceleration loads so that the occupant of the seat behind only strikes a glancing blow on the seat back.

[Amdt 25/2]

AMC 25.785(g) Seats, berths, safety belts and harnesses

ED Decision 2003/2/RM

Where there is a risk that a safety belt or harness might, when not in use, foul the controls or impede the crew, suitable stowage should be provided, unless it can be shown that the risk can be avoided by the application of suitable crew drills.

CS 25.787 Stowage compartments

ED Decision 2003/2/RM

(a) Each compartment for the stowage of cargo, baggage, carry-on articles and equipment (such as life rafts) and any other stowage compartment must be designed for its placarded maximum weight of contents and for the critical load distribution at the appropriate maximum load factors corresponding to the specified flight and ground load conditions and, where the breaking loose of the contents of such compartments could–

(1) Cause direct injury to occupants;

(2) Penetrate fuel tanks or lines or cause fire or explosion hazard by damage to adjacent systems; or

(3) Nullify any of the escape facilities provided for use after an emergency landing, to the emergency landing conditions of CS 25.561(b)(3).

If the aeroplane has a passenger-seating configuration, excluding pilot seats, of 10 seats or more, each stowage compartment in the passenger cabin, except for under seat and overhead compartments for passenger convenience, must be completely enclosed.

(b) There must be a means to prevent the contents in the compartments from becoming a hazard by shifting, under the loads specified in sub-paragraph (a) of this paragraph. (See AMC 25.787(b))

(c) If cargo compartment lamps are installed, each lamp must be installed so as to prevent contact between lamp bulb and cargo.

AMC 25.787(b) Stowage compartments

ED Decision 2003/2/RM

For stowage compartments in the passenger and crew compartments it must be shown by analysis and/or tests that under the load conditions as specified in CS 25.561(b)(3), the retention items such as doors, swivels, latches etc., are still performing their retention function. In the analysis and/or tests the expected wear and deterioration should be taken into account.

CS 25.789 Retention of items of mass in passenger and crew compartments and galleys

ED Decision 2003/2/RM

(a) Means must be provided to prevent each item of mass (that is part of the aeroplane type design) in a passenger or crew compartment or galley from becoming a hazard by shifting under the appropriate maximum load factors corresponding to the specified flight and ground load conditions, and to the emergency landing conditions of CS 25.561(b).

(b) Each interphone restraint system must be designed so that when subjected to the load factors specified in CS 25.561(b)(3), the interphone will remain in its stowed position.

CS 25.791 Passenger information signs and placards

ED Decision 2003/2/RM

(a) If smoking is to be prohibited, there must be at least one placard so stating that is legible to each person seated in the cabin. If smoking is to be allowed, and if the crew compartment is separated from the passenger compartment, there must be at least one sign notifying when smoking is prohibited. Signs, which notify when smoking is prohibited, must be installed so as to be operable from either pilot's seat and, when illuminated, must be legible under all probable conditions of cabin illumination to each person seated in the cabin.

(b) Signs that notify when seat belts should be fastened and that are installed to comply with the Operating Rules must be installed so as to be operable from either pilot's seat and, when illuminated, must be legible under all probable conditions of cabin illumination to each person seated in the cabin.

(c) A placard must be located on or adjacent to the door of each receptacle used for the disposal of flammable waste materials to indicate that use of the receptacle for disposal of cigarettes, etc., is prohibited.

(d) Lavatories must have 'No Smoking' or 'No Smoking in Lavatory' placards positioned adjacent to each ashtray. The placards must have red letters at least 13 mm (0·5 inches) high on a white background of at least 25 mm (1·0 inches) high. (A No Smoking symbol may be included on the placard.)

(e) Symbols that clearly express the intent of the sign or placard may be used in lieu of letters.

AMC 25.791 Passenger information signs and placards

ED Decision 2003/2/RM

Relevant part of the FAA Advisory Circular 25-17 Transport Airplane Cabin Interiors Crashworthiness Handbook, dated 15.7/91, are accepted by the Agency as providing acceptable means of compliance with CS 25.791.

Note: "relevant parts" means "the part of the AC 25-17 that addresses the applicable FAR/CS-25 paragraph".

CS 25.793 Floor surfaces

ED Decision 2003/2/RM

The floor surface of all areas, which are likely to become wet in service, must have slip resistant properties.

CS 25.795 Security considerations

ED Decision 2003/2/RM

(a) Protection of flightdeck. If a secure flightdeck door is required by operating rules, the door installation must be designed to:

(1) Resist forcible intrusion by unauthorized persons and be capable of withstanding impacts of 300 Joules (221.3 footpounds) at the critical locations on the door, as well as a 1113 Newton (250 pound) constant tensile load on the knob or handle (See AMC 25.795(a)(1)), and

(2) Resist penetration by small arms fire and fragmentation devices by meeting the following projectile definitions and projectile speeds (See AMC 25.795(a)(2)).

(i) Demonstration Projectile #1. A 9 mm full metal jacket, round nose (FMJ RN) bullet with nominal mass of 8.0 g (124 grain) and reference velocity 436 m/s (1,430 ft/s)

(ii) Demonstration Projectile #2. A .44 Magnum, jacketed hollow point (JHP) bullet with nominal mass of 15.6 g (240 grain) and reference velocity 436 m/s (1,430 ft/s)

AMC 25.795 Security considerations

ED Decision 2003/2/RM

Referenced Documentation:

1. FAA memorandum, Subject Information: Certification of strengthened Flight Deck Doors on Transport Category Airplanes, Original release 6 November 2001.

AMC 25.795(a)(1) Flightdeck intrusion resistance

ED Decision 2003/2/RM

Referenced Documentation:

1. Federal Aviation Administration Advisory Circular (AC) 25.795-1, Flightdeck Intrusion Resistance, issue date 10 January 2002.

AMC 25.795(a)(2) Flightdeck penetration resistance

ED Decision 2003/2/RM

Referenced Documentation:

1. Federal Aviation Administration Advisory Circular (AC) 25.795-2, Flightdeck Penetration Resistance, issue date 10 January 2002.
2. Level IIIA of the (US) National Institute of Justice, Ballistic Resistance of Personal Body Armor, NIJ Standard 0101.04, Office of Science and Technology, Washington, D.C. 20531, September 2000.

EMERGENCY PROVISIONS

CS 25.801 Ditching

ED Decision 2003/2/RM

(a) If certification with ditching provisions is requested, the aeroplane must meet the requirements of this paragraph and CS 25.807(e), 25.1411 and 25.1415(a).

(b) Each practicable design measure, compatible with the general characteristics of the aeroplane, must be taken to minimise the probability that in an emergency landing on water, the behaviour of the aeroplane would cause immediate injury to the occupants or would make it impossible for them to escape.

(c) The probable behaviour of the aeroplane in a water landing must be investigated by model tests or by comparison with aeroplanes of similar configuration for which the ditching characteristics are known. Scoops, wing-flaps, projections, and any other factor likely to affect the hydrodynamic characteristics of the aeroplane, must be considered.

(d) It must be shown that, under reasonably probable water conditions, the flotation time and trim of the aeroplane will allow the occupants to leave the aeroplane and enter the life rafts required by CS 25.1415. If compliance with this provision is shown by buoyancy and trim computations, appropriate allowances must be made for probable structural damage and leakage. If the aeroplane has fuel tanks (with fuel jettisoning provisions) that can reasonably be expected to withstand a ditching without leakage, the jettisonable volume of fuel may be considered as buoyancy volume.

(e) Unless the effects of the collapse of external doors and windows are accounted for in the investigation of the probable behaviour of the aeroplane in a water landing (as prescribed in sub-paragraphs (c) and (d) of this paragraph), the external doors and windows must be designed to withstand the probable maximum local pressures.

CS 25.803 Emergency evacuation

ED Decision 2003/2/RM

(a) Each crew and passenger area must have emergency means to allow rapid evacuation in crash landings, with the landing gear extended as well as with the landing gear retracted, considering the possibility of the aeroplane being on fire.

(b) Reserved.

(c) For aeroplanes having a seating capacity of more than 44 passengers, it must be shown that the maximum seating capacity, including the number of crew members required by the operating rules for which certification is requested, can be evacuated from the aeroplane to the ground under simulated emergency conditions within 90 seconds. Compliance with this requirement must be shown by actual demonstration using the test criteria outlined in Appendix J of this CS-25 unless the Agency find that a combination of analysis and testing will provide data equivalent to that which would be obtained by actual demonstration.

AMC 25.803 Emergency evacuation

ED Decision 2003/2/RM

Relevant part of the FAA Advisory Circular 25-17 Transport Airplane Cabin Interiors Crashworthiness Handbook, dated 15/7/91 and AC 25.803-1 Emergency Evacuation Demonstrations, dated 13/11/89 are accepted by the Agency as providing acceptable means of compliance with CS 25.803.

Note: "relevant parts" means "the part of the AC 25-17 that addresses the applicable FAR/CS-25 paragraph".

CS 25.807 Emergency exits

ED Decision 2003/2/RM

(a) *Type*. For the purpose of this CS-25, the types of exits are defined as follows:

(1) *Type I*. This type is a floor level exit with a rectangular opening of not less than 61 cm (24 inches) wide by 1·22 m (48 inches) high, with corner radii not greater than one-third the width of the exit.

(2) *Type II*. This type is a rectangular opening of not less than 51 cm (20 inches) wide by 1.12 m (44 inches) high, with corner radii not greater than one-third the width of the exit. Type II exits must be floor level exits unless located over the wing, in which case they may not have a step-up inside the aeroplane of more than 25 cm (10 inches) nor a step-down outside the aeroplane of more than 43 cm (17inches).

(3) *Type III*. This type is a rectangular opening of not less than 51 cm (20 inches) wide by 91 cm (36 inches) high, with corner radii not greater than one-third the width of the exit, and with a step-up inside the aeroplane of not more than 51 cm (20 inches). If the exit is located over the wing, the step-down outside the aeroplane may not exceed 69 cm (27 inches).

(4) *Type IV*. This type is a rectangular opening of not less than 48 cm (19 inches) wide by 66 cm (26 inches) high, with corner radii not greater than one-third the width of the exit, located over the wing, with a step-up inside the aeroplane of not more than 74 cm (29 inches) and a step-down outside the aeroplane of not more than 91 cm (36 inches).

(5) *Ventral*. This type is an exit from the passenger compartment through the pressure shell and the bottom fuselage skin. The dimensions and physical configuration of this type of exit must allow at least the same rate of egress as a Type I exit with the aeroplane in the normal ground attitude, with landing gear extended.

(6) *Tail cone*. This type is an aft exit from the passenger compartment through the pressure shell and through an openable cone of the fuselage aft of the pressure shell. The means of opening the tail cone must be simple and obvious and must employ a single operation.

(7) *Type A.* This type is a floor level exit with a rectangular opening of not less than 1.07 m (42 inches) wide by 1·83 m (72 inches) high with corner radii not greater than one-sixth of the width of the exit.

(b) *Step down distance*. Step down distance, as used in this paragraph, means the actual distance between the bottom of the required opening and a usable foot hold, extending out from the fuselage, that is large enough to be effective without searching by sight or feel.

(c) *Over-sized exits*. Openings larger than those specified in this paragraph, whether or not of rectangular shape, may be used if the specified rectangular opening can be inscribed within the opening and the base of the inscribed rectangular opening meets the specified step-up and step-down heights.

(d) *Passenger emergency exits.* (See AMC 25.807(d). Except as provided in sub-paragraphs (d)(3) to (7) of this paragraph, the minimum number and type of passenger emergency exits is as follows:

(1) For passenger seating configurations of 1 to 299 seats –

Passenger seating configuration (crew member seats not included)	Emergency exits for each side of the fuselage			
	Type I	Type II	Type III	Type IV
1 to 9				1
10 to 19			1	
20 to 39		1	1	
40 to 79	1		1	
80 to 109	1		2	
110 to 139	2		1	
140 to 179	2		2	

Additional exits are required for passenger seating configurations greater than 179 seats in accordance with the following table:

Additional emergency exits (each side of fuselage)	Increase in passenger seating configuration allowed
Type A	110
Type I	45
Type II	40
Type III	35

(2) For passenger seating configurations greater than 299 seats, each emergency exit in the side of the fuselage must be either a Type A or a Type I. A passenger seating configuration of 110 seats is allowed for each pair of Type A exits and a passenger seating configuration of 45 seats is allowed for each pair of Type I exits.

(3) If a passenger ventral or tail cone exit is installed and that exit provides at least the same rate of egress as a Type III exit with the aeroplane in the most adverse exit opening condition that would result from the collapse of one or more legs of the landing gear, an increase in the passenger seating configuration beyond the limits specified in sub-paragraph (d)(1) or (2) of this paragraph may be allowed as follows:

(i) For a ventral exit, 12 additional passenger seats.

(ii) For a tail cone exit incorporating a floor level opening of not less than 51 cm (20 inches) wide by 1·52 m (60 inches) high, with corner radii not greater than one-third the width of the exit, in the pressure shell and incorporating an approved assist means in accordance with CS 25.809(h), 25 additional passenger seats.

(iii) For a tail cone exit incorporating an opening in the pressure shell which is at least equivalent to a Type III emergency exit with respect to dimensions, step-up and step-down distance, and with the top of the opening not less than 1.42 m (56 inches) from the passenger compartment floor, 15 additional passenger seats.

(4) For aeroplanes on which the vertical location of the wing does not allow the installation of over-wing exits, an exit of at least the dimensions of a Type III exit must be installed instead of each Type IV exit required by sub-paragraph (1) of this paragraph.

(5) An alternate emergency exit configuration may be approved in lieu of that specified in sub-paragraph (d)(1) or (2) of this paragraph provided the overall evacuation capability is shown to be equal to or greater than that of the specified emergency exit configuration.

(6) The following must also meet the applicable emergency exit requirements of CS 25.809 to 25.813:

(i) Each emergency exit in the passenger compartment in excess of the minimum number of required emergency exits.

(ii) Any other floor level door or exit that is accessible from the passenger compartment and is as large or larger than a Type II exit, but less than 1·17 m (46 inches) wide.

(iii) Any other passenger ventral or tail cone exit.

(7) For an aeroplane that is required to have more than one passenger emergency exit for each side of the fuselage, no passenger emergency exit must be more than 18·3 m (60 feet) from any adjacent passenger emergency exit on the same side of the same deck of the fuselage, as measured parallel to the aeroplane's longitudinal axis between the nearest exit edges.

(e) *Ditching emergency exits for passengers.* Ditching emergency exits must be provided in accordance with the following requirements whether or not certification with ditching provisions is requested:

(1) For aeroplanes that have a passenger seating configuration of nine seats or less, excluding pilots seats, one exit above the waterline in each side of the aeroplane, meeting at least the dimensions of a Type IV exit.

(2) For aeroplanes that have a passenger seating configuration of 10 seats or more, excluding pilots seats, one exit above the waterline in a side of the aeroplane, meeting at least the dimensions of a Type III exit for each unit (or part of a unit) of 35 passenger seats, but no less than two such exits in the passenger cabin, with one on each side of the aeroplane. The passenger seat/exit ratio may be increased through the use of larger exits, or other means, provided it is shown that the evacuation capability during ditching has been improved accordingly.

(3) If it is impractical to locate side exits above the waterline, the side exits must be replaced by an equal number of readily accessible overhead hatches of not less than the dimensions of a Type III exit, except that for aeroplanes with a passenger configuration of 35 seats or less, excluding pilots seats, the two required Type III side exits need be replaced by only one overhead hatch.

(f) *Flight crew emergency exits.* For aeroplanes in which the proximity of passenger emergency exits to the flight crew area does not offer a convenient and readily accessible means of evacuation of the flight crew, and for all aeroplanes having a passenger seating capacity greater than 20, flight crew exits must be located in the flight crew area. Such exits must be of sufficient size and so located as to permit rapid evacuation by the crew. One exit must be provided on each side of the aeroplane; or, alternatively, a top hatch must be provided. Each exit must encompass an unobstructed rectangular opening of at least 48 by 51 cm (19 by 20 inches) unless satisfactory exit utility can be demonstrated by a typical crewmember.

AMC 25.807 and 25.813 Emergency exit access

ED Decision 2003/2/RM

The term 'unobstructed' should be interpreted as referring to the space between the adjacent wall(s) and/or seat(s), the seatback(s) being in the most adverse position, in vertical projection from floor level to at least the prescribed minimum height of the exit.

AMC 25.807 Emergency lighting

ED Decision 2003/2/RM

Relevant part of the FAA Advisory Circular 25-17 Transport Airplane Cabin Interiors Crashworthiness Handbook, dated 15/7/91 and AC 25.812-2 Floor Proximity Emergency Escape Path Marking Systems Incorporating Photoluminescent Elements, dated 24/7/97 are accepted by the Agency as providing acceptable means of compliance with CS 25.812.

Note: "relevant parts" means "the part of the AC 25-17 that addresses the applicable FAR/CS-25 paragraph".

AMC 25.807(d) Passenger emergency exits

ED Decision 2003/2/RM

The optimum fore and aft location of Types I, II and III exits should be agreed between the applicant and the Agency bearing in mind the relevant considerations, including –

a. The varying likelihood of damage to different parts of the fuselage in emergency alighting conditions, and

b. The need to avoid the passengers having to evacuate the aeroplane where dangerous conditions (spilt fuel, hot engine parts, etc.) may exist.

CS 25.809 Emergency exit arrangement

ED Decision 2003/2/RM

(a) Each emergency exit, including a flight crew emergency exit, must be a movable door or hatch in the external walls of the fuselage, allowing unobstructed opening to the outside.

(b) Each emergency exit must be openable from the inside and the outside except that sliding window emergency exits in the flight crew area need not be openable from the outside if other approved exits are convenient and readily accessible to the flight crew area. Each emergency exit must be capable of being opened, when there is no fuselage deformation –

(1) With the aeroplane in the normal ground attitude and in each of the attitudes corresponding to collapse of one or more legs of the landing gear; and

(2) Within 10 seconds measured from the time when the opening means is actuated to the time when the exit is fully opened.

(c) The means of opening emergency exits must be simple and obvious and may not require exceptional effort. Internal exit opening means involving sequence operations (such as operation of two handles or latches or the release of safety catches) may be used for flight crew emergency exits if it can be reasonably established that these means are simple and obvious to crewmembers trained in their use.

(d) If a single power-boost or single power-operated system is the primary system for operating more than one exit in an emergency, each exit must be capable of meeting the requirements of

sub-paragraph (b) of this paragraph in the event of failure of the primary system. Manual operation of the exit (after failure of the primary system) is acceptable.

(e) Each emergency exit must be shown by tests, or by a combination of analysis and tests, to meet the requirements of sub-paragraphs (b) and (c) of this paragraph.

(f) There must be a means to lock each emergency exit and to safeguard against its opening in flight, either inadvertently by persons or as a result of mechanical failure. In addition, there must be a means for direct visual inspection of the locking mechanism by crewmembers to determine that each emergency exit, for which the initial opening movement is outward, is fully locked.

(g) There must be provisions to minimise the probability of jamming of the emergency exits resulting from fuselage deformation in a minor crash landing.

CS 25.810 Emergency egress assist means and escape routes

ED Decision 2003/2/RM

(a) Each non-over-wing landplane emergency exit more than 1.8 m (6 feet) from the ground with the aeroplane on the ground and the landing gear extended and each non-over-wing Type A exit must have an approved means to assist the occupants in descending to the ground.

(1) The assisting means for each passenger emergency exit must be a selfsupporting slide or equivalent; and, in the case of a Type A exit, it must be capable of carrying simultaneously two parallel lines of evacuees. In addition, the assisting means must be designed to meet the following requirements.

(i) It must be automatically deployed and deployment must begin during the interval between the time the exit opening means is actuated from inside the aeroplane and the time the exit is fully opened. However, each passenger emergency exit which is also a passenger entrance door or a service door must be provided with means to prevent deployment of the assisting means when it is opened from either the inside or the outside under non-emergency conditions for normal use.

(ii) It must be automatically erected within 10 seconds after deployment is begun.

(iii) It must be of such length after full deployment that the lower end is selfsupporting on the ground and provides safe evacuation of occupants to the ground after collapse of one or more legs of the landing gear.

(iv) It must have the capability, in 46 km/hr (25-knot) winds directed from the most critical angle, to deploy and, with the assistance of only one person, to remain usable after full deployment to evacuate occupants safely to the ground.

(v) For each system installation (mock-up or aeroplane installed), five consecutive deployment and inflation tests must be conducted (per exit) without failure, and at least three tests of each such five-test series must be conducted using a single representative sample of the device. The sample devices must be deployed and inflated by the system's primary means after being subjected to the inertia forces specified in CS 25.561(b). If any part of the system fails or does not function properly during the required tests, the cause of the failure or malfunction must be corrected by positive means and after that, the full series of five consecutive deployment and inflation tests must be conducted without failure.

(2) The assisting means for flight crew emergency exits may be a rope or any other means demonstrated to be suitable for the purpose. If the assisting means is a rope, or an approved device equivalent to a rope, it must be–

(i) Attached to the fuselage structure at or above the top of the emergency exit opening, or, for a device at a pilot's emergency exit window, at another approved location if the stowed device, or its attachment, would reduce the pilot's view in flight.

(ii) Able (with its attachment) to withstand a 1779 N (400-lbf) static load.

(b) Assist means from the cabin to the wing are required for each Type A exit located above the wing and having a step-down unless the exit without an assist means can be shown to have a rate of passenger egress at least equal to that of the same type of non-over-wing exit. If an assist means is required, it must be automatically deployed and automatically erected, concurrent with the opening of the exit and self-supporting within 10 seconds.

(c) An escape route must be established from each over-wing emergency exit, and (except for flap surfaces suitable as slides) covered with a slip resistant surface. Except where a means for channelling the flow of evacuees is provided –

(1) The escape route must be at least 1·07 m (42 inches) wide at Type A passenger emergency exits and must be at least 61 cm (2 feet) wide at all other passenger emergency exits, and

(2) The escape route surface must have a reflectance of at least 80%, and must be defined by markings with a surface-to-marking contrast ratio of at least 5:1. (See AMC 25.810(c)(2).)

(d) If the place on the aeroplane structure at which the escape route required in sub-paragraph (c) of this paragraph terminates, is more than 1·8 m (6 feet) from the ground with the aeroplane on the ground and the landing gear extended, means to reach the ground must be provided to assist evacuees who have used the escape route. If the escape route is over a flap, the height of the terminal edge must be measured with the flap in the take-off or landing position, whichever is higher from the ground. The assisting means must be usable and self-supporting with one or more landing gear legs collapsed and under a 46 km/hr (25-knot) wind directed from the most critical angle. The assisting means provided for each escape route leading from a Type A emergency exit must be capable of carrying simultaneously two parallel lines of evacuees. For other than Type A exits, the assist means must be capable of carrying simultaneously as many parallel lines of evacuees as there are required escape routes.

AMC 25.810(c)(2) Emergency Evacuation

ED Decision 2003/2/RM

Acceptable methods of measurement of reflectance are given in AC20-38A and AC20-47, published by the Federal Aviation Administration.

CS 25.811 Emergency exit marking

ED Decision 2003/2/RM

(a) Each passenger emergency exit, its means of access, and its means of opening must be conspicuously marked.

(b) The identity and location of each passenger emergency exit must be recognisable from a distance equal to the width of the cabin.

(c) Means must be provided to assist the occupants in locating the exits in conditions of dense smoke.

(d) The location of each passenger emergency exit must be indicated by a sign visible to occupants approaching along the main passenger aisle (or aisles). There must be –

(1) A passenger emergency exit locator sign above the aisle (or aisles) near each passenger emergency exit, or at another overhead location if it is more practical because of low headroom, except that one sign may serve more than one exit if each exit can be seen readily from the sign;

(2) A passenger emergency exit marking sign next to each passenger emergency exit, except that one sign may serve two such exits if they both can be seen readily from the sign; and

(3) A sign on each bulkhead or divider that prevents fore and aft vision along the passenger cabin to indicate emergency exits beyond and obscured by the bulkhead or divider, except that if this is not possible the sign may be placed at another appropriate location.

(e) The location of the operating handle and instructions for opening exits from the inside of the aeroplane must be shown in the following manner:

(1) Each passenger emergency exit must have, on or near the exit, a marking that is readable from a distance of 76 cm (30 inches).

(2) Each passenger emergency exit operating handle and the cover removal instructions, if the operating handle is covered, must –

(i) Be self-illuminated with an initial brightness of at least 0.51 candela/m^2 (160 microlamberts), or

(ii) Be conspicuously located and well illuminated by the emergency lighting even in conditions of occupant crowding at the exit.

(3) Reserved

(4) All Type II and larger passenger emergency exits with a locking mechanism released by motion of a handle, must be marked by a red arrow with a shaft at least 19 mm (0.75 inches) wide, adjacent to the handle, that indicates the full extent and direction of the unlocking motion required. The word OPEN must be horizontally situated adjacent to the arrowhead and must be in red capital letters at least 25 mm (1 inch) high. The arrow and word OPEN must be located on a background, which provides adequate contrast. (See AMC 25.811(e)(4).)

(f) Each emergency exit that is required to be openable from the outside, and its means of opening, must be marked on the outside of the aeroplane. In addition, the following apply:

(1) The outside marking for each passenger emergency exit in the side of the fuselage must include a 51 mm (2 inch) coloured band outlining the exit.

(2) Each outside marking including the band must have colour contrast to be readily distinguishable from the surrounding fuselage surface. The contrast must be such that if the reflectance of the darker colour is 15% or less, the reflectance of the lighter colour must be at least 45%. 'Reflectance' is the ratio of the luminous flux reflected by a body to the luminous flux it receives. When the reflectance of the darker colour is greater than 15%, at least a 30% difference between its reflectance and the reflectance of the lighter colour must be provided.

(3) In the case of exits other than those in the side of the fuselage, such as ventral or tail cone exits, the external means of opening, including instructions if applicable, must be conspicuously marked in red, or bright chrome yellow if the background colour is such that red is inconspicuous. When the opening means is located on only one side of the fuselage, a conspicuous marking to that effect must be provided on the other side.

(g) Each sign required by sub-paragraph (d) of this paragraph may use the word 'exit' in its legend in place of the term 'emergency exit'.

AMC 25.811(e)(4) Emergency exit marking

ED Decision 2003/2/RM

The indicating markings for all Type II and larger passenger emergency exit unlocking handle motions should conform to the general shapes and dimensions indicated by Figures 1 and 2.

NOTE: As far as is practicable the markings should be located to avoid obscuring viewing windows located on or alongside the exits, or coincidence with any other required marking or safety feature.

EXAMPLE MARKING FOR INDICATION OF LINEAR OPENING MOTION

Where practical and unambiguous arrow point and base of arrow shaft to be within ±25 mm (1 inch) of fully unlocked and fully locked positions respectively

DIMENSIONS

A = 19 mm (0·75") minimum

B = 2 x A

C = B (recommended)

D = Indicative of the full extent of handle travel (each installation to be individually assessed)

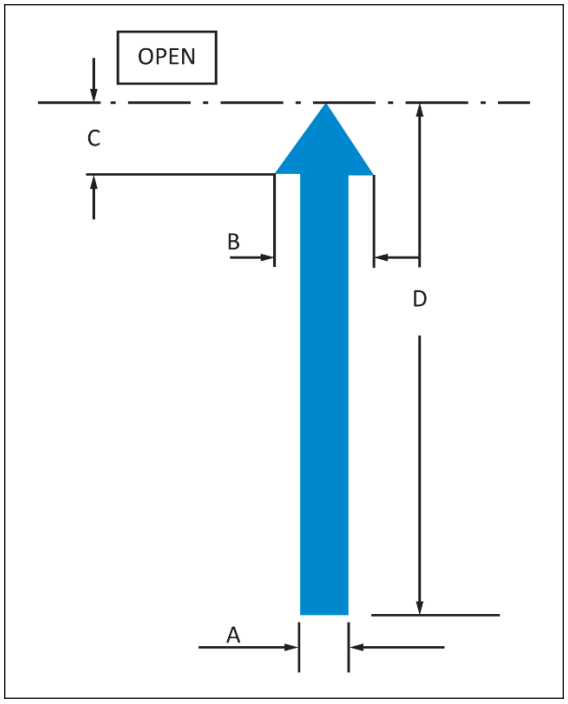

FIGURE 1

EXAMPLE MARKING FOR INDICATION OF ROTARY OPENING MOTION

Arrow point and base of arrow shaft to be within 25 mm (1 inch) of fully unlocked and fully locked positions respectively

DIMENSIONS

A = 19 mm (0·75") minimum

B = 2 x A

C = B (recommended)

D = Full extent of handle centreline travel

E = Three quarters of handle length (where practicable)

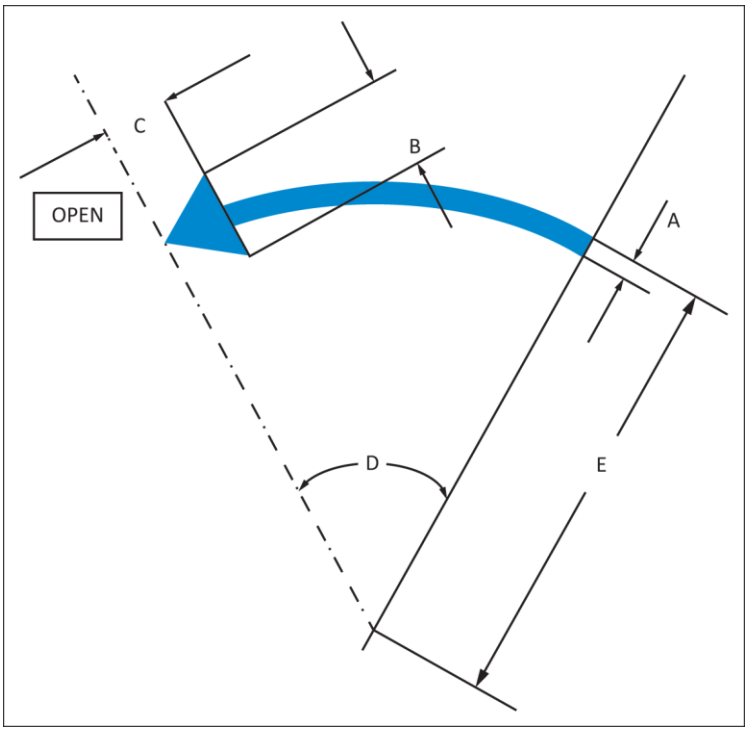

FIGURE 2

CS 25.812 Emergency lighting

ED Decision 2003/2/RM

(a) An emergency lighting system, independent of the main lighting system, must be installed. However, the sources of general cabin illumination may be common to both the emergency and the main lighting systems if the power supply to the emergency lighting system is independent of the power supply to the main lighting system. The emergency lighting system must include -

(1) Illuminated emergency exit marking and locating signs, sources of general cabin illumination, interior lighting in emergency exit areas, and floor proximity escape path marking.

(2) Exterior emergency lighting.

(b) Emergency exit signs –

(1) For aeroplanes that have a passenger-seating configuration, excluding pilot seats, of 10 seats or more must meet the following requirements:

(i) Each passenger emergency exit locator sign required by CS 25.811(d)(1) and each passenger emergency exit marking sign required by CS 25.811(d)(2) must have red letters at least 38 mm (1·5 inches) high on an illuminated white background, and must have an area of at least 135 cm^2 (21 square inches) excluding the letters. The lighted background-toletter contrast must be at least 10:1. The letter height to stroke-width ratio may not be more than 7:1 nor less than 6:1. These signs must be internally electrically illuminated with a background brightness of at least 86 candela/m^2 (25 foot lamberts) and a high-to-low background contrast no greater than 3:1.

(ii) Each passenger emergency exit sign required by CS 25.811(d)(3) must have red letters at least 38 mm (1·5 inches) high on a white background having an area of at least 135 cm^2 (21 square inches) excluding the letters. These signs must be internally electrically illuminated or selfilluminated by other than electrical means and must have an initial brightness of at least 1.27 candela/m^2 (400 microlamberts). The colours may be reversed in the case of a sign that is self-illuminated by other than electrical means.

(2) For aeroplanes that have a passenger seating configuration, excluding pilot seats, of 9 seats or less, that are required by CS 25.811(d)(1), (2), and (3) must have red letters at least 25 mm (1 inch) high on a white background at least 51 mm (2 inches) high. These signs may be internally electrically illuminated, or self-illuminated by other than electrical means, with an initial brightness of at least 0.51 candela/m^2 (160 microlamberts). The colours may be reversed in the case of a sign that is self-illuminated by other than electrical means.

(c) General illumination in the passenger cabin must be provided so that when measured along the centreline of main passenger aisle(s), and cross aisle(s) between main aisles, at seat armrest height and at 1.02 m (40-inch) intervals, the average illumination is not less than 0.5 lux (0.05 foot candle) and the illumination at each 1.02 m (40-inch) interval is not less than 0.1 lux (0.01 foot candle). A main passenger aisle(s) is considered to extend along the fuselage from the most forward passenger emergency exit or cabin occupant seat, whichever is farther forward, to the most rearward passenger emergency exit or cabin occupant seat, whichever is farther aft.

(d) The floor of the passageway leading to each floor-level passenger emergency exit, between the main aisles and the exit openings, must be provided with illumination that is not less than 0.2 lux (0.02 foot candle) measured along a line that is within 15 cm (6 inches) of and parallel to the floor and is centred on the passenger evacuation path.

(e) Floor proximity emergency escape path marking must provide emergency evacuation guidance for passengers when all sources of illumination more than 1.2 m (4 ft) above the cabin aisle floor are totally obscured. In the dark of the night, the floor proximity emergency escape path marking must enable each passenger to –

(1) After leaving the passenger seat, visually identify the emergency escape path along the cabin aisle floor to the first exits or pair of exits forward and aft of the seat; and

(2) Readily identify each exit from the emergency escape path by reference only to markings and visual features not more than 1.2 m (4 ft) above the cabin floor.

(f) Except for sub-systems provided in accordance with sub-paragraph (h) of this paragraph that serve no more than one assist means, are independent of the aeroplane's main emergency lighting system, and are automatically activated when the assist means is erected, the emergency lighting system must be designed as follows:

(1) The lights must be operable manually from the flight crew station and from a point in the passenger compartment that is readily accessible to a normal cabin crewmember seat.

(2) There must be a flight crew warning light, which illuminates when power is on in the aeroplane and the emergency lighting control device is not armed.

(3) The cockpit control device must have an 'on', 'off' and 'armed' position so that when armed in the cockpit or turned on at either the cockpit or cabin crew member station the lights will either light or remain lighted upon interruption (except an interruption caused by a transverse vertical separation of the fuselage during crash landing) of the aeroplane's normal electric power. There must be a means to safeguard against inadvertent operation of the control device from the 'armed' or 'on' positions.

(g) Exterior emergency lighting must be provided as follows:

(1) At each overwing emergency exit the illumination must be –

(i) Not less than 0.3 lux (0.03 foot candle) (measured normal to the direction of the incident light) on a 0.186 m^2 (two-square-foot) area where an evacuee is likely to make his first step outside the cabin;

(ii) Not less than 0.5 lux (0.05 foot candle) (measured normal to the direction of the incident light) along the 30% of the slip-resistant portion of the escape route required in CS 25.810(c) that is farthest from the exit for the minimum required width of the escape route; and

(iii) Not less than 0.3 lux (0.03 foot candle) on the ground surface with the landing gear extended (measured normal to the direction of the incident light) where an evacuee using the established escape route would normally make first contact with the ground.

(2) At each non-overwing emergency exit not required by CS 25.809(f) to have descent assist means the illumination must be not less than 0.3 lux (0.03 foot candle) (measured normal to the direction of the incident light) on the ground surface with the landing gear extended where an evacuee is likely to make his first contact with the ground outside the cabin.

(h) The means required in CS 25.810(a)(1) and (d) to assist the occupants in descending to the ground must be illuminated so that the erected assist means is visible from the aeroplane. In addition –

(1) If the assist means is illuminated by exterior emergency lighting, it must provide illumination of not less than 0.3 lux (0.03 foot candle) (measured normal to the direction of the incident light) at the ground end of the erected assist means where an evacuee using the established escape route would normally make first contact with the ground, with the aeroplane in each of the attitudes corresponding to the collapse of one or more legs of the landing gear.

(2) If the emergency lighting sub-system illuminating the assist means serves no other assist means, is independent of the aeroplane's main emergency lighting system, and is automatically activated when the assist means is erected, the lighting provisions –

(i) May not be adversely affected by stowage; and

(ii) Must provide illumination of not less than 0.3 lux (0.03 foot candle) (measured normal to the direction of the incident light) at the ground end of the erected assist means where an evacuee would normally make first contact with the ground, with the aeroplane in each of the attitudes corresponding to the collapse of one or more legs of the landing gear.

(i) The energy supply to each emergency lighting unit must provide the required level of illumination for at least 10 minutes at the critical ambient conditions after emergency landing.

(j) If storage batteries are used as the energy supply for the emergency lighting system, they may be recharged from the aeroplane's main electric power system: *Provided*, that the charging circuit is designed to preclude inadvertent battery discharge into charging circuit faults.

(k) Components of the emergency lighting system, including batteries, wiring relays, lamps, and switches must be capable of normal operation after having been subjected to the inertia forces listed in CS 25.561(b).

(l) The emergency lighting system must be designed so that after any single transverse vertical separation of the fuselage during crash landing –

(1) Not more than 25% of all electrically illuminated emergency lights required by this paragraph are rendered inoperative, in addition to the lights that are directly damaged by the separation;

(2) Each electrically illuminated exit sign required under CS 25.811(d)(2) remains operative exclusive of those that are directly damaged by the separation; and

(3) At least one required exterior emergency light for each side of the aeroplane remains operative exclusive of those that are directly damaged by the separation.

AMC 25.812 Emergency lighting

ED Decision 2003/2/RM

Relevant parts of FAA Advisory Circular 25-17 Transport Airplane Cabin Interiors Crashworthiness Handbook, dated 15/7/91 and AC 25.812-2 Floor Proximity Emergency Escape Path Marking Systems Incorporating Photoluminescent Elements, dated 24/7/97 are accepted by the Agency as providing acceptable means of compliance with CS 25.812.

Note: "relevant parts" means " the part of the AC 25-17 that addresses the applicable FAR/CS-25 paragraph".

CS 25.813 Emergency exit access

ED Decision 2003/2/RM

Each required emergency exit must be accessible to the passengers and located where it will afford an effective means of evacuation. Emergency exit distribution must be as uniform as practical, taking passenger distribution into account; however, the size and location of exits on both sides of the cabin need not be symmetrical. If only one floor level exit per side is prescribed, and the aeroplane does not have a tail cone or ventral emergency exit, the floor level exit must be in the rearward part of the passenger compartment, unless another location affords a more effective means of passenger evacuation. Where more than one floor level exit per side is prescribed, at least one floor level exit per side must be located near each end of the cabin, except that this provision does not apply to combination cargo/passenger configuration. In addition –

(a) There must be a passageway leading from each main aisle to each Type I, Type II, or Type A emergency exit and between individual passenger areas. If two or more main aisles are provided, there must be a cross aisle leading directly to each passageway between the exit and the nearest main aisle. Each passageway leading to a Type A exit must be unobstructed and at least 91 cm (36 inches) wide. Other passageways and cross aisles must be unobstructed and at least 51 cm (20 inches) wide. Unless there are two or more main aisles, each Type A exit must be located so that there is passenger flow along the main aisle to that exit from both the forward and aft directions.

(b) Adequate space to allow crew-member(s) to assist in the evacuation of passengers must be provided as follows:

(1) The assist space must not reduce the unobstructed width of the passageway below that required for the exit.

(2) For each Type A exit, assist space must be provided at each side of the exit regardless of whether the exit is covered by CS 25.810(a).

(3) For any other type exit that is covered by CS 25.810(a), space must at least be provided at one side of the passageway.

(c) There must be access from each aisle to each Type III or Type IV exit, and –

(1) For aeroplanes that have a passenger seating configuration, excluding pilot's seats, of 20 or more, the projected opening of the exit provided may not be obstructed and there must be no interference in opening the exit by seats, berths, or other protrusions (including seatbacks in any position) for a distance from that exit not less than the width of the narrowest passenger seat installed on the aeroplane.

(2) For aeroplanes that have a passenger seating configuration, excluding pilot's seats, of 19 or less, there may be minor obstructions in this region, if there are compensating factors to maintain the effectiveness of the exit.

(d) If it is necessary to pass through a passageway between passenger compartments to reach any required emergency exit from any seat in the passenger cabin, the passageway must be unobstructed. However, curtains may be used if they allow free entry through the passageway.

(e) No door may be installed in any partition between passenger compartments.

(f) If it is necessary to pass through a doorway separating the passenger cabin from other areas to reach any required emergency exit from any passenger seat, the door must have a means to latch it in open position. The latching means must be able to withstand the loads imposed upon it when the door is subjected to the ultimate inertia forces, relative to the surrounding structure, listed in CS 25.561(b).

CS 25.815 Width of aisle

ED Decision 2003/2/RM

The passenger aisle width at any point between seats must equal or exceed the values in the following table:

Passenger seating capacity	Minimum passenger aisle width (cm (inches))	
	Less than 64 cm (25 inches) from floor	64 cm (25 inches) and more from floor
10 or less	30 (12)*	38 (15)
11 to 19	30 (12)	51 (20)
20 or more	38 (15)	51 (20)

* A narrower width not less than 23 cm (9 inches) may be approved when substantiated by tests found necessary by the Agency.

AMC 25.815 Width of aisle

ED Decision 2003/2/RM

Relevant part of the FAA Advisory Circular 25-17 Transport Airplane Cabin Interiors Crashworthiness Handbook, dated 15/7/91, are accepted by the Agency as providing acceptable means of compliance with CS 25.815.

Note: "relevant parts" means "the part of the AC 25-17 that addresses the applicable FAR/CS-25 paragraph".

CS 25.817 Maximum number of seats abreast

ED Decision 2003/2/RM

On aeroplanes having only one passenger aisle, no more than 3 seats abreast may be placed on each side of the aisle in any one row.

CS 25.819 Lower deck service compartments (including galleys)

ED Decision 2003/2/RM

For aeroplanes with a service compartment located below the main deck, which may be occupied during the taxi or flight but not during take-off or landing, the following apply:

(a) There must be at least two emergency evacuation routes, one at each end of each lower deck service compartment or two having sufficient separation within each compartment, which could be used by each occupant of the lower deck service compartment to rapidly evacuate to the main deck under normal and emergency lighting conditions. The routes must provide for the evacuation of incapacitated persons, with assistance. The use of the evacuation routes may not be dependent on any powered device. The routes must be designed to minimise the possibility of blockage, which might result from fire, mechanical or structural failure, or persons standing on top of or against the escape routes. In the event the aeroplane's main power system or compartment main lighting system should fail, emergency illumination for each lower deck service compartment must be automatically provided.

(b) There must be a means for two-way voice communication between the flight deck and each lower deck service compartment, which remains available following loss of normal electrical power generating system.

(c) There must be an aural emergency alarm system, audible during normal and emergency conditions, to enable crew members on the flight deck and at each required floor level emergency exit to alert occupants of each lower deck service compartment of an emergency situation.

(d) There must be a means, readily detectable by occupants of each lower deck service compartment that indicates when seat belts should be fastened.

(e) If a public address system is installed in the aeroplane, speakers must be provided in each lower deck service compartment.

(f) For each occupant permitted in a lower deck service compartment, there must be a forward or aft facing seat, which meets the requirements of CS 25.785(d) and must be able to withstand maximum flight loads when occupied.

(g) For each powered lift system installed between a lower deck service compartment and the main deck for the carriage of persons or equipment, or both, the system must meet the following requirements:

(1) Each lift control switch outside the lift, except emergency stop buttons, must be designed to prevent the activation of the lift if the lift door, or the hatch required by sub-paragraph (g)(3) of this paragraph, or both are open.

(2) An emergency stop button, that when activated will immediately stop the lift, must be installed within the lift and at each entrance to the lift.

(3) There must be a hatch capable of being used for evacuating persons from the lift that is openable from inside and outside the lift without tools, with the lift in any position.

VENTILATION AND HEATING

CS 25.831 Ventilation

ED Decision 2003/2/RM

(a) Each passenger and crew compartment must be ventilated and each crew compartment must have enough fresh air (but not less than 0.28 m^3/min. (10 cubic ft per minute) per crewmember) to enable crewmembers to perform their duties without undue discomfort or fatigue. (See AMC 25.831(a).)

(b) Crew and passenger compartment air must be free from harmful or hazardous concentrations of gases or vapours. In meeting this requirement, the following apply:

(1) Carbon monoxide concentrations in excess of one part in 20 000 parts of air are considered hazardous. For test purposes, any acceptable carbon monoxide detection method may be used.

(2) Carbon dioxide concentration during flight must be shown not to exceed 0·5% by volume (sea level equivalent) in compartments normally occupied by passengers or crewmembers. For the purpose of this subparagraph, "sea level equivalent" refers to conditions of 25° C (77° F) and 1 013·2 hPa (760 millimetres of mercury) pressure.

(c) There must be provisions made to ensure that the conditions prescribed in sub-paragraph (b) of this paragraph are met after reasonably probable failures or malfunctioning of the ventilating, heating, pressurisation or other systems and equipment. (See AMC 25.831(c).)

(d) If accumulation of hazardous quantities of smoke in the cockpit area is reasonably probable, smoke evacuation must be readily accomplished, starting with full pressurisation and without depressurising beyond safe limits.

(e) Except as provided in sub-paragraph (f) of this paragraph, means must be provided to enable the occupants of the following compartments and areas to control the temperature and quantity of ventilating air supplied to their compartment or area independently of the temperature and quantity of air supplied to other compartments and areas:

(1) The flight-crew compartment.

(2) Crew-member compartments and areas other than the flight-crew compartment unless the crewmember compartment or area is ventilated by air interchange with other compartments or areas under all operating conditions.

(f) Means to enable the flight crew to control the temperature and quantity of ventilating air supplied to the flight-crew compartment independently of the temperature and quantity of ventilating air supplied to other compartments are not required if all of the following conditions are met:

(1) The total volume of the flight-crew and passenger compartments is 22.65m^3 (800 cubic ft) or less.

(2) The air inlets and passages for air to flow between flight-crew and passenger compartments are arrange to provide compartment temperatures within 2.8°C (5°F) of each other and adequate ventilation to occupants in both compartments.

(3) The temperature and ventilation controls are accessible to the flight crew.

AMC 25.831(a) Ventilation

ED Decision 2003/2/RM

The supply of fresh air in the event of the loss of one source, should not be less than 0.18 kg/min (0·4 lb/min) per person for any period exceeding five minutes. However, reductions below this flow rate may be accepted provided that the compartment environment can be maintained at a level which is not hazardous to the occupant.

AMC 25.831(c) Ventilation

ED Decision 2003/2/RM

1 To avoid contamination the fresh air supply should be suitably ducted where it passes through any compartment inaccessible in flight.

2 Where the air supply is supplemented by a recirculating system, it should be possible to stop the recirculating system and –

a. Still maintain the fresh air supply prescribed, and

b. Still achieve 1.

CS 25.832 Cabin ozone concentration

ED Decision 2003/2/RM

(a) The aeroplane cabin ozone concentration during flight must be shown not to exceed –

(1) 0·25 parts per million by volume, sea level equivalent, at any time above flight level 320; and

(2) 0·1 parts per million by volume, sea level equivalent, time-weighted average during any 3-hour interval above flight level 270.

(b) For the purpose of this paragraph, “sea level equivalent” refers to conditions of 25° C (77° F) and 1 013·2 hPa (760 millimetres of mercury) pressure.

(c) Compliance with this paragraph must be shown by analysis or tests based on aeroplane operational procedures and performance limitations, that demonstrated that either –

(1) The aeroplane cannot be operated at an altitude which would result in cabin ozone concentrations exceeding the limits prescribed by sub-paragraph (a) of this paragraph; or

(2) The aeroplane ventilation system, including any ozone control equipment, will maintain cabin ozone concentrations at or below the limits prescribed by sub-paragraph (a) of this paragraph.

CS 25.833 Combustion heating systems

ED Decision 2003/2/RM

Combustion heaters must be approved.

PRESSURISATION

CS 25.841 Pressurised cabins

ED Decision 2003/2/RM

(a) Pressurised cabins and compartments to be occupied must be equipped to provide a cabin pressure altitude of not more than 2438 m (8000 ft) at the maximum operating altitude of the aeroplane under normal operating conditions. If certification for operation over 7620 m (25 000 ft) is requested, the aeroplane must be able to maintain a cabin pressure altitude of not more than 4572 m (15 000 ft) in the event of any reasonably probable failure or malfunction in the pressurisation system.

(b) Pressurised cabins must have at least the following valves, controls, and indicators for controlling cabin pressure:

(1) Two pressure relief values to automatically limit the positive pressure differential to a predetermined valve at the maximum rate of flow delivered by the pressure source. The combined capacity of the relief valves must be large enough so that the failure of any one valve would not cause an appreciable rise in the pressure differential. The pressure differential is positive when the internal pressure is greater than the external.

(2) Two reverse pressure differential relief valves (or their equivalents) to automatically prevent a negative pressure differential that would damage the structure. One valve is enough, however, if it is of a design that reasonably precludes it's malfunctioning.

(3) A means by which the pressure differential can be rapidly equalised.

(4) An automatic or manual regulator for controlling the intake or exhaust airflow, or both, for maintaining the required internal pressures and airflow rates.

(5) Instruments at the pilot or flight engineer station to show the pressure differential, the cabin pressure altitude, and the rate of change of the cabin pressure altitude.

(6) Warning indication at the pilot or flight engineer station to indicate when the safe or pre-set pressure differential and cabin pressure altitude limits are exceeded. Appropriate warning markings on the cabin pressure differential indicator meet the warning requirement for pressure differential limits and an aural or visual signal (in addition to cabin altitude indicating means) meets the warning requirement for cabin pressure altitude limits if it warns the flight crew when the cabin pressure altitude exceeds 3048 m (10 000 ft).

(7) A warning placard at the pilot or flight engineer station if the structure is not designed for pressure differentials up to the maximum relief valve setting in combination with landing loads.

(8) The pressure sensors necessary to meet the requirements of sub-paragraphs (b)(5) and (b)(6) of this paragraph and CS 25.1447(c), must be located and the sensing system designed so that, in the event of loss of cabin pressure in any passenger or crew compartment (including upper and lower lobe galleys), the warning and automatic presentation devices, required by those provisions, will be actuated without any delay that would significantly increase the hazards resulting from decompression.

CS 25.843 Tests for pressurised cabins

ED Decision 2003/2/RM

(a) *Strength test.* The complete pressurised cabin, including doors, windows, and valves, must be tested as a pressure vessel for the pressure differential specified in CS 25.365(d).

(b) *Functional tests*. The following functional tests must be performed:

(1) Tests of the functioning and capacity of the positive and negative pressure differential valves, and of the emergency release valve, to simulate the effects of closed regulator valves.

(2) Tests of the pressurisation system to show proper functioning under each possible condition of pressure, temperature, and moisture, up to the maximum altitude for which certification is requested.

(3) Flight tests, to show the performance of the pressure supply, pressure and flow regulators, indicators, and warning signals, in steady and stepped climbs and descents at rates corresponding to the maximum attainable within the operating limitations of the aeroplane, up to the maximum altitude for which certification is requested.

(4) Tests of each door and emergency exit, to show that they operate properly after being subjected to the flight tests prescribed in sub-paragraph (b)(3) of this paragraph.

FIRE PROTECTION

CS 25.851 Fire extinguishers

ED Decision 2003/2/RM

(a) *Hand fire extinguishers*. (See AMC 25.851(a).)

(1) The following minimum number of hand fire extinguishers must be conveniently located and evenly distributed in passenger compartments. (See AMC 25.851(a)(1).):

Passenger capacity	Number of extinguishers
7 to 30	1
31 to 60	2
61 to 200	3
201 to 300	4
301 to 400	5
401 to 500	6
501 to 600	7
601 to 700	8

(2) At least one hand fire extinguisher must be conveniently located in the pilot compartment (see AMC 25.851(a)(2)).

(3) At least one readily accessible hand fire extinguisher must be available for use in each Class A or Class B cargo or baggage compartment and in each Class E cargo or baggage compartment that is accessible to crewmembers in flight.

(4) At least one hand fire extinguisher must be located in, or readily accessible for use in, each galley located above or below the passenger compartment.

(5) Each hand fire extinguisher must be approved.

(6) At least one of the required fire extinguishers located in the passenger compartment of an aeroplane with a passenger capacity of at least 31 and not more than 60, and at least two of the fire extinguishers located in the passenger compartment of an aeroplane with a passenger capacity of 61 or more must contain Halon 1211 (bromochlorodifluoromethane, $CBrC_1F_2$), or equivalent, as the extinguishing agent. The type of extinguishing agent used in any other extinguisher required by this paragraph must be appropriate for the kinds of fires likely to occur where used.

(7) The quantity of extinguishing agent used in each extinguisher required by this paragraph must be appropriate for the kinds of fires likely to occur where used.

(8) Each extinguisher intended for use in a personnel compartment must be designed to minimise the hazard of toxic gas concentration.

(b) *Built-in fire extinguishers*. If a built-in fire extinguisher is provided –

(1) Each built-in fire extinguishing system must be installed so that –

(i) No extinguishing agent likely to enter personnel compartments will be hazardous to the occupants; and

(ii) No discharge of the extinguisher can cause structural damage.

(2) The capacity of each required built-in fire extinguishing system must be adequate for any fire likely to occur in the compartment where used, considering the volume of the compartment and the ventilation rate.

AMC 25.851(a) Fire extinguishers

ED Decision 2003/2/RM

1 Each extinguisher should be readily accessible and mounted so as to facilitate quick removal from its mounting bracket.

2 Unless an extinguisher is clearly visible, its location should be indicated by a placard or sign having letters of at least 9.5 mm (0·375) inches in height on a contrasting background. Appropriate symbols may be used to supplement such a placard or sign.

AMC 25.851(a)(1) Fire extinguishers

ED Decision 2003/2/RM

1 The number and location of hand fire extinguishers should be such as to provide adequate availability for use, account being taken of the number and size of the passenger compartments and the location of toilets, galleys, etc. These considerations may result in the number being greater than the minimum prescribed.

2 Where only one hand extinguisher is required it should be located at the cabin crew member station, where provided, otherwise near the main entrance door.

3 Where two or more hand extinguishers are required and their location is not otherwise dictated by consideration of paragraph 1 above, an extinguisher should be located at each end of the cabin and the remainder distributed throughout the cabin as evenly as is practicable.

AMC 25.851(a)(2) Fire extinguishers

ED Decision 2003/2/RM

There should be at least one fire extinguisher suitable for both flammable fluid and electrical equipment fires installed in each pilot's compartment. Additional extinguishers may be required for the protection of other compartments accessible to the crew in flight (e.g. electrical equipment bays) or from consideration of CS 25.851(a)(2).

NOTE: Dry chemical fire extinguishers should not be used in pilot compartments because of the adverse effects on vision during discharge and, if non-conductive, interference with electrical contacts by the chemical residues.

CS 25.853 Compartment interiors

ED Decision 2003/2/RM

For each compartment occupied by the crew or passengers, the following apply:

(a) Materials (including finishes or decorative surfaces applied to the materials) must meet the applicable test criteria prescribed in Part I of Appendix F or other approved equivalent methods, regardless of the passenger capacity of the aeroplane.

(b) *Reserved*

(c) In addition to meeting the requirements of sub-paragraph (a) of this paragraph, seat cushions, except those on flight crewmember seats, must meet the test requirements of part II of appendix F, or other equivalent methods, regardless of the passenger capacity of the aeroplane.

(d) Except as provided in sub-paragraph (e) of this paragraph, the following interior components of aeroplanes with passenger capacities of 20 or more must also meet the test requirements of parts IV and V of appendix F, or other approved equivalent method, in addition to the flammability requirements prescribed in sub-paragraph (a) of this paragraph:

(1) Interior ceiling and wall panels, other than lighting lenses and windows;

(2) Partitions, other than transparent panels needed to enhance cabin safety;

(3) Galley structure, including exposed surfaces of stowed carts and standard containers and the cavity walls that are exposed when a full complement of such carts or containers is not carried; and

(4) Large cabinets and cabin stowage compartments, other than underseat stowage compartments for stowing small items such as magazines and maps.

(e) The interiors of compartments, such as pilot compartments, galleys, lavatories, crew rest quarters, cabinets and stowage compartments, need not meet the standards of sub-paragraph (d) of this paragraph, provided the interiors of such compartments are isolated from the main passenger cabin by doors or equivalent means that would normally be closed during an emergency landing condition.

(f) Smoking is not to be allowed in lavatories. If smoking is to be allowed in any other compartment occupied by the crew or passengers, an adequate number of self-contained, removable ashtrays must be provided for all seated occupants.

(g) Regardless of whether smoking is allowed in any other part of the aeroplane, lavatories must have self-contained removable ashtrays located conspicuously both inside and outside each lavatory. One ashtray located outside a lavatory door may serve more than one lavatory door if the ashtray can be seen readily from the cabin side of each lavatory door served.

(h) Each receptacle used for the disposal of flammable waste material must be fully enclosed, constructed of at least fire resistant materials, and must contain fires likely to occur in it under normal use. The ability of the receptacle to contain those fires under all probable conditions of wear, misalignment, and ventilation expected in service must be demonstrated by test.

AMC 25.853 Compartment interiors

ED Decision 2003/2/RM

Relevant part of the FAA Advisory Circular 25-17 Transport Airplane Cabin Interiors Crashworthiness Handbook, dated 15/7/91, AC 25.853-1 dated 17/9/86 and AC 25-18 dated 6/1/94 are accepted by the Agency as providing acceptable means of compliance with CS 25.853.

Note: “relevant parts” means “the part of the AC 25-17 that addresses the applicable FAR/CS-25 paragraph”.

CS 25.854 Lavatory fire protection

ED Decision 2003/2/RM

For aeroplanes with a passenger capacity of 20 or more –

(a) Each lavatory must be equipped with a smoke detector system or equivalent that provides a warning light in the cockpit, or provides a warning light or audible warning in the passenger cabin that would be readily detected by a cabin crew member; and

(b) Each lavatory must be equipped with a built-in fire extinguisher for each disposal receptacle for towels, paper, or waste, located within the lavatory. The extinguisher must be designed to discharge automatically into each disposal receptacle upon occurrence of a fire in that receptacle.

CS 25.855 Cargo or baggage compartments

ED Decision 2003/2/RM

For each cargo or baggage compartment not occupied by crew or passengers, the following apply:

(a) The compartment must meet one of the class requirements of CS 25.857.

(b) Class B through Class E cargo or baggage compartments, as defined in CS 25.857, must have a liner, and the liner must be separate from (but may be attached to) the aeroplane structure.

(c) Ceiling and sidewall liner panels of Class C and D compartments must meet the test requirements of Part III of Appendix F or other approved equivalent methods.

(d) All other materials used in the construction of the cargo or baggage compartment must meet the applicable test criteria prescribed in Part I of Appendix F, or other approved equivalent methods.

(e) No compartment may contain any controls, wiring, lines, equipment, or accessories whose damage or failure would affect safe operation, unless those items are protected so that –

(1) They cannot be damaged by the movement of cargo in the compartment; and

(2) Their breakage or failure will not create a fire hazard.

(f) There must be means to prevent cargo or baggage from interfering with the functioning of the fire protective features of the compartment.

(g) Sources of heat within the compartment must be shielded and insulated to prevent igniting the cargo or baggage.

(h) Flight tests must be conducted to show compliance with the provisions of CS 25.857 concerning –

(1) Compartment accessibility;

(2) The entry of hazardous quantities of smoke or extinguishing agent into compartments occupied by the crew or passengers; and

(3) The dissipation of the extinguishing agent in Class C compartments.

(i) During the above tests, it must be shown that no inadvertent operation of smoke or fire detectors in any compartment would occur as a result of fire contained in any other compartment, either during or after extinguishment, unless the extinguishing system floods each such compartment simultaneously.

CS 25.857 Cargo compartment classification

ED Decision 2003/2/RM

(a) *Class A.* A Class A cargo or baggage compartment is one in which –

(1) The presence of a fire would be easily discovered by a crew member while at his station; and

(2) Each part of the compartment is easily accessible in flight.

(b) *Class B*. (See AMC 25.857(b).) A Class B cargo or baggage compartment is one in which –

(1) There is sufficient access in flight to enable a crewmember to effectively reach any part of the compartment with the contents of a hand fire extinguisher;

(2) When the access provisions are being used no hazardous quantity of smoke, flames or extinguishing agent will enter any compartment occupied by the crew or passengers; and

(3) There is a separate approved smoke detector or fire detector system to give warning to the pilot or flight engineer station.

(c) *Class C*. A Class C cargo or baggage compartment is one not meeting the requirements for either a Class A or B compartment but in which–

(1) There is a separate approved smoke detector or fire detector system to give warning at the pilot or flight engineer station;

(2) There is an approved built-in fire-extinguishing or suppression system controllable from the cockpit.

(3) There are means to exclude hazardous quantities of smoke, flames, or extinguishing agent, from any compartment occupied by the crew or passengers; and

(4) There are means to control ventilation and draughts within the compartment so that the extinguishing agent used can control any fire that may start within the compartment.

(d) *Class D*. (See AMC 25.857(d).) A Class D cargo or baggage compartment is one in which –

(1) A fire occurring in it will be completely confined without endangering the safety of the aeroplane or the occupants;

(2) There are means to exclude hazardous quantities of smoke, flames, or other noxious gases, from any compartment occupied by the crew or passengers;

(3) Ventilation and draughts are controlled within each compartment so that any fire likely to occur in the compartment will not progress beyond safe limits;

(4) Reserved.

(5) Consideration is given to the effect of heat within the compartment on adjacent critical parts of the aeroplane.

(6) The compartment volume does not exceed 28.32 m^3 (1000 cubic ft).

For compartments of 14.16 m^3 (500 cubic ft) or less, an airflow of 42.48 m^3/hr (1500 cubic ft per hour) is acceptable.

(e) *Class E.* A Class E cargo compartment is one on aeroplanes used only for the carriage of cargo and in which –

(1) Reserved.

(2) There is a separate approved smoke or fire detector system to give warning at the pilot or flight engineer station;

(3) There are means to shut off the ventilating airflow to, or within, the compartment, and the controls for these means are accessible to the flight crew in the crew compartment;

(4) There are means to exclude hazardous quantities of smoke, flames, or noxious gases, from the flight-crew compartment; and

(5) The required crew emergency exits are accessible under any cargo loading condition.

AMC 25.857 Cargo compartment classification

ED Decision 2003/2/RM

Relevant part of the FAA Advisory Circular 25-17 Transport Airplane Cabin Interiors Crashworthiness Handbook, dated 15/7/91, AC 25-9A Smoke Detection, Penetration, and Evacuation Tests and Related Flight Manual Emergency Procedures, dated 6/1/94, and AC 25-18 Transport Category Airplanes Modified for Cargo Service, dated 6/1/94 are accepted by the Agency as providing acceptable means of compliance with CS 25.857.

Note: "relevant parts" means "the part of the AC 25-17 that addresses the applicable FAR/CS-25 paragraph".

CS 25.858 Cargo compartment fire detection systems

ED Decision 2003/2/RM

If certification with cargo compartment fire detection provisions is requested, the following must be met for each cargo compartment with those provisions:

(a) The detection system must provide a visual indication to the flight crew within one minute after the start of a fire.

(b) The system must be capable of detecting a fire at a temperature significantly below that at which the structural integrity of the aeroplane is substantially decreased.

(c) There must be means to allow the crew to check in flight, the functioning of each fire detector circuit.

(d) The effectiveness of the detection system must be shown for all approved operating configurations and conditions.

CS 25.859 Combustion heater fire protection

ED Decision 2003/2/RM

(a) *Combustion heater fire zones.* The following combustion heater fire zones must be protected from fire in accordance with the applicable provisions of CS 25.1181 to 25.1191 and 25.1195 to 25.1203:

(1) The region surrounding the heater, if this region contains any flammable fluid system components (excluding the heater fuel system) that could –

(i) Be damaged by heater malfunctioning; or

(ii) Allow flammable fluids or vapours to reach the heater in case of leakage.

(2) The region surrounding the heater, if the heater fuel system has fittings that, if they leaked, would allow fuel or vapours to enter this region.

(3) The part of the ventilating air passage that surrounds the combustion chamber. However, no fire extinguishment is required in cabin ventilating air passages.

(b) *Ventilating air ducts.* Each ventilating air duct passing through any fire zone must be fireproof. In addition –

(1) Unless isolation is provided by fireproof valves or by equally effective means, the ventilating air duct downstream of each heater must be fireproof for a distance great enough to ensure that any fire originating in the heater can be contained in the duct; and

(2) Each part of any ventilating duct passing through any region having a flammable fluid system must be constructed or isolated from that system so that the malfunctioning of any component of that system cannot introduce flammable fluids or vapours into the ventilating airstream.

(c) *Combustion air ducts*. Each combustion air duct must be fireproof for a distance great enough to prevent damage from backfiring or reverse flame propagation. In addition –

(1) No combustion air duct may have a common opening with the ventilating airstream unless flames from backfires or reverse burning cannot enter the ventilating airstream under any operating condition, including reverse flow or malfunctioning of the heater or its associated components; and

(2) No combustion air duct may restrict the prompt relief of any backfire that, if so restricted, could cause heater failure.

(d) *Heater controls; general*. Provision must be made to prevent the hazardous accumulation of water or ice on or in any heater control component, control system tubing, or safety control.

(e) *Heater safety controls.* For each combustion heater there must be the following safety control means:

(1) Means independent of the components provided for the normal continuous control of air temperature, airflow, and fuel flow must be provided, for each heater, to automatically shut off the ignition and fuel supply to that heater at a point remote from that heater when any of the following occurs:

(i) The heat exchanger temperature exceeds safe limits.

(ii) The ventilating air temperature exceeds safe limits.

(iii) The combustion airflow becomes inadequate for safe operation.

(iv) The ventilating airflow becomes inadequate for safe operation.

(2) The means of complying with sub-paragraph (e)(1) of this paragraph for any individual heater must –

(i) Be independent of components serving any other heater whose heat output is essential for safe operation; and

(ii) Keep the heater off until restarted by the crew.

(3) There must be means to warn the crew when any heater whose heat output is essential for safe operation has been shut off by the automatic means prescribed in sub-paragraph (e)(1) of this paragraph.

(f) *Air intakes*. Each combustion and ventilating air intake must be located so that no flammable fluids or vapours can enter the heater system under any operating condition –

(1) During normal operation; or

(2) As a result of the malfunctioning of any other component.

(g) *Heater exhaust*. Heater exhaust systems must meet the provisions of CS 25.1121 and 25.1123. In addition, there must be provisions in the design of the heater exhaust system to safely expel the products of combustion to prevent the occurrence of –

(1) Fuel leakage from the exhaust to surrounding compartments;

(2) Exhaust gas impingement on surrounding equipment or structure;

(3) Ignition of flammable fluids by the exhaust, if the exhaust is in a compartment containing flammable fluid lines; and

(4) Restriction by the exhaust of the prompt relief of backfires that, if so restricted, could cause heater failure.

(h) *Heater fuel systems*. Each heater fuel system must meet each powerplant fuel system requirement affecting safe heater operation. Each heater fuel system component within the ventilating airstream must be protected by shrouds so that no leakage from those components can enter the ventilating airstream.

(i) *Drains*. There must be means to safely drain fuel that might accumulate within the combustion chamber or the heater exchanger. In addition –

(1) Each part of any drain that operates at high temperatures must be protected in the same manner as heater exhausts; and

(2) Each drain must be protected from hazardous ice accumulation under any operating conditions.

CS 25.863 Flammable fluid fire protection

ED Decision 2003/2/RM

(a) In each area where flammable fluids or vapours might escape by leakage of a fluid system, there must be means to minimise the probability of ignition of the fluids and vapours, and the resultant hazards if ignition does occur. (See AMC 25.863(a).)

(b) Compliance with sub-paragraph (a) of this paragraph must be shown by analysis or tests, and the following factors must be considered.

(1) Possible sources and paths of fluid leakage, and means of detecting leakage.

(2) Flammability characteristics of fluids, including effects of any combustible or absorbing materials.

(3) Possible ignition sources, including electrical faults, overheating of equipment, and malfunctioning of protective devices.

(4) Means available for controlling or extinguishing a fire, such as stopping flow of fluids, shutting down equipment, fireproof containment, or use of extinguishing agents.

(5) Ability of aeroplane components that are critical to safety of flight to withstand fire and heat.

(c) If action by the flight crew is required to prevent or counteract a fluid fire (e.g. equipment shutdown or actuation of a fire extinguisher) quick acting means must be provided to alert the crew.

(d) Each area where flammable fluids or vapours might escape by leakage of a fluid system must be identified and defined.

AMC 25.863(a) Flammable fluid fire protection

ED Decision 2003/2/RM

The cooling air supply for any electrical or electronic equipment should be conveyed and discharged so as not to create a hazard following failure of the equipment.

NOTE: Where necessary the cooling duct should be fireproof.

Zones with surfaces which may be exposed to flammable fluids or vapours should be ventilated if the temperature of the surfaces may exceed (under normal or failure conditions) a dangerous value with regard to these fluids or vapours. Unless a higher value can be substantiated, a temperature exceeding 200°C is considered dangerous.

CS 25.865 Fire protection of flight controls, engine mounts, and other flight structure

ED Decision 2003/2/RM

Essential flight controls, engine mounts, and other flight structures located in designated fire zones or in adjacent areas which would be subjected to the effects of fire in the fire zone must be constructed of fireproof material or shielded so that they are capable of withstanding the effects of fire.

CS 25.867 Fire protection: other components

ED Decision 2003/2/RM

(a) Surfaces to the rear of the nacelles, within one nacelle diameter of the nacelle centreline, must be constructed of materials at least equivalent in resistance to fire as aluminium alloy in dimensions appropriate for the purpose for which they are used.

(b) Sub-paragraph (a) of this paragraph does not apply to tail surfaces to the rear of the nacelles that could not be readily affected by heat, flames, or sparks coming from a designated fire zone or engine compartment of any nacelle.

CS 25.869 Fire protection: systems

ED Decision 2003/2/RM

(a) Electrical system components:

(1) Components of the electrical system must meet the applicable fire and smoke protection requirements of CS 25.831(c) and CS 25.863. (See AMC 25.863(a).)

(2) Electrical cables, terminals, and equipment in designated fire zones, that are used during emergency procedures, must be at least fire resistant.

(3) Main power cables (including generator cables) in the fuselage must be designed to allow a reasonable degree of deformation and stretching without failure and must be –

(i) Isolated from flammable fluid lines; or

(ii) Shrouded by means of electrically insulated, flexible conduit, or equivalent, which is in addition to the normal cable insulation.

(4) Insulation on electrical wire and electrical cable installed in any area of the aeroplane must be self-extinguishing when tested in accordance with the applicable portions of Part I, Appendix F.

(b) Each vacuum air system line and fitting on the discharge side of the pump that might contain flammable vapours or fluids must meet the requirements of CS 25.1183 if the line or fitting is in a designated fire zone. Other vacuum air systems components in designated fire zones must be at least fire resistant.

(c) (See AMC 25.869(c).) Oxygen equipment and lines must –

(1) Not be located in any designated fire zone.

(2) Be protected from heat that may be generated in, or escape from, any designated fire zone, and

(3) Be installed so that escaping oxygen cannot cause ignition of grease, fluid, or vapour accumulations that are present in normal operation or as a result of failure or malfunction of any system.

AMC 25.869(a)(1) Electrical System Fire and Smoke Protection

ED Decision 2003/2/RM

These requirements, and those of CS 25.863 applicable to electrical equipment, may be satisfied by the following:

1 Electrical components in regions immediately behind firewalls and in engine pod attachment structures should be of such materials and at such a distance from the firewall that they will not suffer damage that could hazard the aeroplane if the surface of the firewall adjacent to the fire is heated to 1100°C for 15 minutes.

2 Electrical equipment should be so constructed and/or installed that in the event of failure, no hazardous quantities of toxic or noxious (e.g. smoke) products will be distributed in the crew or passenger compartments.

3 Electrical equipment, which may come into contact with flammable vapours should be so designed and installed as to minimise the risk of the vapours exploding under both normal and fault conditions. This can be satisfied by meeting the Explosion Proofness Standards of RTCA DO-160/EUROCAE ED-14.

AMC 25.869(c) Fire Protection for Oxygen Equipment

ED Decision 2003/2/RM

1 High-pressure shut-off valves should be designed to provide effective slow opening and closing, so as to avoid the possible risk of fire or explosion.

2 Re-charging systems, if installed, should be provided with means to prevent excessive rates of charging which could result in dangerously high temperatures within the system. The charging system should also provide protection from contamination.

3 The compartments in which high-pressure system components, including source(s) are located should have adequate ventilation to ensure the rapid dilution of leaked oxygen. Such compartments should also provide adequate protection against contamination by liquids and other products which could result in the risk of fire.

4 Where in-situ charging facilities are provided, the compartments in which they are located should be accessible from outside the aircraft and as remote as possible from other service points and equipment. Placards should be provided, located adjacent to the servicing point, with adequate instructions covering the precautions to be observed when the system is being charged.

5 The installation of the system should be such that components and pipe lines –

a. Are adequately separated from electrical and fluid systems,

b. Are routed so as to minimise joints and sharp bends,

c. Are clear of moving controls and other mechanisms,

d. Are protected against grease or other lubricants, and are protected against the effects of vibration.

In addition, joints should where possible, be assembled dry, but where compounds are used for sealing they should be approved for that purpose.

6 Where the oxygen is supplied from chemical generators, the effects of heat emission, during both normal and inadvertent operation, on both the installation and other adjacent equipment, should be taken into account.

MISCELLANEOUS

CS 25.871 Levelling means

ED Decision 2003/2/RM

There must be means for determining when the aeroplane is in a level position on the ground.

CS 25.875 Reinforcement near propellers

ED Decision 2003/2/RM

(a) Each part of the aeroplane near the propeller tips must be strong and stiff enough to withstand the effects of the induced vibration and of ice thrown from the propeller.

(b) No window may be near the propeller tips unless it can withstand the most severe ice impact likely to occur.

CS 25.899 Electrical bonding and protection against static electricity

ED Decision 2003/2/RM

(a) Electrical bonding and protection against static electricity must be designed to minimise accumulation of electrostatic charge, which would cause:

(1) Human injury from electrical shock,

(2) Ignition of flammable vapours, or

(3) Interference with installed electrical / electronic equipment.

(b) Compliance with sub-paragraph (a) of this paragraph may be shown by

(1) Bonding the components properly to the airframe or

(2) Incorporating other acceptable means to dissipate the static charge so as not to endanger the aeroplane, personnel or operation of the installed electrical/electronic systems.

AMC 25.899 Electrical bonding and protection against static electricity

ED Decision 2003/2/RM

1 Protection against Lightning Discharges.

Refer to CS 25.581; 25.954; 25.1316 and associated Acceptable Means of Compliance.

2 Characteristics of Lightning Discharges.

Refer to EUROCAE document ED-84 (including Amendment N°1 dated 06/09/99) titled: Aircraft Lightning Environment and Related Test Waveforms; or equivalent SAE ARP5412 document.

3 *Protection against the Accumulation of Static Charges*

3.1 *General*. All items, which by the accumulation and discharge of static charges may cause a danger of electrical shock, ignition of flammable vapours or interference with essential equipment (e.g. radio communications and navigational aids) should be adequately bonded to the main earth systems.

3.2 *Intermittent Contact.* The design should be such as to ensure that no fortuitous intermittent contact can occur between metallic and/or metallized parts.

3.3 *High Pressure Refuelling and Fuel Transfer.* Where provision is made for high pressure refuelling and/or for high rates of fuel transfer it should be established, by test, or by consultation with the appropriate fuel manufacturers, that dangerously high voltages will not be induced within the fuel system. If compliance with this requirement involves any restriction on the types of fuel to be used or on the use of additives, this should be established.

3.3.1 With standard refuelling equipment and standard aircraft turbine fuels, voltages high enough to cause sparking may be induced between the surface of the fuel and the metal parts of the tank at refuelling flow velocities above approximately 7 meters/second (23 feet/second). These induced voltages may be increased by the presence of additives and contaminants (e.g. anti-corrosion inhibitors, lubricating oil, free water), and by splashing or spraying of the fuel in the tank.

3.3.2 The static charge can be reduced as follows:

a. By means taken in the refuelling equipment such as increasing the diameter of refuelling lines and designing filters to give the minimum of electrostatic charging, or

b. By changing the electrical properties of the fuel by the use of anti-static additives and thus reducing the accumulation of static charge in the tank to negligible amount.

3.3.3 The critical refuelling rates are related to the aeroplane refuelling installations, and the designer should seek the advice of fuel suppliers on this problem.

4 Primary and Secondary Bonding Paths.

(Reference : CS 25.581; 25.899, 25.954; 25.1316; 25.1353; 25.1360.)

4.1 Primary bonding paths are those paths which are required to carry lightning discharge currents. These paths should be of as low an electrical impedance as is practicable. Secondary bonding paths are those paths provided for other forms of bonding.

4.2 Where additional conductors are required to provide or supplement the inherent primary bonding paths provided by the structure or equipment, then the cross-sectional area of such primary conductors made from copper should be not less than 3 mm^2 except that, where a single conductor is likely to carry the whole discharge from an isolated section, the cross-sectional area would be not less than 6 mm^2. Aluminium primary conductors should have a cross-sectional area giving an equivalent surge carrying capacity.

4.3 Primary bonding paths should be used for –

a. Connecting together the main earths of separable major components which may carry lightning discharges,

b. Connecting engines to the main earth,

c. Connecting to the main earth all metal parts presenting a surface on or outside of the external surface of the aeroplane, and

d. Conductors on external non-metallic parts.

4.4 Where additional conductors are required to provide or supplement the inherent secondary bonding paths provided by the structure or equipment then the cross-sectional area of such secondary conductors made from copper should be not less than 1 mm^2. Where a single wire is used its size should be not less than 1·2 mm diameter.

5 *Resistance and Continuity Measurements*. Measurements should be made to determine the efficacy of the bonding and connection between at least the following:

5.1 Primary Bonding Paths

5.1.1 The extremities of the fixed portions of the aeroplane and such fixed external panels and components where the method of construction and/or assembly leads to doubt as to the repeatability of the bond, e.g. removable panels.

5.1.2 The engines and the main aeroplane earth.

5.1.3 External movable metal surfaces or components and the main aeroplane earth.

5.1.4 The bonding conductors of external non-metallic parts and the main aeroplane earth.

5.1.5 Internal components for which a primary bond is specified and the main aeroplane earth.

5.2 Secondary Bonding Paths

5.2.1 Metallic parts, normally in contact with flammable fluids, and the main aeroplane earth.

5.2.2 Isolated conducting parts subject to appreciable electrostatic charging and the main aeroplane earth.

5.2.3 Electrical panels and other equipment accessible to the occupants of the aeroplane and the main aeroplane earth.

5.2.4 Earth connections, which normally carry the main electrical supply and the main aeroplane earth. The test on these connections should be such as to ensure that the connections can carry, without risk of fire or damage to the bond, or excessive volt drop, such continuous normal currents and intermittent fault currents as are applicable.

5.2.5 Electrical and electronic equipment and the aeroplane main earth, where applicable, and as specified by the aeroplane constructor.

5.2.6 Static discharger wicks and the main aeroplane structure.

6 *Electrical Properties of Composite Structure*

6.1 In the case of lightning protection, for the partial conductors the method of surface protection will vary with the criticality of the structure in question. Deterioration of the means of protection or possible hidden damage to the material which may affect its structural integrity, need to be considered. While such materials provide a measure of electro-magnetic screening, the need for additional measures will be a function of the location of the material in relation to critical equipment and wiring in the aircraft. Particular attention will also have to be given to the protection required near fuel systems – e.g. fuel tanks.

For non-conducting materials which have no intrinsic lightning protection or screening properties, the measures taken will again depend on the relative locations of the material and critical systems or fuel and the possible loss of the components due to internal air pressures in the event of a strike.

6.2 The partial conducting materials should present no problem in dissipating P-static but problems can arise with the non-conductors. Depending upon the location of the material, protection may be required.

6.3 Electrical currents, other than lightning, can flow in some partial conducting materials and means may be required to limit this by provision of alternative current paths if the effect of large voltage drop is important or if such currents can damage the material.

6.4 Particular care has to be taken that all joints, permanent and temporary, are capable of carrying any currents which may flow particularly those resulting from lightning strikes. Structural damage and loss of screening capabilities may occur if these are not adequately controlled.

6.5 The adequacy of the material in supplying a ground plane for antenna may have to be considered. Again it will vary with the material and the radio frequency of the system.

SUBPART E – POWERPLANT

GENERAL

CS 25.901 Installation

ED Decision 2005/006/R

(a) For the purpose of this CS-25 the aeroplane powerplant installation includes each component that –

(1) Is necessary for propulsion;

(2) Affects the control of the major propulsive units; or

(3) Affects the safety of the major propulsive units between normal inspections or overhauls.

(b) For each powerplant –

(1) The installation must comply with –

(i) The installation instructions provided under CS-E20(d) and (e); and

(ii) The applicable provisions of this Subpart (see also AMC 25.901(b)(1)(ii)).

(2) The components of the installation must be constructed, arranged, and installed so as to ensure their continued safe operation between normal inspections or overhauls. (See AMC 25.901(b)(2).)

(3) The installation must be accessible for necessary inspections and maintenance; and

(4) The major components of the installation must be electrically bonded to the other parts of the aeroplane. (See AMC 25.901(b)(4).)

(c) The powerplant installation must comply with CS 25.1309, except that the effects of the following need not comply with CS 25.1309(b):

(1) Engine case burn through or rupture;

(2) Uncontained engine rotor failure; and

(3) Propeller debris release.

(See AMC 25.901(c))

[Amdt 25/1]

AMC 25.901(b)(2) Assembly of Components

ED Decision 2003/2/RM

The objectives of CS 25.671(b) should be satisfied with respect to powerplant systems, where the safety of the aeroplane could otherwise be jeopardised.

AMC 25.901(b)(4) Electrical Bonding

ED Decision 2003/2/RM

Where the engine is not in direct electrical contact with its mounting, the engine should be electrically connected to the main earth system by at least two removable primary conductors, one on each side of the engine.

AMC 25.901(c) Safety Assessment of Powerplant Installations

ED Decision 2005/006/R

1. PURPOSE. This Acceptable Means of Compliance (AMC) describes an acceptable means for showing compliance with the requirements of CS 25.901(c). This document describes a method of conducting a "System Safety Assessment" of the powerplant installation as a means for demonstrating compliance. This guidance is intended to supplement the engineering and operational judgement that must form the basis of any compliance findings. The guidance provided in this document is meant for aeroplane manufacturers, modifiers, foreign regulatory authorities, and EASA Large Aeroplane type certification engineers. Like all AMC material, this AMC is not, in itself, mandatory, and does not constitute a requirement. It is issued to describe an acceptable means, but not the only means, for demonstrating compliance with the powerplant installation requirements for Large Aeroplanes. Terms such as "shall" and "must" are used only in the sense of ensuring applicability of this particular method of compliance when the acceptable method of compliance described in this document is used.

2. RELATED CERTIFICATION SPECIFICATIONS. CS 25.571, CS 25.901, CS 25.903, CS 25.933, CS 25.1309, and CS 25.1529; CS E-50 and E-510, CS P-150 and P-230.

3. APPLICABILITY. The guidance provided in this document applies to powerplant installations on Large Aeroplanes that are subject to the requirements of CS 25.901. This guidance specifically concerns demonstrating compliance with the requirements of CS 25.901(c), which states:

"(c) The powerplant installation must comply with CS 25.1309, except that the effects of the following need not comply with CS 25.1309(b):

(1) Engine case burn through or rupture;

(2) Uncontained engine rotor failure; and

(3) Propeller debris release."

CS 25.901(c) is intended to provide an overall safety assessment of the powerplant installation that is consistent with the requirements of CS 25.1309, while accommodating unique powerplant installation compliance policies. It is intended to augment rather than replace other applicable CS-25 design and performance standards for Large Aeroplanes.

In accommodating unique policies related to powerplant compliance, EASA has determined that specific guidance relative to demonstrating compliance with CS 25.1309(b) is needed; such guidance is contained in this AMC. (No unique compliance requirements for CS 25.1309(a) and (c) are required for powerplant installations.)

Wherever this AMC indicates that compliance with other applicable requirements has been accepted as also meeting the intent of CS 25.901(c) for a specific failure condition, no additional dedicated safety analysis is required. Where this AMC may conflict with AMC 25.1309 ("System Design and Analysis"), this AMC shall take precedence for providing guidance in demonstrating compliance with CS 25.901(c).

When assessing the potential hazards to the aircraft caused by the powerplant installation, the effects of an engine case rupture, uncontained engine rotor failure, engine case burn-through, and propeller debris release are excluded from CS 25.901(c)/CS 25.1309. The effects and rates of these failures are minimised by compliance with CS-E, Engines; CS-P, Propellers; CS 25.903(d)(1), CS 25.905(d), and CS 25.1193.

Furthermore, the effects of encountering environmental threats or other operating conditions more severe than those for which the aircraft is certified (such as volcanic ash or operation above placard speeds) need not be considered in the CS 25.901(c)/CS 25.1309compliance

process. However, if a failure or malfunction can affect the subsequent environmental qualification or other operational capability of the installation, this effect should be accounted for in the CS 25.901(c)/CS 25.1309 assessment.

The terms used in this AMC are intended to be identical to those used in AMC 25.1309.

4. BACKGROUND.

JAR-25 was the Joint Aviation Authorities Airworthiness Code for Large Aeroplanes. It was developed from the U.S. Federal Aviation Regulations Part 25 (FAR 25) during the 1970s. Early versions (Changes) of JAR-25 consisted of only the differences from FAR 25.

In 1976, JAR-25 Change 3 was published and introduced, for the first time, requirement JAR 25.1309 and ACJ Nos. 1 to 7 to JAR 25.1309. Requirement JAR 25.1309 was almost the same as the (then) existing FAR regulation (Amdt. 25-37), but the advisory material given in the ACJ provided interpretation of and acceptable means of compliance with, the requirement. Specific advice was given on how to show that the inverse relationship existed between the criticality of the Failure Condition and its probability of occurrence.

JAR-25, Change 3, did not include any specific JAR-25 requirement for powerplant installation safety assessment and so FAR 25.901(c) was also valid for JAR-25. FAR 25.901(c) text (Amdt. 25-23, Effective 8 May 1970) stated:

"25.901 Installation

(c) The powerplant installation must comply with § 25.1309".

At Change 4 of JAR-25, effective 19 July 1978, JAR 25.901(c) was introduced using the same FAR 25 words as shown above (viz.):

"JAR 25.901 Installation

(c) The power-plant installation must comply with JAR 25.1309."

However, at about that time, the FAA had been reviewing a proposal to revise FAR 25.901(c), to introduce the wording "… no single failure or probable combination …". This revised text was introduced at Amdt. 25-40, effective 2 May 1977.

The revisions introduced by Amdt. 25-40 were reviewed by the JAR-25 Study Groups and in two letters (Refs.: JAR/JET/2416/BT dated 21 July 1977 and JAR/JET/2467/BT dated 21 October 1977), the JAR-25 Powerplant Study Group recommended that, for JAR 25.901(c), the text should remain the same as the pre-Amdt. 25-40 version of FAR 25.901(c).

Since that time, JAR 25.901(c) and CS 25.901(c) have continued to refer to JAR / CS 25.1309 and for EASA/JAA, powerplant installations have been treated in the same way as for other aircraft systems when assessing the effects of failures and malfunctions.

One traditional exception to this has been the assessment of hazards resulting from an engine rotor failure. Previous ACJ No. 1 to JAR 25.1309 allowed for an explicit exception to the quantitative objective for a given catastrophic failure condition, for cases where the state of the art does not permit it to be achieved. This is the case for engine rotor failure and the 'minimisation of hazard' requirement of CS 25.903(d)(1) has been used instead of CS 25.1309 to cover this risk.

5. GENERAL SYSTEM SAFETY ASSESSMENT GUIDANCE.

Compliance with CS 25.901(c)/CS 25.1309 may be shown by a System Safety Assessment (SSA) substantiated by appropriate testing and/or comparable service experience. Such an assessment may range from a simple report that offers descriptive details associated with a

failure condition, interprets test results, compares two similar systems, or offers other qualitative information; to a detailed failure analysis that may include estimated numerical probabilities.

The depth and scope of an acceptable SSA depend on:

– the complexity and criticality of the functions performed by the system(s) under consideration,

– the severity of related failure conditions,

– the uniqueness of the design and extent of relevant service experience,

– the number and complexity of the identified causal failure scenarios, and

– the detectability of contributing failures.

The SSA criteria, process, analysis methods, validation and documentation should be consistent with the guidance material contained in AMC 25.1309. Wherever there is unique guidance specifically for powerplant installations, this is delineated in Section 6, below.

In carrying out the SSA for the powerplant installation for CS 25.901(c)/CS 25.1309, the results of the engine (and propeller) failure analyses (reference CS P-150 and CS E-510) should be used as inputs for those powerplant failure effects that can have an impact on the aircraft. However, the SSA undertaken in response to CS-E and CS-P may not address all the potential effects that an engine and propeller as installed may have on the aircraft.

For those failure conditions covered by analysis under CS-E and CS-P, and for which the installation has no effect on the conclusions derived from these analyses, no additional analyses will be required to demonstrate compliance to CS 25.901(c)/CS 25.1309.

The effects of structural failures on the powerplant installation, and vice versa, should be carefully considered when conducting system safety assessments:

a. Effects of structural failures on powerplant installation. The powerplant installation must be shown to comply with CS 25.901(c) following structural failures that are anticipated to occur within the fleet life of the aeroplane type. This should be part of the assessment of powerplant installation failure condition causes.

   Examples of structural failures that have been of concern in previous powerplant installations are:

   (1) Thrust reverser restraining load path failure that may cause a catastrophic inadvertent deployment.

   (2) Throttle quadrant framing or mounting failure that causes loss of control of multiple engines.

   (3) Structural failures in an avionics rack or related mounting that cause loss of multiple, otherwise independent, powerplant functions/components/systems.

b. Effects of powerplant installation failures on structural elements. Any effect of powerplant installation failures that could influence the suitability of affected structures, should be identified during the CS 25.901(c) assessment and accounted for when demonstrating compliance with the requirements of CS-25, Subpart C ("Structure") and D ("Design and Construction"). This should be part of the assessment of powerplant installation failure condition effects.

Some examples of historical interdependencies between powerplant installations and structures include:

(1) Fuel system failures that cause excessive fuel load imbalance.

(2) Fuel vent, refuelling, or feed system failures that cause abnormal internal fuel tank pressures.

(3) Engine failures that cause excessive loads/vibration.

(4) Powerplant installation failures that expose structures to extreme temperatures or corrosive material.

6. SPECIFIC CS 25.901(c) SYSTEM SAFETY ASSESSMENT GUIDANCE.

This section provides compliance guidance unique to powerplant installations.

a. Undetected Thrust Loss. The SSA discussed in Section 5 should consider undetected thrust loss and its effect on aircraft safety. The assessment should include an evaluation of the failure of components and systems that could cause an undetected thrust loss, except those already accounted for by the approved average-to-minimum engine assessment.

(1) In determining the criticality of undetected thrust losses from a system design and installation perspective, the following should be considered:

(i) Magnitude of the thrust loss,*

(ii) Direction of thrust,

(iii) Phase of flight, and

(iv) Impact of the thrust loss on aircraft safety.

(*Although it is common for safety analyses to consider the total loss of one engine's thrust, a small undetected thrust loss that persists from the point of take-off power set could have a more significant impact on the accelerate/stop distances and take-off flight path/obstacle clearance capability than a detectable single engine total loss of thrust failure condition at V1)

(2) In addition, the level at which any thrust loss becomes detectable should be validated. This validation is typically influenced by:

(i) Impact on aircraft performance and handling,

(ii) Resultant changes in powerplant indications,

(iii) Instrument accuracy and visibility,

(iv) Environmental and operating conditions,

(v) Relevant crew procedures and capabilities, etc.

(3) Reserved.

b. Detected Thrust Loss. While detectable engine thrust losses can range in magnitude from a few percent to 100% of total aircraft thrust, the total loss of useful thrust (in-flight shutdown/IFSD) of one or more engines usually has the largest impact on aircraft capabilities and engine-dependent systems. Furthermore, single and multiple engine IFSD's tend to be the dominant thrust loss-related failure conditions for most powerplant installations. In light of this, the guidance in this AMC focuses on the IFSD failure conditions. The applicant must consider other engine thrust loss failure conditions, as

well, if they are anticipated to occur more often than the IFSD failure condition, or if they are more severe than the related IFSD failure condition.

(1) Single Engine IFSD. The effects of any single engine thrust loss failure condition, including IFSD, on aircraft performance, controllability, manoeuvrability, and crew workload are accepted as meeting the intent of CS 25.901(c) if compliance is also demonstrated with:

– CS 25.111 ("Take-off path"),

– CS 25.121 ("Climb: one-engine-inoperative"), and

– CS 25.143 ("Controllability and Manoeuvrability -- General").

(i) Nevertheless, the effects of an IFSD on other aircraft systems or in combination with other conditions also must be assessed as part of showing compliance with CS 25.901(c)/CS 25.1309. In this case, it should be noted that a single engine IFSD can result from any number of single failures, and that the rate of IFSD's range from approximately $1x10^{-4}$ to $1x10^{-5}$ per engine flight hour. This rate includes all failures within a typical powerplant installation that affect one -- and only one -- engine. Those failures within a typical powerplant that can affect more than one engine are described in Section 6.b.(2), below.

(ii) If an estimate of the IFSD rate is required for a specific turbine engine installation, any one of the following methods is suitable for the purposes of complying with CS 25.901(c)/ CS 25.1309(b):

(A) Estimate the IFSD rate based on service experience of similar powerplant installations;

(B) Perform a bottom-up reliability analysis using service, test, and any other relevant experience with similar components and/or technologies to predict component failure modes and rates; or

(C) Use a conservative value of $1x10^{-4}$ per flight hour.

(iii) If an estimate of the percentage of these IFSD's for which the engine is restartable is required, the estimate should be based on relevant service experience.

(iv) The use of the default value delineated in paragraph 6.b.(1)(ii)(C) is limited to traditional turbine engine installations. However, the other methods (listed in 6.b.(1)(ii)(A) and (B), above) are acceptable for estimating the IFSD rates and restartability for other types of engines, such as some totally new type of engine or unusual powerplant installation with features such as a novel fuel feed system. In the case of new or novel components, significant non-service experience may be required to validate the reliability predictions. This is typically attained through test and/or technology transfer analysis.

(v) Related issues that should be noted here are:

(A) CS 25.901(b)(2) sets an additional standard for installed engine reliability. This requirement is intended to ensure that all technologically feasible and economically practical means are used to

assure the continued safe operation of the powerplant installation between inspections and overhauls.

(B) The effectiveness of compliance with CS 25.111, CS 25.121 and CS 25.143 in meeting the intent of CS 25.901(c) for single engine thrust loss is dependent on the accuracy of the human factors assessment of the crew's ability to take appropriate corrective action. For the purposes of compliance with CS 25.901(c) in this area, it may be assumed that the crew will take the corrective actions called for in the aeroplane flight manual procedures and associated approved training.

(2) Multiple Engine IFSD. Typical engine IFSD rates may not meet the AC 25.1309-1B guidance that calls for 1 x 10^{-9} per hour for a catastrophic multiple engine IFSD. However, engine IFSD rates been part of the historically-accepted service experience upon which that guidance was based, and these IFSD rates are continuously improving. Consequently:

(i) Current typical turbine engine IFSD rates, and the resulting possibility of multiple independent IFSD's leading to a critical power loss, are considered inherently acceptable for compliance with CS 25.901(c) without the need for quantitative assessment.

(ii) Nevertheless, some combinations of failures within aircraft systems common to multiple engines may cause a catastrophic multiple engine thrust loss. These should be assessed to ensure that they meet the extremely improbable criteria. Systems to be considered include:

– fuel system,

– air data system,

– electrical power system,

– throttle assembly,

– engine indication systems, etc.

(iii) The means of compliance described above is only valid for turbine engines, and for engines that can demonstrate equivalent reliability to turbine engines, using the means outlined in Section 6.a. of this AMC. The approach to demonstrating equivalent reliability should be discussed early in the program with the Agency on a case-by-case basis.

c. Automatic Take-off Thrust Control System. CS-25, Appendix I ["Automatic Take-off Thrust Control System (ATTCS)"], specifies the minimum reliability levels for these automatic systems. In addition to showing compliance with these reliability levels for certain combinations of failures, other failure conditions that can arise as a result of introducing such a system must be shown to comply with CS 25.901(c)/CS 25.1309.

d. Thrust Management Systems. A System Safety Assessment is essential for any aeroplane system that aids the crew in managing engine thrust (i.e., computing target engine ratings, commanding engine thrust levels, etc.). As a minimum, the criticality and failure hazard classification must be assessed. The system criticality will depend on:

– the range of thrust management errors it could cause,

– the likelihood that the crew will detect these errors and take appropriate corrective action, and

– the severity of the effects of these errors with and without crew intervention.

The hazard classification will depend on the most severe effects anticipated from any system. The need for more in-depth analysis will depend upon the systems complexity, novelty, initial failure hazard classification, relationship to other aircraft systems, etc.

(1) Automated thrust management features, such as autothrottles and target rating displays, traditionally have been certified on the basis that they are only conveniences to reduce crew workload and do not relieve the crew of any responsibility for assuring proper thrust management. In some cases, malfunctions of these systems can be considered to be minor, at most. However, for this to be valid, even when the crew is no longer directly involved in performing a given thrust management function, the crew must be provided with information concerning unsafe system operating conditions to enable them to take appropriate corrective action.

(2) Consequently, when demonstrating compliance with CS 25.901(c)/CS 25.1309, failures within any automated thrust management feature which, if not detected and properly accommodated by crew action, could create a catastrophe should be either:

(i) considered a catastrophic failure condition when demonstrating compliance with CS 25.901(c)/CS 25.1309(b); or

(ii) considered an unsafe system operating condition when demonstrating compliance with the warning requirements of CS 25.1309(c).

e. Thrust Reverser. Compliance with CS 25.933(a) ("Reversing systems") provides demonstration of compliance with CS 25.901(c)/CS 25.1309 for the thrust reverser in-flight deployment failure conditions. A standard CS 25.901(c)/CS 25.1309 System Safety Assessment should be performed for any other thrust reverser-related failure conditions.

7. TYPICAL FAILURE CONDITIONS FOR POWERPLANT SYSTEM INSTALLATIONS.

The purpose of this section is to provide a list of typical failure conditions that may be applicable to a powerplant system installation. This list is by no means all-encompassing, but it captures some failure conditions that have been of concern in previous powerplant system installations. The specific failure conditions identified during the preliminary SSA for the installation should be reviewed against this list to assist in ensuring that all failure conditions have been identified and properly addressed.

As stated previously in this AMC, the assessment of these failure conditions may range from a simple report that offers descriptive details associated with a failure condition, interprets test results, compares two similar systems, or offers other qualitative information; to a detailed failure analysis that may include estimated numerical probabilities. The assessment criteria, process, analysis methods, validation, and documentation should be consistent with the guidance material contained in AMC 25.1309.

a. Fire Protection System - Failure Conditions:

(1) Loss of detection in the presence of a fire.

(2) Loss of extinguishing in the presence of a fire.

(3) Loss of fire zone integrity in the presence of a fire.

(4) Loss of flammable fluid shut-off or drainage capability in the presence of a fire.

(5) Creation of an ignition source outside a fire zone but in the presence of flammable fluids.

b. Fuel System -- Failure Conditions:

(1) Loss of fuel feed/fuel supply.

(2) Inability to control lateral and longitudinal balance.

(3) Hazardously misleading fuel indications.

(4) Loss of fuel tank integrity.

(5) Loss of fuel jettison.

(6) Uncommanded fuel jettison.

c. Powerplant Ice Protection - Failure Conditions:

(1) Loss of propeller, inlet, engine, or other powerplant ice protection on multiple powerplants when required.

(2) Loss of engine/powerplant ice detection.

(3) Activation of engine inlet ice protection above limit temperatures.

d. Propeller Control - Failure Conditions:

(1) Inadvertent fine pitch (overspeed, excessive drag).

(2) Inadvertent coarse pitch (over-torque, thrust asymmetry)

(3) Uncommanded propeller feathering.

(4) Failure to feather.

(5) Inadvertent application of propeller brake in flight.

(6) Unwanted reverse thrust (pitch).

e. Engine Control and Indication -- Failure Conditions:

(1) Loss of thrust.

(2) Loss of thrust control, including asymmetric thrust, thrust increases, thrust decreases, thrust fail fixed, and unpredictable engine operation.

(3) Hazardously misleading display of powerplant parameter(s).

f. Thrust Reverser - Failure Conditions:

(1) Inadvertent deployment of one or more reversers.

(2) Failure of one or more reversers to deploy when commanded.

(3) Failure of reverser component restraints (i.e., opening of D-ducts in flight, release of cascades during reverser operation, etc.).

[Amdt 25/1]

CS 25.903 Engines

ED Decision 2003/2/RM

(a) *Engine type certification.*

(1) reserved

(2) Any engine not certificated to CS-E must be shown to comply with CS-E 790 and CS-E 800 or be shown to have a foreign object ingestion service history in similar installation locations which has not resulted in any unsafe condition.

(b) *Engine isolation*. The powerplants must be arranged and isolated from each other to allow operation, in at least one configuration, so that the failure or malfunction of any engine, or of any system that can affect the engine, will not –

(1) Prevent the continued safe operation of the remaining engines; or

(2) Require immediate action by any crew member for continued safe operation.

(c) *Control of engine rotation*. There must be means for stopping the rotation of any engine individually in flight, except that, for turbine engine installations, the means for stopping the rotation of any engine need be provided only where continued rotation could jeopardise the safety of the aeroplane. Each component of the stopping system on the engine side of the firewall that might be exposed to fire must be at least fire resistant. If hydraulic propeller feathering systems are used for this purpose, the feathering lines must be at least fire-resistant under the operating conditions that may be expected to exist during feathering.

(d) *Turbine engine installations*. For turbine engine installations –

(1) Design precautions must be taken to minimise the hazards to the aeroplane in the event of an engine rotor failure or of a fire originating within the engine which burns through the engine case. (See AMC 25.903(d)(1) and AMC 20-128A.)

(2) The powerplant systems associated with engine control devices, systems, and instrumentation, must be designed to give reasonable assurance that those engine operating limitations that adversely affect turbine rotor structural integrity will not be exceeded in service.

(e) *Restart capability.*

(1) Means to restart any engine in flight must be provided.

(2) An altitude and airspeed envelope must be established for in-flight engine restarting, and each engine must have a restart capability within that envelope. (See AMC 25.903(e)(2).)

(3) For turbine engine powered aeroplanes, if the minimum windmilling speed of the engines, following the in-flight shutdown of all engines, is insufficient to provide the necessary electrical power for engine ignition, a power source independent of the engine-driven electrical power generating system must be provided to permit in-flight engine ignition for restarting.

AMC 25.903(d)(1) Torching Flames

ED Decision 2003/2/RM

Where design precautions to minimise the hazard in the event of a combustion chamber burnthrough involve the use of torching flame resistant components and/or materials, satisfaction of the standards prescribed in British Standards Institution Specification 3G100: Part 2: Section 3: Sub-section 3.13, dated December 1973, is acceptable.

AMC 25.903(e)(2) Engines

ED Decision 2003/2/RM

1 General

1.1 In general the relight envelope required in CS 25.903(e)(2) may consist of two zones –

a. One zone where the engine is rotated by windmilling at or beyond the minimum rpm to effect a satisfactory relight, and

b. Another zone where the engine is rotated with assistance of the starter at or beyond the minimum rpm to effect a satisfactory relight.

1.2 The minimum acceptable relight envelope is defined in paragraph 2.

2 Envelope of Altitude and Airspeed

2.1 Sufficient flight tests should be made over the range of conditions detailed in 2.2 and 2.3, to establish the envelope of altitude and airspeed for reliable engine restarts, taking into account the results of restart tests completed by the engine constructor on the same type of engine in an altitude test facility or flying test bed, if available, and the experience accumulated in other aircraft with the same engine. The effect of engine deterioration in service should be taken into account.

2.2 Altitude and Configuration. From sea-level to the maximum declared restarting altitude in all appropriate configurations likely to affect restarting, including the emergency descent configuration.

2.3 Airspeed. From the minimum to the maximum declared airspeed at all altitudes up to the maximum declared engine restarting altitude. The airspeed range of the declared relight envelope should cover at least 30 kt.

2.4 Delay Tests. The tests referred to in paragraph 2.2 should include the effect on engine restarting performance of delay periods between engine shut-down and restarting of –

a. Up to two minutes, and

b. At least fifteen minutes or until the engine oil temperatures are stabilised at their cold soak value.

CS 25.904 Automatic Takeoff Thrust Control System (ATTCS)

ED Decision 2003/2/RM

Aeroplanes equipped with an engine power control system that automatically resets the power or thrust on the operating engine(s) when any engine fails during the takeoff must comply with the requirements of Appendix I.

CS 25.905 Propellers

ED Decision 2003/2/RM

(a) *reserved*

(b) Engine power and propeller shaft rotational speed may not exceed the limits for which the propeller is certificated. (See CS-P 80.)

(c) Each component of the propeller blade pitch control system must meet the requirements of CS-P 200.

(d) Design precautions must be taken to minimise the hazards to the aeroplane in the event a propeller blade fails or is released by a hub failure. The hazards which must be considered include damage to structure and critical systems due to impact of a failed or released blade and the unbalance created by such failure or release. (See AMC 25.905(d).)

AMC 25.905(d) Release of Propeller Debris

ED Decision 2003/2/RM

1 *Propeller Installation*. Design features of the propeller installation, including its control system, which are considered to influence the occurrence of propeller debris release and/or mode of such a failure should be taken into account when assessing the aeroplane against CS 25.905(d).

2 *Aeroplane Design Conditions*

2.1 *Impact Damage Zone*. All practical precautions should be taken in the aeroplane design to minimise, on the basis of good engineering judgement, the risk of Catastrophic Effects due to the release of part of, or a complete propeller blade. These precautions should be taken within an impact zone defined by the region between the surfaces generated by lines passing through the centre of the propeller hub making angles of at least five degrees forward and aft of the plane of rotation of each propeller. Within this zone at least the following should be considered.

a. The vulnerability of critical components and systems (e.g. location, duplication, separation, protection); and

b. The fire risk in the event of flammable fluid release in association with potential ignition sources (e.g. location, protection, shut-off means).

2.2 *Other Considerations*. Consideration should be given to the effects on the aeroplane resulting from –

a. The likely out of balance forces due to the release of part of, or a complete propeller blade; and

b. Loss of a complete propeller.

CS 25.907 Propeller vibration

ED Decision 2003/2/RM

(See CS-P 190.)

(a) The magnitude of the propeller blade vibration stresses under any normal condition of operation must be determined by actual measurement or by comparison with similar installations for which these measurements have been made.

(b) The determined vibration stresses may not exceed values that have been shown to be safe for continuous operation.

CS 25.925 Propeller clearance

ED Decision 2003/2/RM

Unless smaller clearances are substantiated, propeller clearances with the aeroplane at maximum weight, with the most adverse centre of gravity, and with the propeller in the most adverse pitch position, may not be less than the following:

(a) *Ground clearance*. There must be a clearance of at least 18 cm (7 inches) (for each aeroplane with nose wheel landing gear) or (23 cm 9 inches (for each aeroplane with tail-wheel landing gear) between each propeller and the ground with the landing gear statically deflected and in the level take-off, or taxying attitude, whichever is most critical. In addition, there must be positive clearance between the propeller and the ground when in the level take-off attitude with the critical tyre(s) completely deflated and the corresponding landing gear strut bottomed.

(b) *Reserved*.

(c) *Structural clearance*. There must be –

(1) At least 25 mm (1·0 inche) radial clearance between the blade tips and the aeroplane structure, plus any additional radial clearance necessary to prevent harmful vibration;

(2) At least 13 mm (0·5 inches) longitudinal clearance between propeller blades or cuffs and stationary parts of the aeroplane; and

(3) Positive clearance between other rotating parts of the propeller or spinner and stationary parts of the aeroplane.

CS 25.929 Propeller de-icing

ED Decision 2003/2/RM

(a) For aeroplanes intended for use where icing may be expected, there must be a means to prevent or remove hazardous ice accumulation on propellers or on accessories where ice accumulation would jeopardise engine performance.

(b) If combustible fluid is used for propeller de-icing, CS 25.1181 to CS 25.1185 and CS 25.1189 apply.

AMC 25.929(a) Propeller de-icing

ED Decision 2003/2/RM

Where the propeller has been fitted to the engine in complying with the tests of AMC E 780, compliance with CS 25.929(a) will be assured.

CS 25.933 Reversing systems

ED Decision 2005/006/R

(a) For turbojet reversing systems -

(1) Each system intended for ground operation only must be designed so that either:

(i) The aeroplane can be shown to be capable of continued safe flight and landing during and after any thrust reversal in flight; or

(ii) It can be demonstrated that in-flight thrust reversal is extremely improbable and does not result from a single failure or malfunction.

(See AMC 25.933(a)(1))

(2) Each system intended for inflight use must be designed so that no unsafe condition will result during normal operation of the system, or from any failure (or reasonably likely combination of failures) of the reversing system, under any anticipated condition of operation of the aeroplane including ground operation. Failure of structural elements need not be considered if the probability of this kind of failure is extremely remote.

(3) Each system must have means to prevent the engine from producing more than idle thrust when the reversing system malfunctions, except that it may produce any greater forward thrust that is shown to allow directional control to be maintained, with aerodynamic means alone, under the most critical reversing condition expected in operation.

(b) For propeller reversing systems -

(1) Each system intended for ground operation only must be designed so that no single failure (or reasonably likely combination of failures) or malfunction of the system will result in unwanted reverse thrust under any expected operating condition. Failure of structural elements need not be considered if this kind of failure is extremely remote.

(2) Compliance with this paragraph may be shown by failure analysis or testing, or both, for propeller systems that allow propeller blades to move from the flight low-pitch position to a position that is substantially less than that at the normal flight low-pitch position. The analysis may include or be supported by the analysis made to show compliance with the requirements of CS-P 70 for the propeller and associated installation components.

[Amdt 25/1]

AMC 25.933(a)(1) Unwanted in-flight thrust reversal of turbojet thrust reversers

ED Decision 2005/006/R

1. PURPOSE.

This Acceptable Means of Compliance (AMC) describes various acceptable means, for showing compliance with the requirements of CS 25.933(a)(1), "Reversing systems", of CS-25. These means are intended to provide guidance to supplement the engineering and operational judgement that must form the basis of any compliance findings relative to in-flight thrust reversal of turbojet thrust reversers.

2. RELATED CERTIFICATION SPECIFICATIONS.

CS 25.111, CS 25.143, CS 25.251, CS 25.571, CS 25.901, CS 25.903, CS 25.1155, CS 25.1305, CS 25.1309, CS 25.1322 and CS 25.1529

3. APPLICABILITY.

The requirements of CS 25.933 apply to turbojet thrust reverser systems. CS 25.933(a) specifically applies to reversers intended for ground operation only, while CS 25.933(b) applies to reversers intended for both ground and in-flight use.

This AMC applies only to unwanted thrust reversal in flight phases when the landing gear is not in contact with the ground; other phases (i.e., ground operation) are addressed by CS 25.901(c) and CS 25.1309.

4. BACKGROUND.

4.a. General. Most thrust reversers are intended for ground operation only. Consequently, thrust reverser systems are generally sized and developed to provide high deceleration forces while avoiding foreign object debris (FOD) ingestion, aeroplane surface efflux impingement, and aeroplane handling difficulty during landing roll. Likewise, aircraft flight systems are generally sized and developed to provide lateral and directional

controllability margins adequate for handling qualities, manoeuvrability requirements, and engine-out VMC lateral drift conditions.

In early turbojet aeroplane designs, the combination of control system design and thrust reverser characteristics resulted in control margins that were capable of recovering from unwanted in-flight thrust reversal even on ground-use-only reversers; this was required by the previous versions of CS 25.933.

As the predominant large aeroplane configuration has developed into the high bypass ratio twin engine-powered model, control margins for the in-flight thrust reversal case have decreased. Clearly, whenever and wherever thrust reversal is intended, the focus must remain on limiting any adverse effects of thrust reversal. However, when demonstrating compliance with CS 25.933(a) or CS 25.933(b), the Authority has accepted that applicants may either provide assurance that the aeroplane is controllable after an in-flight thrust reversal event or that the unwanted in-flight thrust reversal event will not occur.

Different historical forms of the rule have attempted to limit either the effect or the likelihood of unwanted thrust reversal during flight. However, experience has demonstrated that neither method is always both practical and effective. The current rule, and this related advisory material, are intended to allow either of these assurance methods to be applied in a manner which recognises the limitations of each, thereby maximising both the design flexibility and safety provided by compliance with the rule.

4.b. Minimising Adverse Effects. The primary purpose of reversing systems, especially those intended for ground operation only, is to assist in decelerating the aeroplane during landing and during an aborted take-off. As such, the reverser must be rapid-acting and must be effective in producing sufficient reverse thrust. These requirements result in design characteristics (actuator sizing, efflux characteristics, reverse thrust levels, etc.) that, in the event of thrust during flight, could cause significant adverse effects on aeroplane controllability and performance.

If the effect of the thrust reversal occurring in flight produces an unacceptable risk to continued safe flight and landing, then the reverser operation and de-activation system must be designed to prevent unwanted thrust reversal. Alternatively, for certain aeroplane configurations, it may be possible to limit the adverse impacts of unwanted thrust reversal on aeroplane controllability and performance such that the risk to continued safe flight and landing is acceptable (discussed later in this AMC).

For reversing systems intended for operation in flight, the reverser system must be designed to adequately protect against unwanted in-flight thrust reversal.

CS 25.1309 and CS 25.901(c) and the associated AMC (AMC 25.1309 and AMC 25.901(c) provide guidance for developing and assessing the safety of systems at the design stage. This methodology should be applied to the total reverser system, which includes:

- the reverser;
- the engine (if it can contribute to thrust reversal);
- the reverser motive power source;
- the reverser control system;
- the reverser command system in the cockpit; and
- the wiring, cable, or linkage system between the cockpit and engine.

Approved removal, deactivation, reinstallation, and repair procedures for any element in the reverser or related systems should result in a safety level equivalent to the certified baseline system configuration.

Qualitative assessments should be done, taking into account potential human errors (maintenance, aeroplane operation).

Data required to determine the level of the hazard to the aeroplane in case of in-flight thrust reversal and, conversely, data necessary to define changes to the reverser or the aeroplane to eliminate the hazard, can be obtained from service experience, test, and/or analysis. These data also can be used to define the envelope for continued safe flight.

There are many opportunities during the design of an aeroplane to minimise both the likelihood and severity of unwanted in-flight thrust reversal. These opportunities include design features of both the aeroplane and the engine/reverser system. During the design process, consideration should be given to the existing stability and control design features, while preserving the intended function of the thrust reverser system.

Some design considerations, which may help reduce the risk from in-flight thrust reversal, include:

4.b.(1) Engine location to:

(i) Reduce sensitivity to efflux impingement.

(ii) Reduce effective reverse thrust moment arms

4.b.(2) Engine/Reverser System design to:

(i) Optimise engine/reverser system integrity and reliability.

(ii) Rapidly reduce engine airflow (i.e. auto-idle) in the event of an unwanted thrust reversal. Generally, such a feature is considered a beneficial safety item. In this case, the probability and effect of any unwanted idle command or failure to provide adequate reverse thrust when selected should be verified to be consistent with AMC 25.1309 and AMC 25.901(c).

(iii) Give consideration to the aeroplane pitch, yaw, and roll characteristics.

(iv) Consider effective efflux diameter.

(v) Consider efflux area.

(vi) Direct reverser efflux away from critical areas of the aeroplane.

(vii) Expedite detection of unwanted thrust reversal, and provide for rapid compensating action within the reversing system.

(viii) Optimise positive aerodynamic stowing forces.

(ix) Inhibit in-flight thrust reversal of ground-use-only reversers, even if commanded by the flight crew.

(x) Consider incorporation of a restow capability for unwanted thrust reversal.

4.b.(3) Airframe/System design to:

(i) Maximise aerodynamic control capability.

(ii) Expedite detection of thrust reversal, and provide for rapid compensating action through other airframe systems.

(iii) Consider crew procedures and responses.

The use of formal «lessons learned»-based reviews early and often during design development may help avoid repeating previous errors and take advantage of previous successes.

5. DEFINITIONS.

The following definitions apply for the purpose of this AMC:

a. Catastrophic: see AMC 25.1309

b. Continued Safe Flight and Landing: The capability for continued controlled flight and safe landing at an airport, possibly using emergency procedures, but without requiring exceptional pilot skill or strength. Some aeroplane damage may be associated with a failure condition, during flight or upon landing.

c. Controllable Flight Envelope and Procedure: An area of the Normal Flight Envelope where, given an appropriate procedure, the aeroplane is capable of continued safe flight and landing following an in-flight thrust reversal.

d. Deactivated Reverser: Any thrust reverser that has been deliberately inhibited such that it is precluded from performing a normal deploy/stow cycle, even if commanded to do so.

e. Exceptional Piloting Skill and/or Strength: Refer to CS 25.143(c) («Controllability and Manoeuvrability—General»).

f. Extremely Improbable: see AMC 25.1309

g. Extremely Remote: see AMC 25.1309

h. Failure: see AMC 25.1309

i. Failure Situation: All failures that result in the malfunction of one independent command and/or restraint feature that directly contributes to the top level Fault Tree Analysis event (i.e., unwanted in-flight thrust reversal). For the purpose of illustration, Figure 1, below, provides a fault tree example for a scenario of three «failure situations» leading to unwanted in-flight thrust reversal.

Figure 1: TOP EVENT

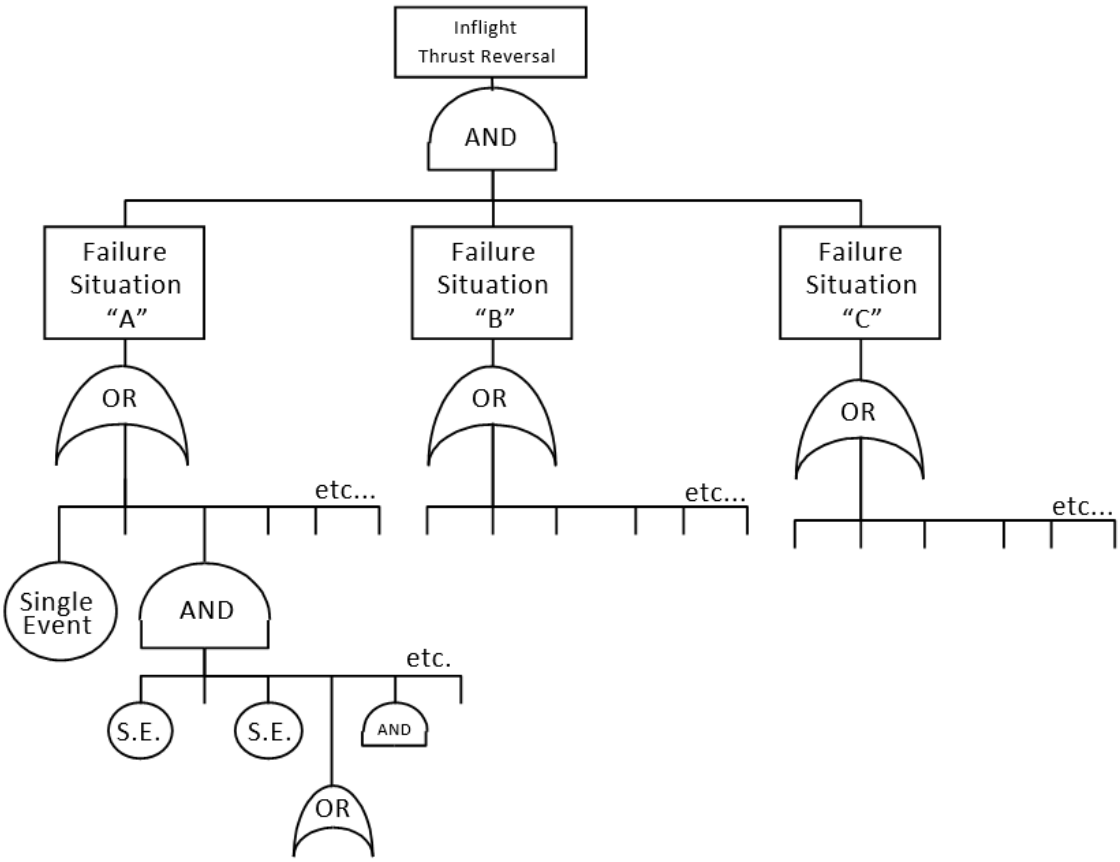

Reverser System with three independent command/restraint features shown for reference only.

j. Hazardous: see AMC 25.1309

k. In-flight: that part of aeroplane operation beginning when the wheels are no longer in contact with the ground during the take-off and ending when the wheels again contact the ground during landing.

l. Light Crosswind: For purposes of this AMC, a light crosswind is a 19 km/h (10 Kt). wind at right angles to the direction of take-off or landing which is assumed to occur on every flight.

m. Light Turbulence: Turbulence that momentarily causes slight, erratic changes in altitude and/or attitude (pitch, roll, and/or yaw), which is assumed to occur on every flight.

n. Major: see AMC 25.1309

o. Maximum exposure time: The longest anticipated period between the occurrence and elimination of the failure.

p. Normal Flight Envelope: An established boundary of parameters (velocity, altitude, angle of attack, attitude) associated with the practical and routine operation of a specific aeroplane that is likely to be encountered on a typical flight and in combination with prescribed conditions of light turbulence and light crosswind.

q. Pre-existing failure: Failure that can be present for more than one flight.

r. Thrust Reversal: A movement of all or part of the thrust reverser from the forward thrust position to a position that spoils or redirects the engine airflow.

s. Thrust Reverser System: Those components that spoil or redirect the engine thrust to decelerate the aeroplane. The components include:

– the engine-mounted hardware,

– the reverser control system,

– indication and actuation systems, and

– any other aeroplane systems that have an effect on the thrust reverser operation.

t. Turbojet thrust reversing system: Any device that redirects the airflow momentum from a turbojet engine so as to create reverse thrust. Systems may include:

– cascade-type reversers,

– target or clamshell-type reversers,

– pivoted-door petal-type reversers,

– deflectors articulated off either the engine cowling or aeroplane structure,

– targetable thrust nozzles, or

– a propulsive fan stage with reversing pitch.

u. Turbojet (or turbofan): A gas turbine engine in which propulsive thrust is developed by the reaction of gases being directed through a nozzle.

6. DEMONSTRATING COMPLIANCE WITH CS 25.933(a).

The following Sections 7 through 10 of this AMC provide guidance on specific aspects of compliance with CS 25.933(a), according to four different means or methods:

– Controllability (Section 7),

– Reliability (Section 8),

– Mixed controllability / reliability (Section 9),

– Deactivated reverser (Section 10).

7. «CONTROLLABILITY OPTION»: PROVIDE CONTINUED SAFE FLIGHT AND LANDING FOLLOWING ANY IN-FLIGHT THRUST REVERSAL.

The following paragraphs provide guidance regarding an acceptable means of demonstrating compliance with CS 25.933(a)(1).

7.a. General. For compliance to be established with CS 25.933(a) by demonstrating that the aeroplane is capable of continued safe flight and landing following any in-flight thrust reversal (the «controllability option» provided for under CS 25.933(a)(1)), the aspects of structural integrity, performance, and handling qualities must be taken into account. The level of accountability should be appropriate to the probability of in-flight thrust reversal, in accordance with the following sections.

To identify the corresponding failure conditions and determine the probability of their occurrence, a safety analysis should be carried out, using the methodology described in CS 25.1309. The reliability of design features, such as auto-idle and automatic control

configurations critical to meeting the following controllability criteria, also should be considered in the safety analysis.

Appropriate alerts and/or other indications should be provided to the crew, as required by CS 25.1309(c) (Ref. AMC 25.1309).

The inhibition of alerts relating to the thrust reverser system during critical phases of flight should be evaluated in relation to the total effect on flight safety (Ref. AMC 25.1309).

Thrust reversal of a cyclic or erratic nature (e.g., repeated deploy/stow movement of the thrust reverser) should be considered in the safety analysis and in the design of the alerting/indication systems.

Input from the flight crew and human factors specialists should be considered in the design of the alerting and/or indication provisions.

The controllability compliance analysis should include the relevant thrust reversal scenario that could be induced by a rotorburst event.

When demonstrating compliance using this «controllability option» approach, if the aeroplane might experience an in-flight thrust reversal outside the «controllable flight envelope» anytime during the entire operational life of all aeroplanes of this type, then further compliance considerations as described in Section 9 («MIXED CONTROLLABILITY / RELIABILITY OPTION») of this AMC, below, should be taken into account.

7.b. Structural Integrity. For the «controllability option,» the aeroplane must be capable of successfully completing a flight during which an unwanted in-flight thrust reversal occurs. An assessment of the integrity of the aeroplane structure is necessary, including an assessment of the structure of the deployed thrust reverser and its attachments to the aeroplane.

In conducting this assessment, the normal structural loads, as well as those induced by failures and forced vibration (including buffeting), both at the time of the event and for continuation of the flight, must be shown to be within the structural capability of the aeroplane.

At the time of occurrence, starting from 1-g level flight conditions, at speeds up to V_C, a realistic scenario, including pilot corrective actions, should be established to determine the loads occurring at the time of the event and during the recovery manoeuvre. The aeroplane should be able to withstand these loads multiplied by an appropriate factor of safety that is related to the probability of unwanted in-flight thrust reversal. The factor of safety is defined in Figure 2, below. Conditions with high lift devices deployed also should be considered at speeds up to the appropriate flap limitation speed.

Figure 2: Factor of safety at the time of occurrence

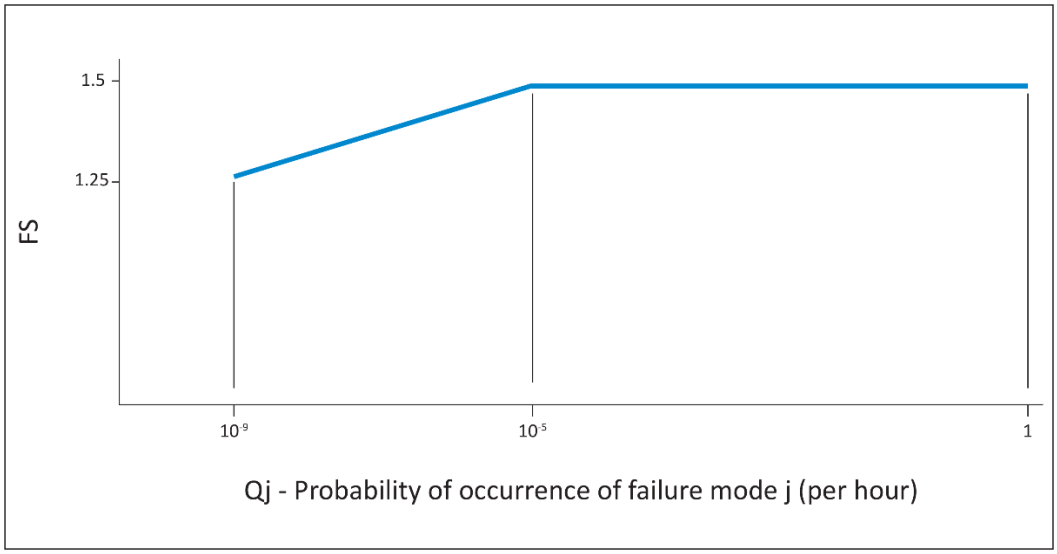

For continuation of the flight following in-flight thrust reversal, considering any appropriate reconfiguration and flight limitations, the following apply:

7.b.(1) Static strength should be determined for loads derived from the following conditions at speeds up to V_C, or the speed limitation prescribed for the remainder of the flight:

(i) 70% of the limit flight manoeuvre loads; and separately

(ii) the discrete gust conditions specified in CS 25.341(a) (but using 40% of the gust velocities specified for V_C).

7.b.(2) For the aeroplane with high lift devices deployed, static strength should be determined for loads derived from the following conditions at speeds up the appropriate flap design speed, or any lower flap speed limitation prescribed for the remainder of the flight:

(i) A balanced manoeuvre at a positive limit load factor of 1.4; and separately

(ii) the discrete gust conditions specified in CS 25.345(a)(2) (but using 40% of the gust velocities specified).

7.b.(3) For static strength substantiation, each part of the structure must be able to withstand the loads specified in sub-paragraph 7.b.(1) and 7.b.(2) of this paragraph, multiplied by a factor of safety depending on the probability of being in this failure state. The factor of safety is defined in Figure 3, below.

Figure 3: Factor of safety for continuation of flight

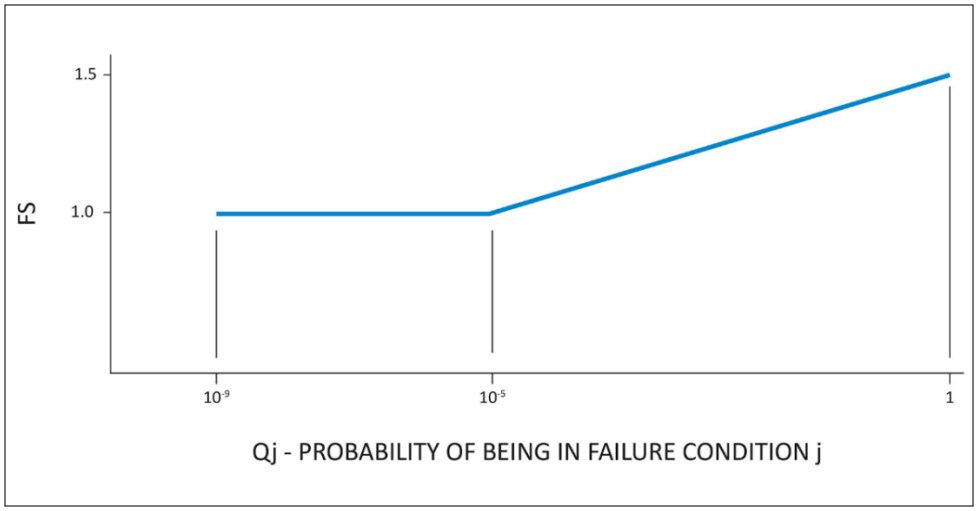

Qj = is the probability of being in the configuration with the unwanted in-flight thrust reversal

Qj = (Tj)(Pj) where:

Tj = average time spent with unwanted in-flight thrust reversal (in hours)

Pj = probability of occurrence of unwanted in-flight thrust reversal (per hour)

If the thrust reverser system is capable of being restowed following a thrust reversal, only those loads associated with the interval of thrust reversal need to be considered. Historically, thrust reversers have often been damaged as a result of unwanted thrust reversal during flight. Consequently, any claim that the thrust reverser is capable of being restowed must be adequately substantiated, taking into account this adverse service history.

7.c. Performance

7.c.(1) General Considerations: Most failure conditions that have an effect on performance are adequately accounted for by the requirements addressing a «regular» engine failure (i.e., involving only loss of thrust and not experiencing any reverser anomaly). This is unlikely to be the case for failures involving an unwanted in-flight thrust reversal, which can be expected to have a more adverse impact on thrust and drag than a regular engine failure. Such unwanted in-flight thrust reversals, therefore, should be accounted for specifically, to a level commensurate with their probability of occurrence.

The performance accountability that should be provided is defined in Sections 7.c.(2) and 7.c.(3) as a function of the probability of the unwanted in-flight thrust reversal. Obviously, for unwanted in-flight thrust reversals less probable than $1x10^{-9}$ /fh, certification may be based on reliability alone, as described in Section 8 («RELIABILITY OPTION») of this AMC. Furthermore, for any failure conditions where unwanted in-flight thrust reversal would impact safety, the aeroplane must meet the safety/reliability criteria delineated in CS 25.1309.

7.c.(2) Probability of unwanted in-flight thrust reversal greater than $1x10^{-7}$/fh: Full performance accountability must be provided for the more critical of a regular engine failure and an unwanted in-flight thrust reversal.

To determine if the unwanted in-flight thrust reversal is more critical than a regular engine failure, the normal application of the performance requirements described in CS-25, Subpart B, as well as the applicable operating requirements, should be compared to the application of the following criteria, which replace the accountability for a critical engine failure with that of a critical unwanted in-flight thrust reversal:

– CS 25.111, «Take-off path»: The takeoff path should be determined with the critical unwanted thrust reversal occurring at V_{LOF} instead of the critical engine failure at V_{EF}. No change to the state of the engine with the thrust reversal that requires action by the pilot may be made until the aircraft is 122 m (400 ft) above the takeoff surface.

– CS 25.121, «Climb: one-engine-inoperative»: Compliance with the one-engine-inoperative climb gradients should be shown with the critical unwanted in-flight thrust reversal rather than the critical engine inoperative.

– CS 25.123, «En-route flight paths»: The en-route flight paths should be determined following occurrence of the critical unwanted in-flight thrust reversal(s) instead of the critical engine failure(s), and allowing for the execution of appropriate crew procedures. For compliance with the applicable operating rules, an unwanted in-flight thrust reversal(s) at the most critical point en-route should be substituted for the engine failure at the most critical point en-route.

Performance data determined in accordance with these provisions, where critical, should be furnished in the Aeroplane Flight Manual as operating limitations.

Operational data and advisory data related to fuel consumption and range should be provided for the critical unwanted in-flight thrust reversal to assist the crew in decision making. These data may be supplied as simple factors or additives to apply to normal all-engines-operating fuel consumption and range data. For approvals to conduct extended range operations with two-engine aeroplanes (ETOPS), the critical unwanted in-flight thrust reversal should be considered in the critical fuel scenario (paragraph 10d(4)(iii) of Information Leaflet no. 20: ETOPS).

In addition to requiring full performance accountability as it relates to the specific aeroplane performance requirements of Subpart B, all other aspects of the aeroplane's performance following a non-restowable in-flight thrust reversal (e.g. capability to climb and maintain 305m (1000 feet) AGL) must be found adequate to comply with the intent of CS 25.933(a)(1)(ii).

7.c.(3) Probability of unwanted in-flight thrust reversal equal to or less than $1x10^{-7}$/fh, but greater than $1x10^{-9}$/fh: With the exception of the takeoff phase of flight, which needs not account for unwanted in-flight thrust reversal, the same criteria should be applied as in Section 7.c.(2), above, for the purposes of providing advisory data and procedures to the flight crew. Such performance data, however, need not be applied as operating limitations. The takeoff data addressed by Section 7.c.(2), above (takeoff speeds, if limited by V_{MC}, takeoff path, and takeoff climb gradients), does not need to be provided, as it would be of only limited usefulness if not applied as a dispatch limitation.

However, the takeoff data should be determined and applied as operating limitations if the unwanted in-flight thrust reversal during the take-off phase is the result of a single failure.

As part of this assessment, the effect of an unwanted in-flight thrust reversal on approach climb performance, and the ability to execute a go-around manoeuvre should be determined and used to specify crew procedures for an approach and landing following a thrust reversal. For example, the procedures may specify the use of a flap setting less than that specified for landing, or an airspeed greater than the stabilised final approach airspeed, until the flight crew is satisfied that a landing is assured and a go-around capability need no longer be maintained. Allowance may be assumed for execution of appropriate crew procedures subsequent to the unwanted thrust reversal having occurred. Where a number of thrust reversal states may occur, these procedures for approach and landing may, at the option of the applicant, be determined either for the critical thrust reversal state or for each thrust reversal state that is clearly distinguishable by the flight crew.

Operational data and advice related to fuel consumption and range should be provided for the critical unwanted in-flight thrust reversal to assist the crew in decision-making. These data may be supplied as simple factors or additives to apply to normal all-engines-operating fuel consumption and range data.

The aeroplane performance capabilities following a non-restowable in-flight thrust reversal must be such that the probability of preventing continued safe flight (e.g. capability to climb and maintain 305m (1000 feet) AGL) and landing at an airport (i.e. either destination or diversion) is extremely improbable.

7.d. Handling Qualities

7.d.(1) Probability of unwanted in-flight thrust reversal greater than $1x10^{-7}$/fh: The more critical of an engine failure (or flight with engine(s) inoperative), and an unwanted in-flight thrust reversal, should be used to show compliance with the controllability and trim requirements of CS-25, Subpart B. In addition, the criteria defined in Section 7.d.(2), below, also should be applied. To determine if the unwanted in-flight thrust reversal is more critical than an engine failure, the normal application of the CS-25, Subpart B, controllability and trim requirements should be compared to the application of the following criteria, which replace the accountability for a critical engine failure with that of a critical unwanted in-flight thrust reversal:

– CS 25.143, «Controllability and Manoeuvrability - General»: the effect of a sudden unwanted in-flight thrust reversal of the critical engine, rather than the sudden failure of the critical engine, should be evaluated in accordance with CS 25.143(b)(1) and the associated guidance material.

  Control forces associated with the failure should comply with CS 25.143(c).

– CS 25.147, «Directional and lateral control»: the requirements of CS 25.147(a), (b), (c), and (d) should be complied with following critical unwanted in-flight thrust reversal(s) rather than with one or more engines inoperative.

– CS 25.149, «Minimum control speed»: the values of V_{MC} and V_{MCL} should be determined with a sudden unwanted in-flight thrust reversal of the critical engine rather than a sudden failure of the critical engine.

– CS 25.161, «Trim» the trim requirements of CS 25.161(d) and (e)should be complied with following critical unwanted in-flight thrust reversal(s), rather than with one or more engines inoperative.

Compliance with these requirements should be demonstrated by flight test. Simulation or analysis will not normally be an acceptable means of compliance for such probable failures.

7.d.(2) Probability of unwanted thrust reversal equal to or less than $1x10^{-7}$/fh, but greater than $1x10^{-9}$/fh: failure conditions with a probability equal to or less than $1x10^{-7}$/fh are not normally evaluated against the specific controllability and trim requirements of CS-25, Subpart B. Instead, the effects of unwanted in-flight thrust reversal should be evaluated on the basis of maintaining the capability for continued safe flight and landing, taking into account pilot recognition and reaction time. One exception is that the minimum control speed requirement of CS 25.149 should be evaluated to the extent necessary to support the performance criteria specified in Section 7.c.(3), above, related to approach, landing, and go-around.

Recognition of the failure may be through the behaviour of the aircraft or an appropriate failure alerting system, and the recognition time should not be less than one second. Following recognition, additional pilot reaction times should be taken into account, prior to any corrective pilot actions, as follows:

– Landing: no additional delay

– Approach: 1 second

– Climb, cruise, and descent: 3 seconds; except when in auto-pilot engaged manoeuvring flight, or in manual flight, when 1 second should apply.

Both auto-pilot engaged and manual flight should be considered.

The unwanted in-flight thrust reversal should not result in any of the following:

– exceedance of an airspeed halfway between V_{MO} and V_{DF}, or Mach Number halfway between M_{MO} and M_{DF}

– a stall

– a normal acceleration less than a value of 0g

– bank angles of more than 60° en-route, or more than 30° below a height of 305m (1000 ft)

– degradation of flying qualities assessed as greater than Major for unwanted in-flight thrust reversal more probable than 1x10-7/fh; or assessed as greater than Hazardous for failures with a probability equal to or less than $1x10^{-7}$/fh, but greater $1x10^{-9}$/fh

– the roll control forces specified in CS 25.143(c), except that the long term roll control force should not exceed 10 lb

– structural loads in excess of those specified in Section 7.b., above.

Demonstrations of compliance may be by flight test, by simulation, or by analysis suitably validated by flight test or other data.

7.d.(3) Probability of in-flight thrust reversal less than $1x10^{-9}$/fh: Certification can be based on reliability alone as described in Section 8, below.

8. «RELIABILITY OPTION»: PROVIDE CONTINUED SAFE FLIGHT AND LANDING BY PREVENTING ANY IN-FLIGHT THRUST REVERSAL

The following paragraphs provide guidance regarding an acceptable means of demonstrating compliance with CS 25.933(a)(1)(ii).

8.a. General. For compliance to be established with CS 25.933(a) by demonstrating that unwanted in-flight thrust reversal is not anticipated to occur (the «reliability option» provided for under CS 25.933(a)(1)(ii)), the aspects of system reliability, maintainability, and fault tolerance; structural integrity; and protection against zonal threats such as uncontained engine rotor failure or fire must be taken into account.

8.b. System Safety Assessment (SSA): Any demonstration of compliance should include an assessment of the thrust reverser control, indication and actuation system(s), including all interfacing power-plant and aeroplane systems (such as electrical supply, hydraulic supply, flight/ground status signals, thrust lever position signals, etc.) and maintenance.

The reliability assessment should include:

– the possible modes of normal operation and of failure;

– the resulting effect on the aeroplane considering the phase of flight and operating conditions;

– the crew awareness of the failure conditions and the corrective action required;

– failure detection capabilities and maintenance procedures, etc.; and

– the likelihood of the failure condition.

Consideration should be given to failure conditions being accompanied or caused by external events or errors.

The SSA should be used to identify critical failure paths for the purpose of conducting in-depth validation of their supporting failure mode, failure rates, exposure time, reliance on redundant subsystems, and assumptions, if any. In addition, the SSA can be used to determine acceptable time intervals for any required maintenance intervals (ref. AMC 25.1309 and AMC 25.19).

The primary intent of this approach to compliance is to improve safety by promoting more reliable designs and better maintenance, including minimising pre-existing faults. However, it also recognises that flexibility of design and maintenance are necessary for practical application.

8.b.(1) The thrust reverser system should be designed so that any in-flight thrust reversal that is not shown to be controllable in accordance with Section 7,above, is extremely improbable (i.e., average probability per hour of flight of the order of $1x10^{-9}$/fh. or less) and does not result from a single failure or malfunction. And

8.b.(2) For configurations in which combinations of two-failure situations (ref. Section 5, above) result in in-flight thrust reversal, the following apply:

Neither failure may be pre-existing (i.e., neither failure situation can be undetected or exist for more than one flight); the means of failure detection must be appropriate in consideration of the monitoring device reliability, inspection intervals, and procedures.

The occurrence of either failure should result in appropriate cockpit indication or be self-evident to the crew to enable the crew to take necessary actions such as

discontinuing a take-off, going to a controllable flight envelope en-route, diverting to a suitable airport, or reconfiguring the system in order to recover single failure tolerance, etc. And

8.b.(3) For configurations in which combinations of three or more failure situations result in in-flight thrust reversal, the following applies:

In order to limit the exposure to pre-existing failure situations, the maximum time each pre-existing failure situation is expected to be present should be related to the frequency with which the failure situation is anticipated to occur, such that their product is 1x10-3/fh or less.

The time each failure situation is expected to be present should take into account the expected delays in detection, isolation, and repair of the causal failures.

8.c. Structural Aspects: For the «reliability option,» those structural load paths that affect thrust reversal should be shown to comply with the static strength, fatigue, damage tolerance, and deformation requirements of CS-25. This will ensure that unwanted in-flight thrust reversal is not anticipated to occur due to failure of a structural load path, or due to loss of retention under ultimate load throughout the operational life of the aeroplane.

8.d. Uncontained Rotor Failure: In case of rotor failure, compliance with CS 25.903(d)(1) should be shown, using advisory materials (AC, user manual, etc.) supplemented by the methods described below. The effects of associated loads and vibration on the reverser system should be considered in all of the following methods of minimising hazards:

8.d.(1) Show that engine spool-down characteristics or potential reverser damage are such that compliance with Section 7, above, can be shown.

8.d.(2) Show that forces that keep the thrust reverser in stable stowed position during and after the rotor burst event are adequate.

8.d.(3) Locate the thrust reverser outside the rotor burst zone.

8.d.(4) Protection of thrust reverser restraint devices: The following guidance material describes methods of minimising the hazard to thrust reverser stow position restraint devices located within rotorburst zones. The following guidance material has been developed on the basis of all of the data available to date and engineering judgement.

8.d.(4)(i) Fragment Hazard Model:

(A) Large Fragments

– Ring Disks (see Figure 4.a.) - Compressor drum rotors or spools with ring disks have typically failed in a rim peeling mode when failure origins are in the rim area. This type of failure typically produces uncontained fragment energies, which are mitigated by a single layer of conventional aluminium honeycomb structure. (Note: This guidance material is based upon field experience and, as such, its application should be limited to aluminium sheet and honeycomb fan reverser construction. Typical construction consists of 12.7 mm (a half inch) thickness of .003-.004” aluminium foil honeycomb with .030" thick aluminium facing sheets. Alternative materials and methods of construction should have at least equivalent impact energy

absorption characteristics). Failures with the origins in the bore of these same drum sections have resulted in fragments which can be characterised as a single 1/3 disk fragment and multiple smaller fragments. The 1/3 disk fragment may or may not be contained by the thrust reverser structure. The remaining intermediate and small disk fragments, while escaping the engine case, have been contained by the thrust reverser structure.

– Deep Bore Disks (see Figure 4.b.) and Single Disks (see Figure 4.c.) - For compressor drum rotors or spools with deep bore disks, and single compressor and turbine disks, the experience, while limited, indicates either a 1/3 and a 2/3 fragment, or a 1/3 fragment and multiple intermediate and small discrete fragments should be considered. These fragments can be randomly released within an impact area that ranges * 5 degrees from the plane of rotation.

(B) Small Fragments (Debris)

Consider small fragments (reference AMC 20-128A, paragraph 9.d.) that could impact the thrust reverser at * 15 degrees axial spread angle.

8.d.(4)(ii) Minimisation:

Minimisation guidance provided below is for fragments from axial flow rotors surrounded by fan flow thrust reversers located over the intermediate or high-pressure core rotors.

NOTE: See attached Figure 5: Typical High Bypass Turbofan Low and High Pressure Compressor with Fan Thrust Reverser Cross Section

(A) Large Fragments

For the large fragments defined in Section 8.d.(4)(i)(A), above, the thrust reverser retention systems should be redundant and separated as follows:

– Ring Disks Compressor Spools:

Retention systems located in the outer barrel section of the thrust reverser should be separated circumferentially (circumferential distance greater than the 1/3 disk fragment model as described in AMC20 128A) or axially (outside the * 5 degree impact area) so that a 1/3 disk segment can not damage all redundant retention elements and allow thrust reversal (i.e., deployment of a door or translating reverser sleeve half). Retention systems located between the inner fan flow path wall and the engine casing should be located axially outside the + 5 degree impact area.

– Deep-bore Disk Spools and Single Disks:

Retention systems should be separated axially with at least one retention element located outside the * 5 degree impact area.

(B) Small Fragments

For the small fragments defined in Section 8.d.(4)(i)(B), above, thrust reverser retention systems should be provided with either:

– At least one retention element shielded in accordance with AMC 20-128A, paragraph 7(c), or capable of maintaining its retention capabilities after impact; or

– One retention element located outside the * 15 degree impact area.

9. «MIXED CONTROLLABILITY / RELIABILITY» OPTION.

If the aeroplane might experience an unwanted in-flight thrust reversal outside the «controllable flight envelope» anytime during the entire operational life of all aeroplanes of this type, then outside the controllable envelope reliability compliance must be shown, taking into account associated risk exposure time and the other considerations described in Section 8, above.

Conversely, if reliability compliance is selected to be shown within a given limited flight envelope with associated risk exposure time, then outside this envelope controllability must be demonstrated taking into account the considerations described in Section 7, above.

Mixed controllability/reliability compliance should be shown in accordance with guidance developed in Sections 7 and 8, above, respectively.

10. DEACTIVATED REVERSER.

The thrust reverser system deactivation design should follow the same «fail-safe» principles as the actuation system design, insofar as failure and systems/hardware integrity. The effects of thrust reverser system deactivation on other aeroplane systems, and on the new configuration of the thrust reverser system itself, should be evaluated according to Section 8.a., above. The location and load capability of the mechanical lock-out system (thrust reverser structure and lock-out device) should be evaluated according to Sections 8.b. and 8.d., above. The evaluation should show that the level of safety associated with the deactivated thrust reverser system is equivalent to or better than that associated with the active system.

11. CS 25.933(b) COMPLIANCE.

For thrust reversing systems intended for in-flight use, compliance with CS 25.933(b) may be shown for unwanted in-flight thrust reversal, as appropriate, using the methods specified in Sections 7 through 10, above.

12. CONTINUED AIRWORTHINESS.

12.a. Manufacturing/Quality: Due to the criticality of the thrust reverser, manufacturing and quality assurance processes should be assessed and implemented, as appropriate, to ensure the design integrity of the critical components.

12.b. Reliability Monitoring: An appropriate system should be implemented for the purpose of periodic monitoring and reporting of in-service reliability performance. The system should also include reporting of in-service concerns related to design, quality, or maintenance that have the potential of affecting the reliability of the thrust reverser.

12.c. Maintenance and Alterations: The following material provides guidance for maintenance designs and activity to assist in demonstrating compliance with Sections 7 through 10, above (also reference CS 25.901(b)(2) and CS 25.1529/Appendix H). The criticality of the

thrust reverser and its control system requires that maintenance and maintainability be emphasised in the design process and derivation of the maintenance control program, as well as subsequent field maintenance, repairs, or alterations.

12.c.(1) Design: Design aspects for providing adequate maintainability should address :

12.c.(1)(i) Ease of maintenance. The following items should be taken into consideration:

- It should be possible to operate the thrust reverser for ground testing/trouble shooting without the engine operating.
- Lock-out procedures (deactivation for flight) of the thrust reverser system should be simple, and clearly described in the maintenance manual. Additionally, a placard describing the procedure may be installed in a conspicuous place on the nacelle.
- Provisions should be made in system design to allow easy and safe access to the components for fault isolation, replacement, inspection, lubrication, etc. This is particularly important where inspections are required to detect latent failures. Providing safe access should include consideration of risks both to the mechanic and to any critical design elements that might be inadvertently damaged during maintenance.
- Provisions should be provided for easy rigging of the thrust reverser and adjustment of latches, switches, actuators, etc.

12.c.(1)(ii) Fault identification and elimination:

- System design should allow simple, accurate fault isolation and repair.
- System design personnel should be actively involved in the development, documentation, and validation of the troubleshooting/fault isolation manual and other maintenance publications. The systems design personnel should verify that maintenance assumptions critical to any SSA conclusion are supported by these publications (e.g., perform fault insertion testing to verify that the published means of detecting, isolating, and eliminating the fault are effective).
- Thrust reverser unstowed and unlocked indications should be easily discernible during pre-flight inspections.
- If the aeroplane has onboard maintenance monitoring and recording systems, the system should have provisions for storing all fault indications. This would be of significant help to maintenance personnel in locating the source of intermittent faults.

12.c.(1)(iii) Minimisation of errors: Minimisation of errors during maintenance activity should be addressed during the design process. Examples include physical design features, installation orientation markings, dissimilar connections, etc. The use of a formal «lessons learned»-based review early and often during design development may help avoid repeating previous errors.

12.c.(1)(iv) System Reliability: The design process should, where appropriate, use previous field reliability data for specific and similar components to ensure system design reliability.

12.c.(2) Maintenance Control:

12.c.(2)(i) Maintenance Program: The development of the initial maintenance plan for the aeroplane, including the thrust reverser, should consider, as necessary, the following:

– Involvement of the manufacturers of the aeroplane, engine, and thrust reverser.

– The compatibility of the SSA information and the Maintenance Review Board Report, Maintenance Planning Document, Master Minimum Equipment List, etc. (ref AMC 25.19).

– Identification by the manufacturer of all maintenance tasks critical to continued safe flight. The operator should consider these tasks when identifying and documenting Required Inspection Items.

– The complexity of lock-out procedures and appropriate verification.

– Appropriate tests, including an operational tests, of the thrust reverser to verify correct system operation after the performance of any procedure that would require removal, installation, or adjustment of a component; or disconnection of a tube, hose, or electrical harness of the entire thrust reverser actuation control system.

12.c.(2)(ii) Training: The following considerations should be taken into account when developing training documentation:

– The reason and the significance of accomplishing critical tasks as prescribed. This would clarify why a particular task needs to be performed in a certain manner.

– Instructions or references as to what to do if the results of a check or operational test do not agree with those given in the Aeroplane Maintenance Manual (AMM). The manual should recommend some corrective action if a system fails a test or check. This would help ensure that the critical components are not overlooked in the trouble shooting process.

– Emphasis on the total system training by a single training source (preferably the aeroplane manufacturer) to preclude fragmented information without a clear system understanding. This training concept should be used in the initial training and subsequent retraining.

– Inclusion of fault isolation and troubleshooting using the material furnished for the respective manuals.

– Evaluation of the training materials to assure consistency between the training material and the maintenance and troubleshooting manuals.

12.c.(2)(iii) Repairs and Alterations: The Instructions for Continued Airworthiness essential to ensure that subsequent repairs or alterations do not

unintentionally violate the integrity of the original thrust reverser system type design approval should be provided by the original airframe manufacturer. Additionally, the original airframe manufacturer should define a method of ensuring that this essential information will be evident to those that may perform and approve such repairs and alterations. One example would be maintaining the wire separation between relevant thrust reverser control electrical circuits. This sensitivity could be communicated by statements in appropriate manuals such as the Wiring Diagram Manual, and by decals or placards placed on visible areas of the thrust reverser and/or aeroplane structure.

12.c.(2)(iv) Feedback of Service Experience: The maintenance process should initiate the feedback of service experience that will allow the monitoring of system reliability performance and improvements in system design and maintenance practices. Additionally, this service experience should be used to assure the most current and effective formal «lessons learned» design review process possible.

(A) Reliability Performance:

(Operators and Manufacturers should collaborate on these items:)

– Accurate reporting of functional discrepancies.

– Service investigation of hardware by manufacturer to confirm and determine failure modes and corrective actions if required.

– Update of failure rate data. (This will require co-ordination between the manufacturers and airlines.)

(B) Improvements suggested by maintenance experience:

(This will provide data to effectively update these items:)

– Manuals

– Troubleshooting

– Removal/replacement procedures.

12.c.(2)(v) Publications/Procedures: The following considerations should be addressed in the preparation and revisions of the publications and procedures to support the thrust reverser in the field in conjunction with CS 25.901(b)(2) and CS 25.1529(Appendix H).

(A) Documentation should be provided that describes a rigging check, if required after adjustment of any thrust reverser actuator drive system component.

(B) Documentation should be provided that describes powered cycling of the thrust reverser to verify system integrity whenever maintenance is performed. This could also apply to any manual actuation of the reverser.

(C) The reasons and the significance of accomplishing critical tasks should be included in the AMM.

(D) The AMM should include instructions or references as to what to do if the results of a check or operational test do not agree with those given in the AMM.

(E) Provisions should be made to address inefficiencies and errors in the publications:

– Identified in the validation process of both critical and troubleshooting procedures.

– Input from field.

– Operators conferences.

(F) Development of the publications should be a co-ordinated effort between the thrust reverser, engine, aeroplane manufacturers and airline customers especially in the areas of:

– AMM

– Troubleshooting

– Fault isolation

– Maintenance data computer output

– Procedure Validation

– Master Minimum Equipment List

(G) Initial issue of the publication should include the required serviceable limits for the complete thrust reverser system.

13. FLIGHT CREW TRAINING.

In the case of compliance with the «controllability option,» and when the nature of the in-flight thrust reversal is judged as unusual (compared to expected consequences on the aeroplane of other failures, both basic and recurrent), flight crew training should be considered on a training simulator representative of the aeroplane, that is equipped with thrust reverser in-flight modelisation to avoid flight crew misunderstandings:

13.a. Transient manoeuvre: Recovery from the unwanted in-flight thrust reversal.

13.b Continued flight and landing: Manoeuvring appropriate to the recommended procedure (included trim and unattended operation) and precision tracking (ILS guide slope tracking, speed/altitude tracking, etc.).

Figure 4 - Generic Disk and Rotor terminology used in interim thrust reverser guidance material for minimizing the hazard from engine rotor burst

4.a - Ring Disk Drum Rotor Cross Section

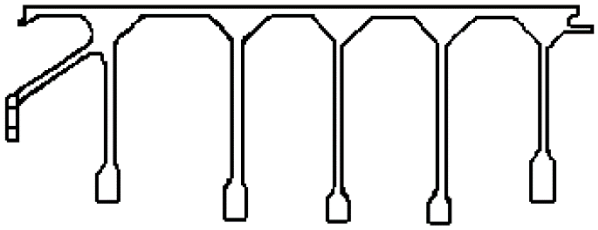

4.b - Deep Bore Disk Drum Rotor Cross Section

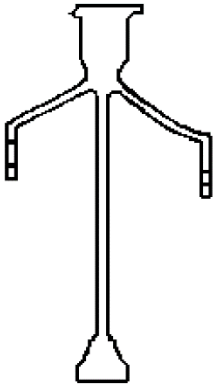

4.c - Single Stage Deep Bore Disk Cross Section

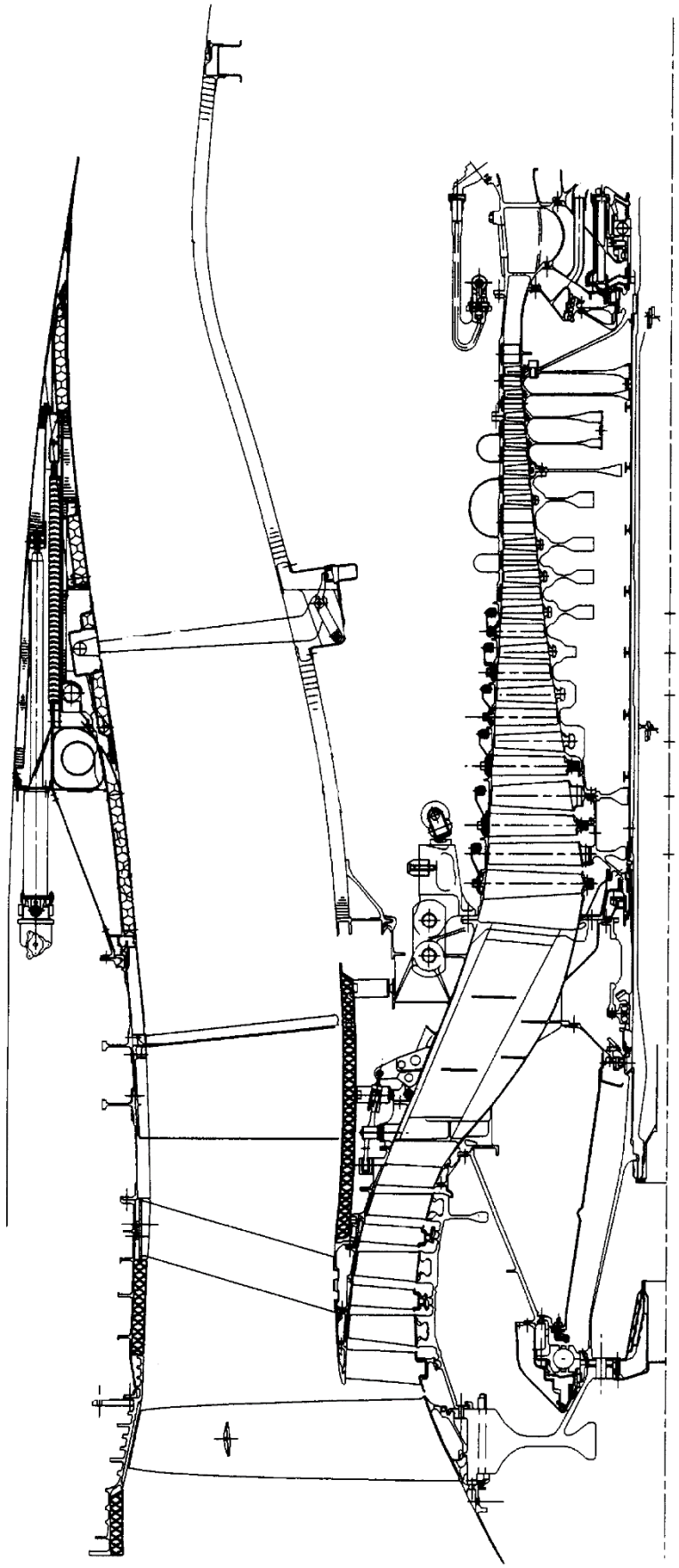

Figure 5: Typical High Bypass Turbofan Low and High Pressure Compressor with Fan Thrust Reverser Cross Section

[Amdt 25/1]

CS 25.934 Turbo-jet engine thrust reverser system tests

ED Decision 2003/2/RM

Thrust reversers installed on turbo-jet engines must meet the requirements of CS-E 890.

CS 25.937 Turbo-propeller-drag limiting systems

ED Decision 2003/2/RM

Turbo-propeller powered aeroplane propeller-drag limiting systems must be designed so that no single failure or malfunction of any of the systems during normal or emergency operation results in propeller drag in excess of that for which the aeroplane was designed under CS 25.367. Failure of structural elements of the drag limiting systems need not be considered if the probability of this kind of failure is extremely remote.

CS 25.939 Turbine engine operating characteristics

ED Decision 2003/2/RM

(a) Turbine engine operating characteristics must be investigated in flight to determine that no adverse characteristics (such as stall, surge, or flame-out) are present, to a hazardous degree, during normal and emergency operation within the range of operation limitations of the aeroplane and of the engine. (See AMC 25.939(a).)

(b) Reserved.

(c) The turbine engine air inlet system may not, as a result of air flow distortion during normal operation, cause vibration harmful to the engine. (See AMC 25.939(c).)

AMC 25.939(a) Turbine engine operating characteristics

ED Decision 2003/2/RM

The wording 'in flight' should be interpreted to cover all operating conditions from engine start until shut-down.

AMC 25.939(c) Turbine engine operating characteristics

ED Decision 2003/2/RM

1 The investigation should cover the complete range, for which certification is required, of aeroplane speeds, attitudes, altitudes and engine operating conditions including reverse thrust, and of steady and transient conditions on the ground and in flight, including crosswinds, rotation, yaw and stall. Non-critical conditions of operation which need not be considered should be agreed with the Agency.

2 If the airflow conditions at the engine air intake can be affected by the operating conditions of an adjacent engine, the investigation should include an exploration of the effects of running the adjacent engine at the same and at different conditions over the whole range of engine operating conditions, including reverse thrust. An investigation of the effect of malfunctioning of an adjacent engine should also be included.

3 Compliance with the requirement may include any suitable one or combination of the following methods; as agreed with the Agency.

a. Demonstration that the variations in engine inlet airflow distortion over the range defined in 1 are within the limits established for the particular engine type.

b. An investigation of blade vibration characteristics by the method and of the scope indicated in CS-E 650 and AMC E 650 (except that Maximum Take-off rpm need not be exceeded) carried out on –

i A representative installation on the ground using test equipment where the actual conditions of operation in the aeroplane are reproduced, or

ii A representative aeroplane on the ground and in flight as appropriate to the conditions being investigated.

c. The completion of sufficient flying with representative installations prior to certification such as to demonstrate that the vibration levels are satisfactory.

d. Any other method acceptable to the Agency.

AMC 25.939 Turbine engine operating characteristics

ED Decision 2003/2/RM

FAA Advisory Circular 25.939-1 Evaluating Turbine Engine Operating Characteristics, date 19/03/86, is accepted by the Agency as providing acceptable means of compliance with CS 25.939.

CS 25.941 Inlet, engine, and exhaust compatibility

ED Decision 2003/2/RM

For aeroplanes using variable inlet or exhaust system geometry, or both –

(a) The system comprised of the inlet, engine (including thrust augmentation systems, if incorporated), and exhaust must be shown to function properly under all operating conditions for which approval is sought, including all engine rotating speeds and power settings, and engine inlet and exhaust configurations;

(b) The dynamic effects of the operation of these (including consideration of probable malfunctions) upon the aerodynamic control of the aeroplane may not result in any condition that would require exceptional skill, alertness, or strength on the part of the pilot to avoid exceeding an operational or structural limitation of the aeroplane; and

(c) In showing compliance with sub-paragraph (b) of this paragraph, the pilot strength required may not exceed the limits set forth in CS 25.143(c) subject to the conditions set forth in sub-paragraphs (d) and (e) of CS 25.143.

CS 25.943 Negative acceleration

ED Decision 2003/2/RM

No hazardous malfunction of an engine or any component or system associated with the powerplant may occur when the aeroplane is operated at the negative accelerations within the flight envelopes prescribed in CS 25.333. This must be shown for the greatest duration expected for the acceleration. (See also CS 25.1315.)

CS 25.945 Thrust or power augmentation system

ED Decision 2003/2/RM

(a) *General*. Each fluid injection system must provide a flow of fluid at the rate and pressure established for proper engine functioning under each intended operating condition. If the fluid

can freeze, fluid freezing may not damage the aeroplane or adversely affect aeroplane performance.

(b) *Fluid tanks.* Each augmentation system fluid tank must meet the following requirements:

(1) Each tank must be able to withstand without failure the vibration, inertia, fluid, and structural loads that it may be subjected to in operation.

(2) The tanks as mounted in the aeroplane must be able to withstand without failure or leakage an internal pressure 1·5 times the maximum operating pressure.

(3) If a vent is provided, the venting must be effective under all normal flight conditions.

(4) Reserved.

(5) Each tank must have an expansion space of not less than 2% of the tank capacity. It must be impossible to fill the expansion space inadvertently with the aeroplane in the normal ground attitude.

(c) Augmentation system drains must be designed and located in accordance with CS 25.1455 if –

(1) The augmentation system fluid is subject to freezing; and

(2) The fluid may be drained in flight or during ground operation.

(d) The augmentation liquid tank capacity available for the use of each engine must be large enough to allow operation of the aeroplane under the approved procedures for the use of liquidaugmented power. The computation of liquid consumption must be based on the maximum approved rate appropriate for the desired engine output and must include the effect of temperature on engine performance as well as any other factors that might vary the amount of liquid required.

FUEL SYSTEM

CS 25.951 General

ED Decision 2003/2/RM

(a) Each fuel system must be constructed and arranged to ensure a flow of fuel at a rate and pressure established for proper engine functioning under each likely operating condition, including any manoeuvre for which certification is requested and during which the engine is permitted to be in operation.

(b) Each fuel system must be arranged so that any air which is introduced into the system will not result in –

(1) Reserved.

(2) Flameout.

(c) Each fuel system must be capable of sustained operation throughout its flow and pressure range with fuel initially saturated with water at 26,7°C (80°F) and having 0.20 cm^3 (0·75 cc) of free water per liter (US gallon) added and cooled to the most critical condition for icing likely to be encountered in operation.

AMC 25.951(d) Fuel System – General

ED Decision 2003/2/RM

Acceptable means of compliance with CS 25.951(d) include one of the following:

(1) Incorporation of a Agency-approved system that re-circulates the fuel back into the fuel system.

(2) Capping or securing the pressurisation and drain valve.

(3) Manually draining the fuel from a holding tank into a container.

CS 25.952 Fuel system analysis and test

ED Decision 2003/2/RM

(a) Proper fuel system functioning under all probable operating conditions must be shown by analysis and those tests found necessary by the Agency. Tests, if required, must be made using the aeroplane fuel system or a test article that reproduces the operating characteristics of the portion of the fuel system to be tested.

(b) The likely failure of any heat exchanger using fuel as one of its fluids may not result in a hazardous condition.

CS 25.953 Fuel system independence

ED Decision 2003/2/RM

Each fuel system must meet the requirements of CS 25.903(b) by –

(a) Allowing the supply of fuel to each engine through a system independent of each part of the system supplying fuel to any other engine; or

(b) Any other acceptable method.

CS 25.954 Fuel system lightning protection

ED Decision 2003/2/RM

The fuel system must be designed and arranged to prevent the ignition of fuel vapour within the system (see AMC 25.581, AMC 25.899 and AMC 25.954) by –

(a) Direct lightning strikes to areas having a high probability of stroke attachment;

(b) Swept lightning strokes to areas where swept strokes are highly probable; and

(c) Corona and streamering at fuel vent outlets.

AMC 25.954 Fuel system lightning protection

ED Decision 2003/2/RM

1 The fuel storage system and the outlets of the venting and jettisoning systems of the aeroplane, should be so situated and/or protected, that the probability of a catastrophe being caused by them being struck by lightning is extremely improbable.

NOTE: The location of the fuel tanks and vents within the airframe may be such as to satisfy this.

2 In addition, the outlets of venting and jettisoning systems should be so located and designed that –

a. They will not, under any atmospheric conditions which the aeroplane may encounter, experience electrical discharges of such magnitudes as will ignite any fuel/air mixture of the ratios likely to be present, and

b. The fuel and its vapours in flammable concentrations will not pass close to parts of the aeroplane which will produce electrical discharges capable of igniting fuel/air mixtures.

NOTE: Electrical discharges may, in addition to direct lightning strikes, be caused by corona and streamer formation in the vicinity of thunderstorms.

3 The fuel system of the aeroplane should be so designed that the passage of lightning discharges through the main aeroplane structure will not produce, by the process of conduction or induction, such potential differences as will cause electrical sparking through areas where there may be flammable vapours.

NOTE: For aeroplanes of conventional shape, an acceptable method of complying with CS 25.954 is given in FAA Advisory Circular AC20-53A – 'Protection of Aircraft Fuel Systems against Fuel Vapour Ignition due to Lightning'. For aeroplanes of non-conventional shape, re-definition of the zones may be necessary.

CS 25.955 Fuel flow

ED Decision 2003/2/RM

(a) Each fuel system must provide at least 100% of the fuel flow required under each intended operating condition and manoeuvre. Compliance must be shown as follows:

(1) Fuel must be delivered to each engine at a pressure within the limits specified in the engine type certificate.

(2) The quantity of fuel in the tank may not exceed the amount established as the unusable fuel supply for that tank under the requirements of CS 25.959 plus that necessary to show compliance with this paragraph.

(3) Each main pump must be used that is necessary for each operating condition and attitude for which compliance with this paragraph is shown, and the appropriate emergency pump must be substituted for each main pump so used.

(4) If there is a fuel flowmeter, it must be blocked and the fuel must flow through the meter or its bypass. (See AMC 25.955(a)(4).)

(b) If an engine can be supplied with fuel from more than one tank, the fuel system must –

(1) Reserved.

(2) For each engine, in addition to having appropriate manual switching capability, be designed to prevent interruption of fuel flow to that engine, without attention by the flight crew, when any tank supplying fuel to that engine is depleted of usable fuel during normal operation, and any other tank, that normally supplies fuel to that engine alone, contains usable fuel.

AMC 25.955(a)(4) Fuel flow

ED Decision 2003/2/RM

The word 'blocked' should be interpreted to mean 'with the moving parts fixed in the position for maximum pressure drop'.

CS 25.957 Flow between interconnected tanks

ED Decision 2003/2/RM

If fuel can be pumped from one tank to another in flight, the fuel tank vents and the fuel transfer system must be designed so that no structural damage to the tanks can occur because of overfilling.

CS 25.959 Unusable fuel supply

ED Decision 2003/2/RM

The unusable fuel quantity for each fuel tank and its fuel system components must be established at not less than the quantity at which the first evidence of engine malfunction occurs under the most adverse fuel feed condition for all intended operations and flight manoeuvres involving fuel feeding from that tank. Fuel system component failures need not be considered.

CS 25.961 Fuel system hot weather operation

ED Decision 2003/2/RM

(a) The fuel system must perform satisfactorily in hot weather operation. This must be shown by showing that the fuel system from the tank outlets to each engine is pressurised, under all intended operations, so as to prevent vapour formation, or must be shown by climbing from the altitude of the airport elected by the applicant to the maximum altitude established as an operating limitation under CS 25.1527. If a climb test is elected, there may be no evidence of vapour lock or other malfunctioning during the climb test conducted under the following conditions:

(1) Reserved.

(2) For turbine engine powered aeroplanes, the engines must operate at take-off power for the time interval selected for showing the take-off flight path, and at maximum continuous power for the rest of the climb.

(3) The weight of the aeroplane must be the weight with full fuel tanks, minimum crew, and the ballast necessary to maintain the centre of gravity within allowable limits.

(4) The climb airspeed may not exceed –

(i) Reserved.

(ii) The maximum airspeed established for climbing from take-off to the maximum operating altitude.

(5) The fuel temperature must be at least 43.3°C (110°F).

(b) The test prescribed in sub-paragraph (a) of this paragraph may be performed in flight or on the ground under closely simulated flight conditions. If a flight test is performed in weather cold enough to interfere with the proper conduct of the test, the fuel tank surfaces, fuel lines, and other fuel system parts subject to cold air must be insulated to simulate, insofar as practicable, flight in hot weather.

CS 25.963 Fuel tanks: general

ED Decision 2003/2/RM

(a) Each fuel tank must be able to withstand, without failure, the vibration, inertia, fluid and structural loads that it may be subjected to in operation. (See AMC 25.963(a).)

(b) Flexible fuel tank liners must be approved or must be shown to be suitable for the particular application.

(c) Integral fuel tanks must have facilities for interior inspection and repair.

(d) Fuel tanks must, so far as it is practicable, be designed, located and installed so that no fuel is released in or near the fuselage or near the engines in quantities sufficient to start a serious fire in otherwise survivable crash conditions. (See also AMC 25.963(d).)

(e) Fuel tanks within the fuselage contour must be able to resist rupture, and to retain fuel, under the inertia forces prescribed for the emergency landing conditions in CS 25.561. In addition, these tanks must be in a protected position so that exposure of the tanks to scraping action with the ground is unlikely.

(f) For pressurised fuel tanks, a means with failsafe features must be provided to prevent the build-up of an excessive pressure difference between the inside and the outside of the tank.

(g) Fuel tank access covers must comply with the following criteria in order to avoid loss of hazardous quantities of fuel:

(1) All covers located in an area where experience or analysis indicates a strike is likely, must be shown by analysis or tests to minimise penetration and deformation by tyre fragments, low energy engine debris, or other likely debris.

(2) Reserved

(See AMC 25.963(g).)

AMC 25.963(a) Fuel tanks: General

ED Decision 2003/2/RM

Precautions should be taken against the possibility of corrosion resulting from microbiological contamination of fuel.

AMC 25.963(d) Fuel tanks: General

ED Decision 2003/2/RM

Fuel tank installations should be such that the tanks will not be ruptured by the aeroplane sliding with its landing gear retracted, nor by a landing gear, nor an engine mounting tearing away.

Fuel tanks inboard of the landing gear or inboard of or adjacent to the most outboard engine, should have the strength to withstand fuel inertia loads appropriate to the accelerations specified in CS 25.561(b)(3) considering the maximum likely volume of fuel in the tank(s). For the purposes of this substantiation it will not be necessary to consider a fuel volume beyond 85% of the maximum permissible volume in each tank. For calculation of inertia pressures a typical density of the appropriate fuel may be used.

AMC 25.963(g) Fuel tanks: General

ED Decision 2003/2/RM

1 *Purpose*. This AMC sets forth an acceptable means of showing compliance with the provisions of CS-25 dealing with the certification requirements for fuel tank access covers. Guidance information is provided for showing compliance with the impact resistance requirements of 25.963(g).

2 *Background*. Fuel tank access covers have failed in service due to impact with high speed objects such as failed tyre tread material and engine debris following engine failures. Failure of an access cover on a wing fuel tank may result in the loss of hazardous quantities of fuel which could subsequently ignite.

3 *Impact Resistance*

a. All fuel tank access covers must be designed to minimise penetration and deformation by tyre fragments, low energy engine debris, or other likely debris, unless the covers are located in an area where service experience or analysis indicates a strike is not likely. The rule does not specify rigid standards for impact resistance because of the wide range of likely debris which could impact the covers. However, 'minimise penetration and deformation' should be achieved by testing covers using debris of a type, size, trajectory, and velocity that represents conditions anticipated in actual service for the aeroplane model involved. There should be no hazardous quantity of fuel leakage after impact. The access covers, however, need not be more impact resistant than the contiguous tank structure.

b. In the absence of a more rational method, the following criteria should be used for evaluating access covers for impact resistance.

i. Covers located within 15° inboard and outboard of the tyre plane of rotation, measured from the centre plane of tyre rotation with olco strut in the nominal position, should be evaluated. The evaluation should be based on the results of impact tests using tyre tread segments having width and length equal to the full width of the tread, with thickness of the full tread plus casing. The velocities used in the assessment should be based on the highest speed that the aircraft is likely to use on the ground. Generally, this will be the higher of the aircraft rotation speed (V_R) and the flapless landing speed.

ii. Covers located within 15° forward of the front compressor or fan plane measured from the centre of rotation to 15° aft of the rearmost turbine plane measured from the centre of rotation, should be evaluated for impact from small fragments

(shrapnel). The covers need not be designed to withstand impact from high energy engine fragments such as rotor segments.

CS 25.965 Fuel tank tests

ED Decision 2003/2/RM

(a) It must be shown by tests that the fuel tanks, as mounted in the aeroplane can withstand, without failure or leakage, the more critical of the pressures resulting from the conditions specified in sub-paragraphs (a)(1) and (2) of this paragraph. In addition it must be shown by either analysis or tests, (see AMC 25.965(a)) that tank surfaces subjected to more critical pressures resulting from the conditions of sub-paragraphs (a)(3) and (4) of this paragraph, are able to withstand the following pressures:

(1) An internal pressure of 24 kPa (3·5 psi).

(2) 125% of the maximum air pressure developed in the tank from ram effect.

(3) Fluid pressures developed during maximum limit accelerations, and deflections, of the aeroplane with a full tank.

(4) Fluid pressures developed during the most adverse combination of aeroplane roll and fuel load.

(b) Each metallic tank with large unsupported or unstiffened flat surfaces, whose failure or deformation could cause fuel leakage, must be able to withstand the following test, or its equivalent, without leakage or excessive deformation of the tank walls:

(1) Each complete tank assembly and its supports must be vibration tested while mounted to simulate the actual installation.

(2) Except as specified in sub-paragraph (b)(4) of this paragraph, the tank assembly must be vibrated for 25 hours at an amplitude of not less than 0.8 mm (1/32 of an inch) (unless another amplitude is substantiated) while two-thirds filled with water or other suitable test fluid.

(3) The test frequency of vibration must be as follows:

(i) If no frequency of vibration resulting from any rpm within the normal operating range of engine speeds is critical, the test frequency of vibration must be 2 000 cycles per minute.

(ii) If only one frequency of vibration resulting from any rpm within the normal operating range of engine speeds is critical, that frequency of vibration must be the test frequency.

(iii) If more than one frequency of vibration resulting from any rpm within the normal operating range of engine speeds is critical, the most critical of these frequencies must be the test frequency.

(4) Under sub-paragraph (b)(3)(ii) and (iii) of this paragraph, the time of test must be adjusted to accomplish the same number of vibration cycles that would be accomplished in 25 hours at the frequency specified in sub-paragraph (b)(3)(i) of this paragraph.

(5) During the test, the tank assembly must be rocked at the rate of 16 to 20 complete cycles per minute, through an angle of 15° on both sides of the horizontal (30° total), about the most critical axis, for 25 hours. If motion about more than one axis is likely to be critical, the tank must be rocked about each critical axis for 12·5 hours.

(c) Except where satisfactory operating experience with a similar tank in a similar installation is shown, non-metallic tanks must withstand the test specified in sub-paragraph (b)(5) of this paragraph, with fuel at a temperature of 43.3°C (110°F). During this test, a representative specimen of the tank must be installed in a supporting structure simulating the installation in the aeroplane.

(d) For pressurised fuel tanks, it must be shown by analysis or tests that the fuel tanks can withstand the maximum pressure likely to occur on the ground or in flight.

AMC 25.965(a) Fuel tank tests

ED Decision 2003/2/RM

The analysis or tests should be performed on each complete tank in the configuration ready and capable of flight. Each complete tank means any tank fully equipped which is isolated from other tanks by tank walls or which may be isolated by valves under some flight configurations.

CS 25.967 Fuel tank installations

ED Decision 2003/2/RM

(a) Each fuel tank must be supported so that tank loads (resulting from the weight of the fuel in the tanks) are not concentrated on unsupported tank surfaces. In addition –

(1) There must be pads, if necessary, to prevent chafing between the tank and its supports;

(2) Padding must be non-absorbent or treated to prevent the absorption of fluids;

(3) If a flexible tank liner is used, it must be supported so that it is not required to withstand fluid loads (see AMC 25.967(a)(3)); and

(4) Each interior surface of the tank compartment must be smooth and free of projections that could cause wear of the liner unless –

(i) Provisions are made for protection of the liner at these points; or

(ii) That construction of the liner itself provides that protection.

(b) Spaces adjacent to tank surfaces must be ventilated to avoid fume accumulation due to minor leakage. If the tank is in a sealed compartment, ventilation may be limited to drain holes large enough to prevent excessive pressure resulting from altitude changes.

(c) The location of each tank must meet the requirements of CS 25.1185(a).

(d) No engine nacelle skin immediately behind a major air outlet from the engine compartment may act as the wall of an integral tank.

(e) Each fuel tank must be isolated from personnel compartments by a fumeproof and fuelproof enclosure.

AMC 25.967(a)(3) Fuel tank installation

ED Decision 2003/2/RM

The installation of a flexible tank and its venting, according to CS 25.975(a)(3) should be such that the tank liner will not be deformed in such a way as to significantly affect the fuel quantity indication.

CS 25.969 Fuel tank expansion space

ED Decision 2003/2/RM

Each fuel tank must have an expansion space of not less than 2% of the tank capacity. It must be impossible to fill the expansion space inadvertently with the aeroplane in the normal ground attitude. For pressure fuelling systems, compliance with this paragraph may be shown with the means provided to comply with CS 25.979(b).

CS 25.971 Fuel tank sump

ED Decision 2003/2/RM

(a) Each fuel tank must have a sump with an effective capacity, in the normal ground attitude, of not less than the greater of 0·10% of the tank capacity or one-quarter of a litre unless operating limitations are established to ensure that the accumulation of water in service will not exceed the sump capacity.

(b) Each fuel tank must allow drainage of any hazardous quantity of water from any part of the tank to its sump with the aeroplane in the ground attitude.

(c) Each fuel tank sump must have an accessible drain that –

(1) Allows complete drainage of the sump on the ground;

(2) Discharges clear of each part of the aeroplane; and

(3) Has manual or automatic means for positive locking in the closed position.

CS 25.973 Fuel tank filler connection

ED Decision 2003/2/RM

Each fuel tank filler connection must prevent the entrance of fuel into any part of the aeroplane other than the tank itself. In addition –

(a) Reserved

(b) Each recessed filler connection that can retain any appreciable quantity of fuel must have a drain that discharges clear of each part of the aeroplane;

(c) Each filler cap must provide a fuel-tight seal; and

(d) Each fuel filling point must have a provision for electrically bonding the aeroplane to ground fuelling equipment.

CS 25.975 Fuel tank vents

ED Decision 2003/2/RM

(a) *Fuel tank vents*. Each fuel tank must be vented from the top part of the expansion space so that venting is effective under any normal flight condition. In addition –

(1) Each vent must be arranged to avoid stoppage by dirt or ice formation;

(2) The vent arrangement must prevent siphoning of fuel during normal operation;

(3) The venting capacity and vent pressure levels must maintain acceptable differences of pressure between the interior and exterior of the tank, during –

(i) Normal flight operation;

(ii) Maximum rate of ascent and descent; and

(iii) Refuelling and defuelling (where applicable);

(4) Airspaces of tanks with interconnected outlets must be interconnected;

(5) There may be no point in any vent line where moisture can accumulate with the aeroplane in the ground attitude or the level flight attitude, unless drainage is provided; and

(6) No vent or drainage provision may end at any point –

(i) Where the discharge of fuel from the vent outlet would constitute a fire hazard; or

(ii) From which fumes could enter personnel compartments.

CS 25.977 Fuel tank outlet

ED Decision 2003/2/RM

(a) There must be a fuel strainer for the fuel tank outlet or for the booster pump. This strainer must –

(1) Reserved.

(2) Prevent the passage of any object that could restrict fuel flow or damage any fuel system component.

(b) *Reserved*.

(c) The clear area of each fuel tank outlet strainer must be at least five times the area of the outlet line.

(d) The diameter of each strainer must be at least that of the fuel tank outlet.

(e) Each finger strainer must be accessible for inspection and cleaning.

CS 25.979 Pressure fuelling system

ED Decision 2003/2/RM

For pressure fuelling systems, the following apply:

(a) Each pressure fuelling system fuel manifold connection must have means to prevent the escape of hazardous quantities of fuel from the system if the fuel entry valve fails.

(b) An automatic shut-off means must be provided to prevent the quantity of fuel in each tank from exceeding the maximum quantity approved for that tank. This means must –

(1) Allow checking for proper shut-off operation before each fuelling of the tank; and

(2) Provide indication, at each fuelling station, of failure of the shut-off means to stop the fuel flow at the maximum quantity approved for that tank.

(c) A means must be provided to prevent damage to the fuel system in the event of failure of the automatic shut-off means prescribed in sub-paragraph (b) of this paragraph.

(d) The aeroplane pressure fuelling system (not including fuel tanks and fuel tank vents) must withstand an ultimate load that is 2·0 times the load arising from the maximum pressures, including surge, that is likely to occur during fuelling. The maximum surge pressure must be established with any combination of tank valves being either intentionally or inadvertently closed. (See AMC 25.979(d).)

(e) The aeroplane defuelling system (not including fuel tanks and fuel tank vents) must withstand an ultimate load that is 2·0 times the load arising from the maximum permissible defuelling pressure (positive or negative) at the aeroplane fuelling connection.

AMC 25.979(d) Pressure fuelling systems

ED Decision 2003/2/RM

1 Pressure fuelling systems, fuel tanks and the means preventing excessive fuel pressures, should be designed to withstand normal maximum fuelling pressure of not less than 345 kN/m^2 (50 psi) at the coupling to the aeroplane.

2 Pressure fuelling systems should be so arranged that the fuel entry point is at or near the bottom of the tank so as to reduce the level of electrostatic charge in the tank during fuelling.

CS 25.981 Fuel tank ignition prevention

ED Decision 2005/006/R

(a) No ignition source may be present at each point in the fuel tank or fuel tank system where catastrophic failure could occur due to ignition of fuel or vapours. This must be shown by:

(1) Determining the highest temperature allowing a safe margin below the lowest expected auto-ignition temperature of the fuel in the fuel tanks.

(2) Demonstrating that no temperature at each place inside each fuel tank where fuel ignition is possible will exceed the temperature determined under sub-paragraph (a)(1) of this paragraph. This must be verified under all probable operating, failure, and malfunction conditions of each component whose operation, failure, or malfunction could increase the temperature inside the tank.

(3) Demonstrating that an ignition source does not result from each single failure and from all combinations of failures not shown to be Extremely Improbable as per 25.1309. (See AMC 25.981(a))

(b) *Reserved*.

(c) Design precautions must be taken to achieve conditions within the fuel tanks which reduce the likelihood of flammable vapours. (See AMC 25.981(c)).

[Amdt 25/1]

AMC 25.981 Fuel tank temperature

ED Decision 2003/2/RM

FAA Advisory Circular 25.981-1A, Guidelines For Substantiating Compliance With The Fuel Tank Temperature Requirements, dated 20/01/71, is accepted by the Agency as providing acceptable means of compliance with CS 25.981.

AMC 25.981(a) Ignition precautions

ED Decision 2005/006/R

1. Introduction

Service history has shown that ignition sources have developed in aircraft fuel tanks due to unforeseen failure modes or factors that may not have been considered at the time of original certification of the aircraft.

2. Background

There are three primary phenomena that can result in ignition of fuel vapours in aeroplane fuel tanks. The first is electrical arcs. The second is friction sparks resulting from mechanical contact of rotating equipment in the fuel tank. The third is hot surface ignition or auto ignition.

The conditions required to ignite fuel vapours from these ignition sources vary with pressures and temperatures within the fuel tank and can be affected by sloshing or spraying of fuel in the tank. Due to the difficulty in predicting fuel tank flammability and eliminating flammable vapours from the fuel tank, design practices have assumed that a flammable fuel air mixture exists in aircraft fuel tanks and require that no ignition sources be present.

Any components located in or adjacent to a fuel tank must be qualified to meet standards that assure, during both normal and failure conditions, ignition of flammable fluid vapours will not occur. This is typically done by a combination of design standards, component testing and analysis. Testing of components to meet explosion proof requirements is carried out for various single and combinations of failures to show that arcing, sparking, auto ignition or flame propagation from the component will not occur. Testing for components has been accomplished using standards and component qualification tests. The standards include for example Eurocae ED-14 / RTCA DO160 and BS 3G 100 that defines explosion proof requirements for electrical equipment and analysis of potential electrical arc and friction sparks.

FUEL SYSTEM IGNITION PREVENTION

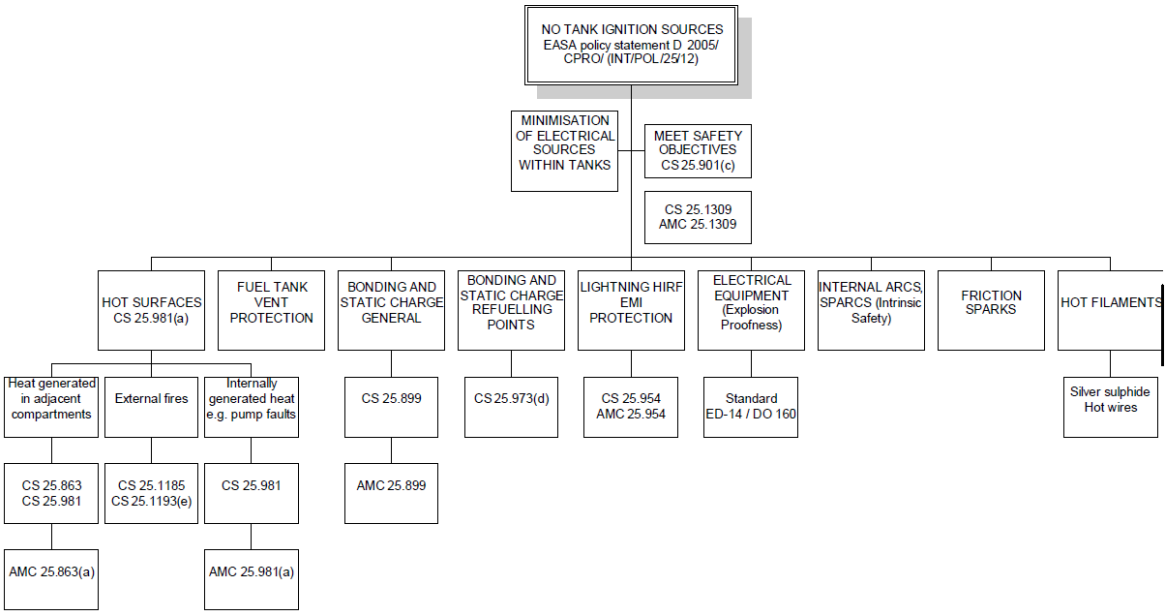

Therefore the focus of this evaluation of the aircraft fuel system should be to identify and address potential sources of ignition within fuel tanks, which may not previously have been considered to be unsafe features.

3. Ignition Sources

3.1 Electrical Arcs and Sparks

Ignition sources from electrical arcs can occur as a result of electrical component and wiring failures, direct and indirect effects of lightning, HIRF / EMI, and static discharges.

The level of electrical energy necessary to ignite fuel vapours is defined in various standards. The generally accepted value is 0.2 millijoules. An adequate margin needs to

be considered, when evaluating the maximum allowable energy level for the fuel tank design.

3.2 Friction Sparks

Rubbing of metallic surfaces can create friction spark ignition sources. Typically this may result from debris contacting a fuel pump impeller or an impeller contacting the pump casing.

3.3 Hot Surface Ignition

Guidance provided in AC 25-8 has defined hot surfaces which come within 30 degrees Centigrade of the autogenous ignition temperature of the fuel air mixture for the fluid as ignition sources. It has been accepted that this margin of 30 degrees Centigrade supported compliance to CS 25.981(a). Surface temperatures not exceeding 200 °C have been accepted without further substantiation against current fuel types.

4. Lessons learned

4.1 Introduction

As detailed above, the fuel system criticality may not have been addressed in the past against current understanding as far as the ignition risk is concerned. Inspections and design review have been performed, resulting in findings detailed below. One of the main lessons learned is to minimize electrical sources within fuel tanks (see § 4.3).

4.2 Components in-service experience

The following sections intend to present a list of faults, which have occurred to fuel system components. By its nature it cannot be an exhaustive list, but is only attempting to provide a list of undesirable features of fuel system components that should be avoided when designing fuel tanks.

– Pumps:

a) Pump inducer failures have occurred resulting in ingestion of the inducer into the pump impeller and release of debris into the fuel tank.

b) Pump inlet check valves have failed resulting in rubbing on pump impeller.

c) Stator windings have failed during operation of the fuel pump. Subsequent failure of a second phase of the pump caused arcing through the fuel pump housing.

d) Thermal protective features incorporated into the windings of pumps have been deactivated by inappropriate wrapping of the windings.

e) Cooling port tubes have been omitted during pump overhaul.

f) Extended dry running of fuel pumps in empty fuel tanks, violation of manufacturers recommended procedures, suspected of being causal factors in two incidents.

g) Use of steel impellers which might produce sparks if debris enters the pump.

h) Debris has been found lodged inside pumps.

I) Pump power supply connectors have corroded allowing fuel leakage and electrical arcing.

j) Electrical connections within the pump housing have been exposed and designed with inadequate clearance from the pump cover resulting in arcing.

k) Resettable thermal switches resetting at higher trip temperature.

l) Flame arrestors falling out of their respective mounting.

m) Internal wires coming in contact with the pump rotating group, energising the rotor and arcing at the impeller / adapter interface.

n) Poor bonding across component interfaces.

o) Insufficient ground fault current capability.

p) Poor bonding of components to structure.

q) Loads from the aeroplane fuel feed plumbing were transferred.

r) Premature failure of fuel pump thrust bearings allowing steel rotating parts to contact the steel pump side plate.

– Wiring to Pumps located in metallic conduits or adjacent to fuel tank walls.

  Wear of Teflon sleeves and wiring insulation allowing arcing to conduit causing an ignition source in tank, or arcing to the tank wall.

– Fuel Pump Connectors

  Electrical arcing at connections within electrical connectors has occurred due to bent pins or corrosion.

– FQIS Wiring

  Degradation of wire insulation (cracking) and corrosion (copper sulphate deposits) at electrical connectors, unshielded FQIS wires have been routed in wire bundles with high voltage wires.

– FQIS Probes

  Corrosion and copper sulphide deposits have caused reduced breakdown voltage in FQIS wiring, FQIS wiring clamping features at electrical connections on fuel probes has caused damage to wiring and reduced breakdown voltage. Contamination in the fuel tanks including: steel wool, lock wire, nuts, rivets, bolts; and mechanical impact damage, caused reduced arc path between FQIS probe walls.

– Bonding Straps

  Corrosion, inappropriately attached connections (loose or improperly grounded attachment points). Static bonds on fuel system plumbing connections inside the fuel tank have been found corroded or mechanically worn.

– Failed or aged seals

  Seal deterioration may result in leak internal or external to fuel system, as well as fuel spraying.

4.3 Minimising electrical components hazards within fuel tanks

One of the lessons learned listed above is the undesirable presence of electrical components within fuel tanks. Power wiring has been routed in conduits when crossing fuel tanks, however, chaffing has occurred within conduits. It is therefore suggested that

such wiring should be routed outside of fuel tanks to the maximum extent possible. At the equipment level, connectors and adjacent areas should be taken into account during the explosion proofness qualification of the equipment (typically, pumps).

However, for some wiring, such as FQIS or sensor wiring, it might be unavoidable to route them inside of tanks, and therefore they should be qualified as intrinsically safe. The Safety Assessment section below indicates how any residual fuel tank wiring may be shown to meet the required Safety Objectives.

5. Safety assessment

5.1 Introduction

The fuel system must comply with CS 25.901(c), which requires compliance to CS 25.1309. According to CS 25.981(a)(3), a Safety Assessment of the fuel system should be performed showing that the presence of an ignition source within the fuel system is Extremely Improbable and does not result from a single failure, as per CS 25.1309 and the corresponding AMC 25.1309 principles.

The Acceptable Means of Compliance (AMC) 25.1309, "System Design and Analysis" describes methods for completing system safety assessments (SSA). The depth and scope of an acceptable SSA depends upon the complexity and criticality of the functions performed by the system under consideration, the severity of related failure conditions, the uniqueness of the design and extent of relevant service experience, the number and complexity of the identified causal failure scenarios, and the ability to detect contributing failures. The SSA criteria, process, analysis methods, validation and documentation should be consistent with the guidance material contained in AMC 25.1309.

Failure rates of fuel system component should be carefully established as required using in-service experience to the maximum extent.

5.2 Assumptions and Boundary Conditions for the Analysis:

The analysis should be conducted based upon assumptions described in this section.

5.2.a Fuel Tank Flammability

The system safety analysis should be prepared considering all aircraft flight and ground conditions, assuming that an explosive fuel air mixture is present in the fuel tanks at all times.

5.2.b Failure Condition Classification

Unless design features are incorporated that mitigate the hazards resulting from a fuel tank ignition event, (e.g. polyurethane foam), the SSA should assume that the presence of an ignition source is a catastrophic failure condition.

5.2.c Failure conditions

The analysis should be conducted assuming deficiencies and anomalies, failure modes identified by the review of service information on other products as far as practical, and any other failure modes identified by the fuel tank system functional hazard assessment. The effects of manufacturing variability, ageing, wear, corrosion, and likely damage should be considered.

In service and production functional tests, component acceptance tests and maintenance checks may be used to substantiate the degree to which these states must be considered. In some cases, for example component bonding or ground

paths, a degraded state will not be detectable without periodic functional test of the feature. For these features, inspection/test intervals should be established based on previous service experience on equipment installed in the same environment. If previous experience on similar or identical components is not available, shorter initial inspection/test intervals should be established until design maturity can be assured.

– Fuel Pumps.

Service experience shows that there have been a significant number of failure modes, which have the capability of creating an ignition source within the tank. Many of these are as the result of single failures, or single failures in combination with latent failures. It should be shown that fuel pumps do not run dry beyond their qualified level. If fuel pumps can be uncovered during normal operation, it is recommended that pumps are shut down automatically and that the shutdown feature is sufficiently robust such that erroneous pump running does not cause a hazard. It is also recommended to consider the inlet design such that the ingestion of FOD is minimized. It is acceptable to uncover pumps when operating under negative "g" conditions.

– Fuel Pump Wiring.

Despite precautions to prevent fuel pump wire chafing, arc faults have occurred. For pump wire installations within the tank or adjacent to the tank wall to remain acceptable, additional means must be provided to isolate the electrical supply, in the event of arc faults. The means must be effective in preventing continued arcing to the conduit or the tank wall.

– FQIS Wiring.

Although in recent times, constructors have made attempts to segregate FQIS wiring from other aircraft wiring, it is recognised that it is not possible to be confident, at the design stage, that the segregation will remain effective over the whole fleet life. Subsequent aircraft modifications in service may negate the design intentions. To counter this threat to FQIS wiring, additional design precautions should be considered to prevent any unwanted stray currents, from entering the tank. The precautions taken must remain effective, even following anticipated future modifications.

– Bonding Schemes.

Service experience has shown that the required Safety Objectives can be met with a redundant bonding scheme incorporating dual electrical paths, with appropriate level of inspection. No definitive advice can be given about the inspection period, but it is expected that the design and qualification of the bonding leads and attachments (or alternative bonding means) will be sufficiently robust, so that frequent inspections will not be needed.

5.2.d External Environment

The severity of the external environmental conditions that should be considered are those established by certification regulations and special conditions (e.g., HIRF, lightning), regardless of the associated probability. For example, the probability of lightning encounter should be assumed to be one.

5.3 Qualitative Safety Assessment

The level of analysis required to show ignition sources will not develop will depend upon the specific design features of the fuel tank system being evaluated. Detailed quantitative analysis should not be necessary if a qualitative safety assessment shows that features incorporated into the fuel tank system design protect against the development of ignition sources within the fuel tank system. For example, if all wiring entering the fuel tanks was shown to have protective features such as separation, shielding or surge suppressors, the compliance demonstration would be limited to demonstrating the effectiveness of the features and defining any long term maintenance requirements so that the protective features are not degraded.

5.4 Component Qualification Review

Qualification of components such as fuel pumps, using the standard specifications has not always accounted for unforeseen failures, wear, or inappropriate overhaul or maintenance. Service experience indicates that the explosion proofness demonstration needs to remain effective under all of the continued operating conditions likely to be encountered in service. Therefore an extensive evaluation of the qualification of components may be required if qualitative assessment does not limit the component as a potential ignition source.

5.5 Electrical sparks

A failure analysis should be performed of all fuel systems and sub systems with wiring routed into fuel tanks. Systems that should be considered include, temperature indication, Fuel Quantity Indication System, Fuel Level sensors, fuel pump power and control and indication, and any other wiring routed into or adjacent to fuel tanks. The analysis must consider system level failures and also component level failures mentioned in Section 4.2 and discussed below. Component failures, which have been experienced in service, are to be considered as probable, single failures. The analysis should include existence of latent failures, such as contamination, damage/pinching of wires during installation or corrosion on the probes, connectors, or wiring and subsequent failures that may lead to an ignition source within the fuel tank. The wire routing, shielding and segregation outside the fuel tanks should also be considered. The evaluation must consider both electrical arcing and localised heating that may result on equipment, fuel quantity indicating system probes, and wiring.

5.5.a Electrical Short Circuits

5.5.a.1 Effects of electrical short circuits, including hot shorts, on equipment and wiring which enter the fuel tanks should be considered, particularly for the fuel quantity indicating system wiring, fuel level sensors and probes.

5.5.a.2 The evaluation of electrical short circuits must consider shorts within electrical equipment.

5.5.b Electromagnetic Effects, including Lightning, EMI, and HIRF

5.5.b.1 Effects of electrical transients from lightning, EMI or HIRF on equipment and wiring within the fuel tanks should be considered, particularly for the fuel quantity indicating system wiring and probes.

5.5.b.2 Latent failures such as shield and termination corrosion, shield damage, and transient limiting device failure should be considered and appropriate indication or inspection intervals established.

5.5.b.3 The evaluation of electromagnetic effects from lightning, EMI, or HIRF must be based on the specific electromagnetic environment of a particular aircraft model. Standardized tests such as those in EUROCAE ED-14/RTCA DO-160 Sections 19, 20 and 22 are not sufficient alone, without evaluation of the characteristics of the specific electromagnetic environment for a particular aircraft model to show that appropriate standardised ED-14/DO-160 test procedures and test levels are selected. Simulation of various latent failures of fuel system components within the tanks may be required to demonstrate the transient protection effectiveness.

5.6 Friction Sparks:

The analysis should include evaluation of the effects of debris entering the fuel pumps, including any debris that could be generated internally such as any components upstream of the pump inlet. Service experience has shown that pump inlet check valves, inducers, nuts, bolts, rivets, fasteners, sealant, lock wire etc. have been induced into fuel pumps and contacted the impeller. This condition could result in creation of friction sparks and should be considered as part of the system assessment when conducting the system safety assessment.

6. Instructions for continued airworthiness for the fuel tank system

The analysis conducted to show compliance with CS 25.981(a) may result in the need to define certain required inspection or maintenance items. Any item that is required to assure that an ignition source does not develop within the fuel tank or maintain protective features incorporated to prevent a catastrophic fuel tank ignition event must be incorporated in the limitations section of the instructions for continued airworthiness or in the maintenance program.

[Amdt 25/1]

AMC 25.981(c) Flammability precautions

ED Decision 2005/006/R

The intention of this requirement is to introduce design precautions, to avoid unnecessary increases in fuel tank flammability. These precautions should ensure:

(i) no large net heat sources going into the tank,

(ii) no unnecessary spraying, sloshing or creation of fuel mist.

[Amdt 25/1]

FUEL SYSTEM COMPONENTS

CS 25.991 Fuel pumps

ED Decision 2003/2/RM

(a) *Main pumps*. Each fuel pump required for proper engine operation, or required to meet the fuel system requirements of this Subpart (other than those in sub-paragraph (b) of this paragraph), is a main pump. For each main pump, provision must be made to allow the bypass of each positive displacement fuel pump approved as part of the engine.

(b) *Emergency pumps*. There must be emergency pumps or another main pump to feed each engine immediately after failure of any main pump.

CS 25.993 Fuel system lines and fittings

ED Decision 2003/2/RM

(a) Each fuel line must be installed and supported to prevent excessive vibration and to withstand loads due to fuel pressure and accelerated flight conditions.

(b) Each fuel line connected to components of the aeroplane between which relative motion could exist must have provisions for flexibility.

(c) Each flexible connection in fuel lines that may be under pressure and subject to axial loading must use flexible hose assemblies.

(d) Flexible hose must be approved or must be shown to be suitable for the particular application.

(e) No flexible hose that might be adversely affected by exposure to high temperatures may be used where excessive temperatures will exist during operation or after engine shut-down.

(f) Each fuel line within the fuselage must be designed and installed to allow a reasonable degree of deformation and stretching without leakage.

CS 25.994 Fuel system components

ED Decision 2003/2/RM

Fuel system components in an engine nacelle or in the fuselage must be protected from damage which could result in spillage of enough fuel to constitute a fire hazard as a result of a wheels-up landing on a paved runway.

AMC 25.994 Fuel system components

ED Decision 2003/2/RM

FAA Advisory Circular 25.994-1 Design Considerations To Protect Fuel Systems During A Wheels-Up Landing, dated 24/07/86, is accepted by the Agency as providing acceptable means of compliance with CS 25.994.

CS 25.995 Fuel valves

ED Decision 2003/2/RM

In addition to the requirements of CS 25.1189 for shut-off means, each fuel valve must –

(a) *Reserved*.

(b) Be supported so that no loads resulting from their operation or from accelerated flight conditions are transmitted to the lines attached to the valve.

CS 25.997 Fuel strainer or filter

ED Decision 2003/2/RM

There must be a fuel strainer or filter between the fuel tank outlet and the inlet of either the fuel metering device or an engine driven positive displacement pump, whichever is nearer the fuel tank outlet. This fuel strainer or filter must –

(a) Be accessible for draining and cleaning and must incorporate a screen or element which is easily removable;

(b) Have a sediment trap and drain except that it need not have a drain if the strainer or filter is easily removable for drain purposes;

(c) Be mounted so that its weight is not supported by the connecting lines or by the inlet or outlet connections of the strainer or filter itself, unless adequate strength margins under all loading conditions are provided in the lines and connections; and

(d) Have the capacity (with respect to operating limitations established for the engine) to ensure that engine fuel system functioning is not impaired, with the fuel contaminated to a degree (with respect to particle size and density) that is greater than that established for the engine in CS-E.

CS 25.999 Fuel systems drains

ED Decision 2003/2/RM

(a) Drainage of the fuel system must be accomplished by the use of fuel strainer and fuel tank sump drains.

(b) Each drain required by sub-paragraph (a) of this paragraph must –

(1) Discharge clear of all parts of the aeroplane;

(2) Have manual or automatic means for positive locking in the closed position; and

(3) Have a drain valve –

(i) That is readily accessible and which can be easily opened and closed; and

(ii) That is either located or protected to prevent fuel spillage in the event of a landing with landing gear retracted.

CS 25.1001 Fuel jettisoning system

ED Decision 2003/2/RM

(a) A fuel jettisoning system must be installed on each aeroplane unless it is shown that the aeroplane meets the climb requirements of CS 25.119 and 25.121(d) at maximum take-off weight, less the actual or computed weight of fuel necessary for a 15-minute flight comprised of a take-off, go-around, and landing at the airport of departure with the aeroplane configuration, speed, power, and thrust the same as that used in meeting the applicable take-off, approach, and landing climb performance requirements of this CS-25.

(b) If a fuel jettisoning system is required it must be capable of jettisoning enough fuel within 15 minutes, starting with the weight given in sub-paragraph (a) of this paragraph, to enable the aeroplane to meet the climb requirements of CS 25.119 and 25.121(d), assuming that the fuel

is jettisoned under the conditions, except weight, found least favourable during the flight tests prescribed in sub-paragraph (c) of this paragraph.

(c) Fuel jettisoning must be demonstrated beginning at maximum take-off weight with wingflaps and landing gear up and in –

(1) A power-off glide at 1·3 V_{SR1};

(2) A climb at the one-engine inoperative best rate-of-climb speed, with the critical engine inoperative and the remaining engines at maximum continuous power; and

(3) Level flight at 1·3 V_{SR1}, if the results of the tests in the condition specified in sub-paragraphs (c)(1) and (2) of this paragraph show that this condition could be critical.

(d) During the flight tests prescribed in subparagraph (c) of this paragraph, it must be shown that –

(1) The fuel jettisoning system and its operation are free from fire hazard;

(2) The fuel discharges clear of any part of the aeroplane;

(3) Fuel or fumes do not enter any parts of the aeroplane;

(4) The jettisoning operation does not adversely affect the controllability of the aeroplane.

(e) *Reserved.*

(f) Means must be provided to prevent jettisoning the fuel in the tanks used for take-off and landing below the level allowing climb from sea level to 3048 m (10 000 ft) and thereafter allowing 45 minutes cruise at a speed for maximum range. However, if there is an auxiliary control independent of the main jettisoning control, the system may be designed to jettison the remaining fuel by means of the auxiliary jettisoning control.

(g) The fuel jettisoning valve must be designed to allow flight personnel to close the valve during any part of the jettisoning operation.

(h) Unless it is shown that using any means (including flaps, slots and slats) for changing the airflow across or around the wings does not adversely affect fuel jettisoning, there must be a placard, adjacent to the jettisoning control, to warn flight-crew members against jettisoning fuel while the means that change the airflow are being used.

(i) The fuel jettisoning system must be designed so that any reasonably probable single malfunction in the system will not result in a hazardous condition due to unsymmetrical jettisoning of, or inability to jettison, fuel.

OIL SYSTEM

CS 25.1011 General

ED Decision 2003/2/RM

(a) Each engine must have an independent oil system that can supply it with an appropriate quantity of oil at a temperature not above that safe for continuous operation.

(b) The usable oil capacity may not be less than the product of the endurance of the aeroplane under critical operating conditions and the approved maximum allowable oil consumption of the engine under the same conditions, plus a suitable margin to ensure system circulation.

CS 25.1013 Oil tanks

ED Decision 2003/2/RM

(a) *Installation*. Each oil tank installation must meet the requirements of CS 25.967.

(b) *Expansion space*. Oil tank expansion space must be provided as follows:

(1) Each oil tank must have an expansion space of not less than 10% of the tank capacity.

(2) Each reserve oil tank not directly connected to any engine may have an expansion space of not less than 2% of the tank capacity.

(3) It must be impossible to fill the expansion space inadvertently with the aeroplane in the normal ground attitude.

(c) *Filler connection*. Each recessed oil tank filler connection that can retain any appreciable quantity of oil must have a drain that discharges clear of each part of the aeroplane. In addition each oil tank filler cap must provide an oil-tight seal.

(d) *Vent*. Oil tanks must be vented as follows:

(1) Each oil tank must be vented from the top part of the expansion space so that venting is effective under any normal flight condition.

(2) Oil tank vents must be arranged so that condensed water vapour that might freeze and obstruct the line cannot accumulate at any point.

(e) *Outlet*. There must be means to prevent entrance into the tank itself, or into the tank outlet, of any object that might obstruct the flow of oil through the system. No oil tank outlet may be enclosed by any screen or guard that would reduce the flow of oil below a safe value at any operating temperature. There must be a shut-off valve at the outlet of each oil tank, unless the external portion of the oil system (including the oil tank supports) is fireproof.

(f) *Flexible oil tank liners*. Each flexible oil tank liner must be approved or must be shown to be suitable for the particular application.

CS 25.1015 Oil tank tests

ED Decision 2003/2/RM

Each oil tank must be designed and installed so that –

(a) It can withstand, without failure, each vibration, inertia, and fluid load that it may be subjected to in operation; and

(b) It meets the provisions of CS 25.965, except –

(1) The test pressure –

(i) For pressurised tanks used with a turbine engine, may not be less than 34 kPa (5 psi) plus the maximum operating pressure of the tank instead of the pressure specified in CS 25.965(a); and

(ii) For all other tanks, may not be less than 34 kPa (5 psi) instead of the pressure specified in CS 25.965(a); and

(2) The test fluid must be oil at 121°C (250°F) instead of the fluid specified in CS 25.965(c).

CS 25.1017 Oil lines and fittings

ED Decision 2003/2/RM

(a) Each oil line must meet the requirements of CS 25.993 and each oil line and fitting in any designated fire zone must meet the requirements of CS 25.1183.

(b) Breather lines must be arranged so that –

(1) Condensed water vapour that might freeze and obstruct the line cannot accumulate at any point;

(2) The breather discharge does not constitute a fire hazard if foaming occurs or causes emitted oil to strike the pilot's windshield; and

(3) The breather does not discharge into the engine air induction system.

CS 25.1019 Oil strainer or filter

ED Decision 2003/2/RM

(a) Each turbine engine installation must incorporate an oil strainer or filter through which all of the engine oil flows and which meets the following requirements:

(1) Each oil strainer or filter that has a bypass, must be constructed and installed so that oil will flow at the normal rate through the rest of the system with the strainer or filter completely blocked.

(2) The oil strainer or filter must have the capacity (with respect to operating limitations established for the engine) to ensure that engine oil system functioning is not impaired when the oil is contaminated to a degree (with respect to particle size and density) that is greater than that established for the engine under CS-E.

(3) The oil strainer or filter, unless it is installed at an oil tank outlet, must incorporate an indicator that will indicate contamination before it reaches the capacity established in accordance with sub-paragraph (a)(2) of this paragraph.

(4) The bypass of a strainer or filter must be constructed and installed so that the release of collected contaminants is minimised by appropriate location of the bypass to ensure that collected contaminants are not in the bypass flow path.

(5) An oil strainer or filter that has no bypass, except one that is installed at an oil tank outlet, must have a means to connect it to the warning system required in CS 25.1305(c)(7).

CS 25.1021 Oil system drains

ED Decision 2003/2/RM

A drain (or drains) must be provided to allow safe drainage of the oil system. Each drain must –

(a) Be accessible; and

(b) Have manual or automatic means for positive locking in the closed position.

CS 25.1023 Oil radiators

ED Decision 2003/2/RM

(a) Each oil radiator must be able to withstand, without failure, any vibration, inertia, and oil pressure load to which it would be subjected in operation.

(b) Each oil radiator air duct must be located so that, in case of fire, flames coming from normal openings of the engine nacelle cannot impinge directly upon the radiator.

CS 25.1025 Oil valves

ED Decision 2003/2/RM

(a) Each oil shut-off must meet the requirements of CS 25.1189.

(b) The closing of oil shut-off means may not prevent propeller feathering.

(c) Each oil valve must have positive stops or suitable index provisions in the 'on' and 'off' positions and must be supported so that no loads resulting from its operation or from accelerated flight conditions are transmitted to the lines attached to the valve.

CS 25.1027 Propeller feathering system

ED Decision 2003/2/RM

(a) If the propeller feathering system depends on engine oil, there must be means to trap an amount of oil in the tank if the supply becomes depleted due to failure of any part of the lubricating system other than the tank itself.

(b) The amount of trapped oil must be enough to accomplish the feathering operation and must be available only to the feathering pump. (See AMC 25.1027(b).)

(c) The ability of the system to accomplish feathering with the trapped oil must be shown. This may be done on the ground using an auxiliary source of oil for lubricating the engine during operation.

(d) Provision must be made to prevent sludge or other foreign matter from affecting the safe operation of the propeller feathering system.

AMC 25.1027 Inadvertent Propeller Feathering

ED Decision 2003/002/RM

The design of the propeller feathering system should be such that it is possible to complete the feathering and the unfeathering operation under all normal operating conditions.

AMC 25.1027(b) Propeller Feathering

ED Decision 2003/002/RM

The amount of trapped oil should be sufficient to cover one feathering operation; taking into account the maximum oil leakage in the feathering system due to wear and deterioration in service.

COOLING

CS 25.1041 General

ED Decision 2003/2/RM

The powerplant cooling provisions must be able to maintain the temperatures of powerplant components, and engine fluids, within the temperature limits established for these components and fluids, under ground and flight operating conditions, and after normal engine shutdown.

AMC 25.1041 Tests in hot climatic conditions

ED Decision 2003/2/RM

The need for additional tests, if any, in hot climatic conditions should take account of any tests made by the engine constructor to establish engine performance and functioning characteristics and of satisfactory operating experience of similar power units installed in other types of aeroplane.

The maximum climatic conditions for which compliance will be established should be declared and this should not be less severe than the ICAO Intercontinental Maximum Standard Climate (37·8°C (100°F) at sea level). If the tests are conducted under conditions which deviate from the maximum declared ambient temperature, the maximum temperature deviation should not normally exceed 13·9°C (25°F).

CS 25.1043 Cooling tests

ED Decision 2003/2/RM

(a) *General*. Compliance with CS 25.1041 must be shown by tests, under critical ground and flight operating conditions. For these tests, the following apply:

(1) If the tests are conducted under conditions deviating from the maximum ambient atmospheric temperature, the recorded power-plant temperatures must be corrected under sub-paragraph (c) of this paragraph.

(2) No corrected temperatures determined under sub-paragraph (1) of this paragraph may exceed established limits.

(3) *Reserved.*

(b) *Maximum ambient atmospheric temperature.* A maximum ambient atmospheric temperature corresponding to sea level conditions of at least 37.8°C (100°F) must be established. The assumed temperature lapse rate is 6.6°C per thousand meter (3·6°F per thousand feet) of altitude above sea level until a temperature of -56.5°C (–69·7°F) is reached, above which altitude the temperature is considered at -56.5°C (–69·7°F). However, for winterization installations, the applicant may select a maximum ambient atmospheric temperature corresponding to sea-level conditions of less than 37.8°C (100°F).

(c) *Correction factor*. Unless a more rational correction applies, temperatures of engine fluids and powerplant components for which temperature limits are established, must be corrected by adding to them the difference between the maximum ambient atmospheric temperature and the temperature of the ambient air at the time of the first occurrence of the maximum component or fluid temperature recorded during the cooling test.

CS 25.1045 Cooling test procedures

ED Decision 2003/2/RM

(a) Compliance with CS 25.1041 must be shown for the take-off, climb, en-route, and landing stages of flight that correspond to the applicable performance requirements. The cooling tests must be conducted with the aeroplane in the configuration, and operating under the conditions, that are critical relative to cooling during each stage of flight. For the cooling tests, a temperature is 'stabilised' when its rate of change is less than 1°C (2°F) per minute.

(b) Temperatures must be stabilised under the conditions from which entry is made into each stage of flight being investigated, unless the entry condition normally is not one during which component and engine fluid temperatures would stabilise (in which case, operation through the full entry condition must be conducted before entry into the stage of flight being investigated in order to allow temperatures to reach their natural levels at the time of entry). The take-off cooling test must be preceded by a period during which the powerplant component and engine fluid temperatures are stabilised with the engines at ground idle.

(c) Cooling tests for each stage of flight must be continued until –

(1) The component and engine fluid temperatures stabilise;

(2) The stage of flight is completed; or

(3) An operating limitation is reached.

AIR INTAKE SYSTEM

CS 25.1091 Air intake

ED Decision 2003/2/RM

(a) The air intake system for each engine must supply –

(1) The air required by that engine under each operating condition for which certification is requested; and

(2) The air for proper fuel metering and mixture distribution with the air intake system valves in any position.

(b) *Reserved.*

(c) Air intakes may not open within the cowling, unless that part of the cowling is isolated from the engine accessory section by means of a fireproof diaphragm.

(d)

(1) There must be means to prevent hazardous quantities of fuel leakage or overflow from drains, vents, or other components of flammable fluid systems from entering the engine air intake system; and

(2) The aeroplane must be designed to prevent water or slush on the runway, taxiway, or other airport operating surfaces from being directed into the engine air intake ducts in hazardous quantities, and the air intake ducts must be located or protected so as to minimise the ingestion of foreign matter during take-off, landing and taxying. (See AMC 25.1091(d)(2).)

(e) If the engine air intake system contains parts or components that could be damaged by foreign objects entering the air intake, it must be shown by tests or, if appropriate, by analysis that the air intake system design can withstand the foreign object ingestion test conditions of CS-E 790 and CS-E 800 without failure of parts or components that could create a hazard. (See AMC 25.1091(e).)

AMC 25.1091(d)(2) Precipitation Covered Runways

ED Decision 2003/2/RM

1 Except where it is obvious by inspection or other means, that precipitation on the runway would not enter the engine air intake under the declared operating conditions, including the use of the thrust reverser, compliance with the requirements should be demonstrated by tests using tyres representative of those to be approved for operational use. These tests should clear the aeroplane for operation from runways which are normally clear and also for operation in precipitation up to 13 mm (0·5 in) depth of water or dense slush. The tests should be conducted with the minimum depth of 13 mm (0·5 in) and an average depth of 19 mm (0·75 in), or if approval is sought for a greater depth than 13 mm (0·5 in), the average depth should be 1·5 times the depth for which the take-offs are to be permitted, and the minimum depth should be not less than the depth for which take-offs are to be permitted.

2 It should be shown that the engines operate satisfactorily without unacceptable loss of power at all speeds from zero up to lift-off speed and in the attitudes likely to be used. Any special aeroplane handling techniques necessary to ensure compliance with the requirement should comply with the handling techniques assumed in establishing the scheduled performance of the aircraft.

3 The tests may be made in water or slush either by complete take-offs and landings as necessary in the specified precipitation conditions, or by a series of demonstrations in areas of precipitation sufficiently large to permit the spray pattern to become stabilised and to determine engine behaviour and response. Experience has shown that where a trough is used, a length of 70 to 90 m (230 to 295 ft) is usually satisfactory. If marginal results are obtained the effect of the difference between water and slush should be examined.

4 The effects of cross-winds should be examined and where necessary a cross-wind limitation established for inclusion in the Flight Manual for operation from precipitation covered runways.

5 It may be difficult to deduce the effect of low density precipitation (dry snow) from high density testing, but nevertheless clearance of the aeroplane for operation in dense precipitation up to 13 mm (0·5 in) will usually clear the aeroplane for operation in low density precipitation of depths greater than 10 cm (4 in) depth. If clearance is requested for operation in low density precipitation of depths greater than 10 cm (4 in) additional tests (in low density precipitation having a depth close to that for which approval is sought) will be necessary.

6 When auxiliary devices are fitted to prevent spray from being ingested by the engines it will be necessary to do additional tests in low density precipitation to permit operations in depths greater than 25 mm (1 in).

AMC 25.1091(e) Air Intake System

ED Decision 2003/2/RM

The parts or components to be considered are, for example, intake splitters, acoustic lining if in a vulnerable location and inlet duct-mounted instrumentation.

CS 25.1093 Air intake system de-icing and anti-icing provisions

ED Decision 2003/2/RM

(a) *Reserved.*

(b) Turbine engines

(1) Each turbine engine must operate throughout the flight power range of the engine (including idling), without the accumulation of ice on the engine, inlet system components, or airframe components that would adversely affect engine operation or cause a serious loss of power or thrust (see AMC 25.1093(b).) –

(i) Under the icing conditions specified in Appendix C.

(ii) Reserved

(2) Each engine must idle for 30 minutes on the ground, with the air bleed available for engine icing protection at its critical condition, without adverse effect, in an atmosphere that is at a temperature between –9° and –1°C (15° and 30°F) and has a liquid water content not less than 0·3 grams per cubic metre in the form of drops having a mean effective diameter not less than 20 microns, followed by a momentary operation at take-off power or thrust. During the 30 minutes of idle operation, the engine may be run up periodically to a moderate power or thrust setting.

AMC 25.1093(b) Propulsion Engine Air Intakes

ED Decision 2003/2/RM

1 *General*. Two ways of showing compliance with CS 25.1093(b) are given.

1.1 *Method 1*. Method 1 is an arbitrary empirical method based on United Kingdom and French practice. This method is acceptable to all participating countries.

1.2 *Method 2*. Method 2 is a general approach based on US practice in applying FAR Part 25, Appendix C. If this method is used, each application will have to be evaluated on its merits.

2 *Method 1* (Acceptable Means of Compliance)

2.1 In establishing compliance with the requirements of CS 25.1093(b), reference should be made to AMC 25.1419, paragraph 1.

2.2 The intake may be tested with the engine and propeller where appropriate in accordance with the requirements of CS-E 780 and AMC E 780.

2.3 When the intake is assessed separately (e.g. lack of suitable test facilities, change in the design of the intake, intake different from one tested with the engine) it should be shown that the effects of intake icing would not invalidate the engine tests of CS-E. Factors to be considered in such evaluation are:

a. Distortion of the airflow and partial blockage of the intake.

b. The shedding into the engine of intake ice of a size greater than the engine is known to be able to ingest.

c. The icing of any engine sensing devices, other subsidiary intakes or equipment contained within the intake.

d. The time required to bring the protective system into full operation.

2.4 *Tests in Ice-forming Conditions*. An acceptable method of showing compliance with the requirements of CS 25.1093(b), including Appendix C, is given in this paragraph.

2.4.1 When the tests are conducted in non-altitude conditions, the system power supply and the external aerodynamic and atmospheric conditions should be so modified as to represent the required altitude condition as closely as possible. The altitudes to be represented should be as indicated in Table 1 for simulated tests, or that appropriate to the desired temperature in flight tests, except that the test altitude need not exceed any limitations proposed for approval. The appropriate intake incidences or the most critical incidence, should be simulated.

2.4.2 A separate test should be conducted at each temperature condition of Table 1, the test being made up of repetitions of either the cycle –

a. 28 km in the conditions of Table 1 column (a) appropriate to the temperature, followed by 5 km in the conditions of Table 1 column (b) appropriate to the temperature, for a duration of 30 minutes, or

b. 6 km in the conditions of Table 1 column (a) appropriate to the temperature, followed by 5 km in the conditions of Table 1 column (b) appropriate to the temperature, for a duration of 10 minutes.

TABLE 1

Ambient air temperature (°C)	Altitude		Liquid water content (g/m^3)		Mean effective droplet diameter (µm)
	(ft)	(m)	(a)	(b)	
–10	17000	5182	0·6	2·2	20
–20	20000	6096	0·3	1·7	
–30	25000	7620	0·2	1·0	

2.4.3 Either by separate tests, or in combination with those of 2.4.2 it should be demonstrated that the ice accretion is acceptable after a representative delay in the selection of the ice-protection systems, such as might occur during inadvertent entry into the conditions. In lack of other evidence a delay of two minutes (to switch on the system) should normally be achieved. The time for the system to warm up should be represented.

2.4.4 For each test, the ice protection supply should be representative of the minimum engine power for which satisfactory operation in icing conditions is claimed.

2.4.5 If at the conclusion of each of the tests of 2.4.2 there is excessive ice accretion then the heat flow and airflow should be changed simultaneously to simulate an engine acceleration to demonstrate the pattern of ice shedding, which should be acceptable to the engine.

2.4.6 Where the minimum engine power necessary to provide adequate protection (as established in 2.4.2) is greater than that required for descent, an additional test representative of the minimum engine power associated with descent should be conducted by means of either –

a. A run at the –10°C condition of Table 1, column (a), for sufficient duration to cover an anticipated descent of 3048 m (10 000 ft), or

b. A run simulating an actual descent, at the conditions of Table 1 column (a), covering an altitude change of not less than 3048 m (10 000 ft), the highest total temperature reached being not more than 0°C.

2.4.7 If at the conclusion of the test in 2.4.6 there is excessive ice accretion then the heat flow and airflow should be changed simultaneously to simulate an engine acceleration and the ambient temperature should be increased to above 0°C to demonstrate the pattern of total ice shedding which should be acceptable to the engine.

2.4.8 If the intake contains features or devices which could be affected by freezing fog conditions then in addition to the above tests of 2.4.2, 2.4.3 and 2.4.6 a separate test on these parts should be conducted for a duration of 30 minutes, in an atmosphere of –2°C and a liquid water concentration of 0·3 g/m^3, with the heat supply to the tested part as would be available with the engine set to the minimum ground idle conditions approved for use in icing. The mean effective droplet size for the test should be 20 µm. At the end of the period the ice accretion on the tested part should not prevent its proper functioning, nor should the ice be of such size as to hazard the engine if shed.

3 *Method 2* (Interpretative Material)

3.1 In establishing compliance with the requirements of CS 25.1093(b), reference should be made to CS 25.1419 and AMC 25.1419.

3.2 The intake may be tested with the engine and propeller where appropriate in accordance with a programme of tests which results from an analysis of the icing conditions and the engine conditions appropriate to the installation.

3.3 When the intake is assessed separately it should be shown that the effects of intake icing would not invalidate any engine certification tests. Factors to be considered in such evaluation are –

a. Distortion of the airflow and partial blockage of the intake.

b. The shedding into the engine of intake ice of a size greater than the engine is known to be able to ingest.

c. The icing of any engine sensing devices, other subsidiary intakes or equipment contained within the intake.

d. The time required to bring the protective system into full operation.

3.4 When tests are conducted in non-altitude conditions, the system power supply and the external aerodynamic and atmospheric conditions should be so modified as to represent the altitude condition as closely as possible. The appropriate intake incidences or the most critical incidence, should be simulated.

3.5 Following the analysis required in CS 25.1419(b), which will determine the critical icing conditions within the envelope of icing conditions defined by Appendix C Figures 1 to 3 and Appendix C Figures 4 to 6, tests should be conducted at such conditions as are required to demonstrate the adequacy of the design points.

3.6 It should be demonstrated that the ice accretion is acceptable after a representative delay in the selection of the ice protection systems, such as might occur during inadvertent entry into the conditions. In lack of other evidence a delay of two minutes (to switch on the system) should normally be achieved in continuous maximum icing conditions. The time for the system to warm up should be represented.

3.7 If at the conclusion of each of the tests there is excessive ice accretion then the heat flow and airflow should be changed simultaneously to simulate an engine acceleration to demonstrate the pattern of ice shedding, which should be acceptable to the engine.

3.8 Where the minimum engine power necessary for adequate protection as established above is greater than that required for descent, this should be considered in the analysis, and test evidence may have to be provided to demonstrate acceptability. The icing conditions and vertical extent are as in Figure 1 of Appendix C. Any ice able to be shed from the intake into the engine should be acceptable to the engine.

3.9 If the intake contains features or devices which could be affected by freezing fog conditions then a separate assessment for these parts should be conducted assuming a duration of 30 minutes and an atmosphere of –2°C, and a liquid water concentration of 0·3 g/m^3, with the heat supply to the tested part as would be available with the engine set to the minimum ground idle conditions approved for use in icing. The mean effective droplet size should be 20 µm. At the end of the period the ice accretion on the part should not prevent its proper functioning, nor should the ice be of such size as to hazard the engine if shed.

CS 25.1103 Air intake system ducts and air duct systems

ED Decision 2003/2/RM

(a) *Reserved.*

(b) Each air intake system must be –

(1) Strong enough to prevent structural failure resulting from engine surging; and

(2) Fire-resistant if it is in any fire zone for which a fire extinguishing system is required.

(c) Each duct connected to components between which relative motion could exist must have means for flexibility.

(d) For bleed air systems no hazard may result if a duct rupture or failure occurs at any point between the engine port and the aeroplane unit served by the bleed air. (See AMC 25.1103(d).)

AMC 25.1103(d) Air intake system ducts

ED Decision 2003/2/RM

For a single failure case leading to a fire and air duct rupture, consideration should be given to the possibility of fire aggravation due to air flowing into a designated fire zone of an engine from the remaining engine(s), or another source outside the affected fire zone.

EXHAUST SYSTEM

CS 25.1121 General

ED Decision 2003/2/RM

For powerplant installations the following apply:

(a) Each exhaust system must ensure safe disposal of exhaust gases without fire hazard or carbon monoxide contamination in any personnel compartment. For test purposes, any acceptable carbon monoxide detection method may be used to show the absence of carbon monoxide. (See AMC 25.1121(a).)

(b) Each exhaust system part with a surface hot enough to ignite flammable fluids or vapours must be located or shielded so that leakage from any system carrying flammable fluids or vapours will not result in a fire caused by impingement of the fluids or vapours on any part of the exhaust system including shields for the exhaust system. (See AMC 25.1121(b).)

(c) Each component that hot exhaust gases could strike, or that could be subjected to high temperatures from exhaust system parts, must be fireproof. All exhaust system components must be separated by fireproof shields from adjacent parts of the aeroplane that are outside the engine compartment.

(d) No exhaust gases may discharge so as to cause a fire hazard with respect to any flammable fluid vent or drain.

(e) No exhaust gases may discharge where they will cause a glare seriously affecting pilot vision at night.

(f) Each exhaust system component must be ventilated to prevent points of excessively high temperature.

(g) Each exhaust shroud must be ventilated or insulated to avoid, during normal operation, a temperature high enough to ignite any flammable fluids or vapours external to the shroud.

AMC 25.1121(a) General

ED Decision 2003/2/RM

1 If necessary, each exhaust system should be provided with drains to prevent hazardous accumulation of fuel under all conditions of operation.

2 Tests should be made to demonstrate compliance with CS 25.1121(a) and these should include engine starting in downwind conditions and thrust reversal.

AMC 25.1121(b) General

ED Decision 2003/2/RM

Leakage should be interpreted to include fuel discharged from the jet pipe under false start conditions both on the ground and in flight. It should be demonstrated that successive attempts to restart do not create a fire hazard. The maximum time for complete drainage of fuel following a false start should be established. This period will be used to determine the minimum interval between start attempts.

CS 25.1123 Exhaust piping

ED Decision 2003/2/RM

For powerplant installations, the following apply:

(a) Exhaust piping must be heat and corrosion resistant, and must have provisions to prevent failure due to expansion by operating temperatures.

(b) Piping must be supported to withstand any vibration and inertia loads to which it would be subjected in operation; and

(c) Piping connected to components between which relative motion could exist must have means for flexibility.

AMC 25.1125(a)(3) Exhaust Heat Exchangers

ED Decision 2003/2/RM

The cooling provisions should be arranged so that it is not possible to use the heat exchanger unless the cooling provisions are in operation.

POWERPLANT CONTROLS AND ACCESSORIES

CS 25.1141 Powerplant controls: general

ED Decision 2005/006/R

Each powerplant control must be located, arranged, and designed under CS 25.777 to 25.781 and marked under CS 25.1555. In addition, it must meet the following requirements:

(a) Each control must be located so that it cannot be inadvertently operated by persons entering, leaving, or moving normally in, the cockpit.

(b) Each flexible control must be approved or must be shown to be suitable for the particular application.

(c) Each control must have sufficient strength and rigidity to withstand operating loads without failure and without excessive deflection.

(d) Each control must be able to maintain any set position without constant attention by flight-crew members and without creep due to control loads or vibration.

(e) The portion of each powerplant control located in a designated fire zone that is required to be operated in the event of fire must be at least fire resistant. (See CS 25.903(c).)

(f) For Powerplant valve controls located in the flight deck there must be a means:

(1) for the flightcrew to select each intended position or function of the valve; and

(2) to indicate to the flightcrew:

(i) the selected position or function of the valve; and

(ii) when the valve has not responded as intended to the selected position or function.

[Amdt 25/1]

AMC 25.1141(f) Powerplant controls, general

ED Decision 2003/2/RM

A continuous indicator need not be provided.

CS 25.1143 Engine controls

ED Decision 2003/2/RM

(a) There must be a separate power or thrust control for each engine.

(b) Power and thrust controls must be arranged to allow –

(1) Separate control of each engine; and

(2) Simultaneous control of all engines.

(c) Each power and thrust control must provide a positive and immediately responsive means of controlling its engine.

(d) For each fluid injection (other than fuel) system and its controls not provided and approved as part of the engine, the flow of the injection fluid must be adequately controlled.

(e) If a power or thrust control incorporates a fuel shut-off feature, the control must have a means to prevent the inadvertent movement of the control into the shut-off position. The means must –

(1) Have a positive lock or stop at the idle position; and

(2) Require a separate and distinct operation to place the control in the shut-off position.

CS 25.1145 Ignition switches

ED Decision 2003/2/RM

(a) Ignition switches must control each engine ignition circuit on each engine.

(b) There must be means to quickly shut off all ignition by the grouping of switches or by a master ignition control.

(c) Each group of ignition switches except ignition switches for turbine engines for which continuous ignition is not required, and each master ignition control must have a means to prevent its inadvertent operation.

CS 25.1149 Propeller speed and pitch controls

ED Decision 2003/2/RM

(a) There must be a separate propeller speed and pitch control for each propeller.

(b) The controls must be grouped and arranged to allow –

(1) Separate control of each propeller; and

(2) Simultaneous control of all propellers.

(c) The controls must allow synchronisation of all propellers.

(d) The propeller speed and pitch controls must be to the right of, and at least 25 mm (one inch) below, the pilot's throttle controls.

CS 25.1153 Propeller feathering controls

ED Decision 2003/2/RM

(a) There must be a separate propeller feathering control for each propeller. The control must have means to prevent its inadvertent operation.

(b) If feathering is accomplished by movement of the propeller pitch or speed control lever, there must be means to prevent the inadvertent movement of this lever to the feathering position during normal operation.

CS 25.1155 Reverse thrust and propeller pitch settings below the flight regime

ED Decision 2003/2/RM

Each control for selecting propeller pitch settings below the flight regime (reverse thrust for turbo-jet powered aeroplanes) must have the following:

(a) A positive lock or stop which requires a separate and distinct operation by the flight crew to displace the control from the flight regime (forward thrust regime for turbo-jet powered

aeroplanes), and it must only be possible to make this separate and distinct operation once the control has reached the flight idle position.

(b) A means to prevent both inadvertent and intentional selection or activation of propeller pitch settings below the flight regime (reverse thrust for turbo-jet powered aeroplanes) when out of the approved in-flight operating envelope for that function, and override of that means is prohibited.

(c) A reliability, such that the loss of the means required by sub-paragraph (b) above is remote.

(d) A caution provided to the flight crew when the means required by sub-paragraph (b) above is lost.

(e) A caution provided to the flight crew when a cockpit control is displaced from the flight regime (forward thrust regime for turbo-jet powered aeroplanes) into a position to select propeller pitch settings below the flight regime (reverse thrust for turbo-jet powered aeroplanes) outside the approved in-flight operating envelope. This caution need not be provided if the means required by sub-paragraph (b) is a mechanical baulk that prevents movement of the control.

AMC 25.1155 Reverse thrust and propeller pitch settings below the flight regime

ED Decision 2003/2/RM

1. PURPOSE. This AMC provides guidance for demonstrating compliance with the certification requirement relating to controls which regulate reverse thrust or propeller pitch settings below the flight regime on Large Aeroplanes.

2. RELATED CERTIFICATION SPECIFICATIONS.

Paragraphs which prescribe requirements for the design, substantiation, and certification relating to the control of reverse thrust and propeller pitch settings below the flight regime of Large Aeroplanes include:

§25.777	Cockpit Controls.
§25.779	Motion and effect of cockpit controls
§25.781	Cockpit control knob shape
§25.901	Installation
§25.903	Engines
§25.933	Reversing systems
§25.1141	Powerplant controls: General
§25.1143	Engine controls
§25.1149	Propeller speed and pitch controls
§25.1155	Reverse thrust and propeller pitch settings below the flight regime
§25.1305	Powerplant instruments
§25.1309	Equipment, systems, and installations.
§25.1322	Warning, caution, and advisory lights
§25.1337	Powerplant instruments

3. APPLICABILITY.

The basic provisions of CS 25.1155 require that the control for selecting reverse thrust (propeller pitch settings below the flight regime) have a positive lock or stop at the flight idle position as

well as separate and distinct operation by the flight crew to displace the control from the in-flight regime. These basic provisions are applicable to all Large Aeroplanes.

The specific provisions of CS 25.1155 are applicable to the control system protecting against the intentional or the inadvertent in-flight selection of the thrust reverser for turbojet powered airplanes or propeller operation at pitch settings below the flight regime for turboprop powered airplanes. However, the specific provisions would not be applicable to a turbojet powered airplane whose reverser was certified for in-flight use or to a turbo-propeller powered airplane whose propellers were certified for pitch settings below the normal in-flight operating regime.

In addition to the 25.1155 applicability limitations noted above, the intentional selection provisions should not be interpreted to include a pilot who knowingly gains in-flight access to the prohibited engine control regime by:

a) disabling a protective control system (i.e. throttle baulk or warning) by pulling circuit breaker, or

b) ignoring a clearly annunciated protective control system failure warning or caution message.

4. BACKGROUND.

CS 25.1155 was derived from the equivalent FAA rule and therefore the requirement history below relates to the development of FAR 25.1155. Also the operational occurrences and the development of continued airworthiness solutions mentioned below, are based, largely, on the U.S experience.

a. *Requirement History.* The requirements to guard against inadvertent operation of both cockpit mounted propeller and turbojet reverse control lever(s) date back to CAR 4b (4b.474a). When part 25 was codified in 1965, only the turbojet reverse section of the subject requirement was retained as FAR §25.1155. In 1967, Amendment 25-11 broadened §25.1155 to once again include protection against inadvertent inflight operation of thrust reversers and propeller pitch settings below the flight regime. This Amendment required the cockpit propeller control to incorporate positive locks or stops at the flight idle position, and further specified that the control means must require a separate and distinct operation by the crew, in order to displace the propeller control from the flight regime.

b. *Operational Experience - Turbo-propeller powered Airplanes*. In-service experience during the late 1980s and 1990s of some turbo-propeller powered transport category airplanes, has shown that intentional or inadvertent in-flight operation of the propeller control systems below flight idle has produced two types of hazardous, and in some cases, catastrophic conditions:

(i) Permanent engine damage and total loss of thrust on all engines when the propellers that were operating below the flight regime drove the engines to over-speed, and;

(ii) Loss of airplane control because at least one propeller operated below the flight regime during flight creating asymmetric control conditions.

As a result of this unsatisfactory service experience, in-flight beta lockout systems were retroactively required (via Airworthiness Directives) on several transport category turboprop airplanes. These beta lockout systems were required only after it was determined that increased crew training, installation of cockpit placards warning crews

not to use beta in flight, and stronger wording in AFM warnings and limitations did not preclude additional in-flight beta events.

In addition to the continued airworthiness issues noted above, the FAA also recognized the need to update the FAR requirement to require some form of design improvements for new airplanes. {NOTE: RWB additional words to complete the sentence.} Until the rule changes noted above are complete, the FAA is using the no unsafe feature or characteristic provisions of 21.21(b)(2) to require installation of beta lockout systems on new transport category turbo-propeller powered airplanes.

Intentional selection of beta mode/reverse in flight for rapid aircraft deceleration was not specifically addressed by this regulation. Also, FAR 25.933(b) had been interpreted as not requiring, for turbo-propeller aircraft, an interlock or other automatic device to prohibit movement of the power lever by the flight crew below the flight idle stop when the aircraft is in flight.

Consequently, initial FAA certification of transport category turbo-propeller aircraft has not required an inflight beta lockout device to prevent intentional selection of the beta mode/reverse in flight.

Typical beta lockout systems currently use wheel spin-up, squat switch activation, gear-up switch activation, or combinations of these. Certain airplanes, especially those with low wings and without ground spoilers, have a tendency to float during landing. In the case of these airplanes, the application of beta may be delayed on a wet runway because, while the airplane is floating, the ground logic or the wheel spin-up may not activate immediately.

Landing performance of turbo-propeller-powered airplanes is based on ground idle availability, which is part of the beta range. Turbo-propeller-powered airplanes landing on field length-limited runways with delayed beta application present a potential hazard. Overruns are more likely to occur if operating under part 91 (unfactored field lengths); however, the risks are also present if operating under parts 121 or 135 (factored field lengths) on a wet runway. Paragraph (b) of the rule prohibits override, however, there are several acceptable methods that may be used to overcome the deficiencies of the squat switch or wheel spin-up logic alone, such as the use of a radar altimeter or multiple air/ground logic inputs.

c. *Operational Experience - Turbo-jet (Turbo-fan) Powered Airplanes.* For turbojet (turbofan) thrust reversers, there has not been such a bad accident experience of pilot initiated thrust reverser deployment as for the turbo-propeller airplanes, but they have occurred. There has also been a number of reported cases, where the thrust reversers have been selected before touch down, in order to minimize the landing roll. In these cases, the provision of a weight-on-wheels (WOW) interlock as part of the thrust reverser design, prevented the deployment of the reverser. However, the basic concern about the need to avoid a reversing condition, outside any approved operating regime, is the same for a thrust reverser equipped aircraft, as it is for a propeller powered aircraft i.e. the prevention of Catastrophic failure conditions.

§25.933(a) and its AC / AMC describe means by which the thrust reverser system can be shown to have sufficient system integrity, to meet the required Safety Objectives. If the reliability method of compliance with §25.933(a) is used, the probability of an unwanted reverser deployment in flight will be shown to be <1E-09. In this case, where very low probabilities of system failures are demonstrated, it was considered to be inappropriate that a single event of pilot selection could cause the same effect, - a reverser deployment.

Recognition that occurrences of thrust reverser selection in flight have occurred, reinforced by the growing perception that human factors need to be considered, has resulted in thrust reverser controls being considered equally. This approach ensures consistency in the application of §25.1155 to both turbo-prop and turbo-jet (turbo-fan) reversing systems.

The design objective sought by §25.1155 has been a common design practice for many turbo-jet (turbofan) thrust reverser designs. This rule establishes that a means to prevent crew selection or activation of reverse thrust or propeller pitch settings below the flight regime must be provided, as the minimum required standard.

d. *Override Systems*. Historically, some turbo-propeller systems have been provided with an override capability, such that on landing, if the selection of pitch below flight idle is not successful - because of system failures or because signals used in the system may not have transitioned to the ground mode - the flight crew could select the override function to enable use of pitch below flight idle during ground operation.

As mentioned above, many turbo-jet (turbofan) powered airplanes equipped with thrust reversers have utilized weight-on-wheels, or other air-ground logic, to prevent selection or activation of thrust reversers in flight. Generally, these systems have been capable of successful operation, despite not being equipped with any form of over-ride. It is the intention of the revised version of §25.1155 to prevent any selection or activation of propeller pitch below the flight regime or reverse thrust in flight. The provision of any override, which would allow selection or activation of propeller pitch below the flight regime or reverse thrust out the approved in flight envelope for that function would not comply with the §25.1155. The design of the system to show compliance with §25.1155 will need to take into account the Safety Objectives associated with the maintenance of the required landing performance.

5. DEFINITIONS.

a. *Approved in-flight operating envelope.* An area of the Normal Flight Envelope where a function has been accepted as suitable by the Authorities.

b. *Catastrophic.* See AMC 25.1309.

c. *Continued Safe Flight and Landing.* See AMC 25.1309.

d. *Failure.* See AMC 25.1309.

e. *Flight idle position.* The position of thrust/power lever corresponding to the minimum forward thrust, power or pitch setting authorized in flight.

f. *Inadvertent.* Action performed by the pilot who did not mean to do it.

g. *In-flight.* That part of aeroplane operation beginning when the wheels are no longer in contact with the ground during the takeoff and ending when the wheels again contact the ground during landing.

h. *Intentional.* Action performed by the pilot who meant to do it

i. *Propeller pitch control system.* All those system components which enable the flight crew to command and control propeller pitch

j. *Remote.* See AMC 25.1309.

k. *Reverse control system.* All those system components which enable the flight crew to command and control the thrust reverser

l. *Separate and distinct.* More than or in addition to a continuation of motion required for movement and obvious to each member of the flight crew

m. *Thrust Reversal.* A movement of all or part of the thrust reverser from the forward thrust position to a position that spoils or redirects the engine airflow.

n. *Turbojet (or turbofan).* A gas turbine engine in which propulsive thrust is developed by the reaction of gases being directed through a nozzle.

o. *Turbo-propeller.* A gas turbine engine in which propulsive thrust is developed by the propeller

6. COMPLIANCE with CS 25.1155.

a. *Cockpit controls.* The cockpit controls mean the control devices used by the crew to select the reverse thrust or the propeller pitch below the flight regime. (See CS 25.1141, 25.1143 and 25.1149)

Cockpit controls design must be adequate to permit the crew to perform the handling of the aircraft and to follow the procedures as per AFM, while mitigating crew errors.

b. *Preventative means.* Acceptable means to prevent intentional or inadvertent selection or activation of reverse thrust or propeller pitch below the flight regime can be:

1) Devices to prevent movement of the cockpit control which prevents selection, or

2) Logic in the Thrust Reverser or Propeller Control which prevents activation.

c. *Separate and distinct.* To move cockpit controls from the Flight Idle position must require a separate and distinct operation of the control to pass from the Flight Idle position to positions approved only for ground operation. The control must also have features to prevent inadvertent movement of the control through the Flight Idle position. It must only be possible to make this separate and distinct operation once the control has reached the Flight Idle position.

Separate and distinct is more than or in addition to a continuation of motion required for movement to the Flight Idle setting and must be obvious to the flight crew.

Examples of separate and distinct controls that have been used in previous designs are as follows:

i) Physically separate forward/reverse [below flight idle] control levers or mechanisms.

ii) Manually actuated latches located on or in the vicinity of the control that cannot be actuated until Flight Idle.

iii) A required change in direction of operation of the control from that needed for movement to Flight Idle.

Examples of separate and distinct control operation, which would not be acceptable include:

i) a separate operation, which can be activated away from the Flight Idle position, so that movement of the control from forward thrust to below the flight regime or thrust reversal can be accomplished with a single action.

ii) any separate operation, where latches or equivalent devices can be pre-loaded by the pilot so that a single movement of the control, enables movement below flight idle.

iii) any control arrangement, where it can be ascertained that normal wear and tear could cause the separate and distinct action to be lost.

d. *Cockpit indications.* The overall indication requirements for Thrust Reverser Control System and Propeller Pitch Control System are given in the CS 25.933, 25.1305(d)(2), 25.1309(c), 25.1322, and 25.1337(e) paragraphs and their associated AMCs. The following text adds some specific guidance with respect to the requirements of paragraph CS 25.1155(d) and (e).

Sub-paragraphs "(d)" and "(e)" of the rule require crew cautions to be provided for two conditions:

"(d)" when the means 'to prevent both inadvertent and intentional selection of propeller pitch settings below the flight regime (thrust reversal for turbo-jet powered airplanes) when out of the approved in-flight operating envelope for that function' is lost. The purpose of this caution is to inform the flight crew that a fault has occurred to the propeller pitch control system or the thrust reverser control system, so that the protection means is no longer available and any movement of the control below the flight regime (forward thrust regime) may cause a low pitch/high drag condition or thrust reverser deployment. With this information, the flight crew will be able to take appropriate precautions, as advised by approved Manuals and reinforced by their training, to minimise the possibility of a hazardous condition. Without this caution, a fault in the protection means could allow an unsafe condition to occur, whereby any inadvertent or intentional movement of the control below the flight regime could cause a hazardous low pitch or reverse thrust condition.

"(e)" when the cockpit control is displaced from the flight regime (forward thrust for turbo-jet powered airplanes) into a position to select propeller pitch settings below the flight regime (thrust reversal for turbo-jet powered airplanes) and the airplane is outside the approved in-flight operating envelope for that function. On some anticipated system designs, the pilot will have the ability to move the cockpit control below the flight regime (into thrust reverse for turbo-jet powered airplanes) with no restriction, other than the 'separate and distinct operation' required by CS 25.1155(a). For this type of design, the means to prevent propeller pitch settings below the flight regime (reverse thrust for turbo-jet powered airplanes) when out of the approved in-flight operating envelope for that function will be a part of the propeller pitch control system or the thrust reverser system. Whilst there is no immediate hazard at that point, the control is not in the proper position for flight operations and the flight crew need to be made aware of that situation, so that they can take the appropriate action. In some of the accidents, where the control had been moved into the 'below flight' regime, it was not clear whether this control movement had been inadvertent or intentional. Provision of this caution will give the crew a clear indication of any incorrect placement of the control however the control was positioned. For any design, where there is approval for selection of propeller pitch settings below the flight regime (reverse thrust for turbo-jet powered airplanes), there will be no need to provide this caution when the aircraft is in the approved in-flight operating envelope for that function. Also, as made clear in CS 25.1155(e), there is no requirement to provide any caution for control movement, when on the ground.

e. Reliability considerations. The intention of CS 25.1155(b) is for the aircraft design to include a means to prevent the flight crew selecting (or activating) propeller pitch settings

below the flight regime or reverser deployment, when the aircraft is not in the approved in-flight operating envelope for that function. The introduction of the rule stems directly from a number of cases, where such a selection has caused accidents. Because of a large variability in the current perception of the future occurrence rate for this type of flight crew error, a target reliability level for the prevention means is included in the rule, see CS 25.1155(c). This level of reliability is expected to give a high degree of protection from the unwanted selection or activation of low propeller pitch or reverser deployment. The provision of the cautions should provide the necessary safeguard, on the few occasions when the prevention means fails. Additionally, this target safety level should not be inconsistent with the required availability of the reversing function for landing performance.

The safety assessment methods established by CS 25.901(c) and CS 25.1309(b) are appropriate for the determination of the reliability level required by CS 25.1155(c) and for assessing the effects of any other failure conditions or malfunctions.

f. *Reverser/pitch below flight regime availability on ground.* Landing or Aborted take-off distances on wet runways usually take credit for the braking effect created by reverse thrust or propeller pitch below flight idle. Therefore availability of these systems when in the approved operating envelope must be maintained.

It must therefore be shown that failures in the system provided to meet CS 25.1155(b) do not degrade significantly the availability of the reverse thrust or low pitch selection on ground.

7. INSTRUCTIONS FOR CONTINUED AIRWORTHINESS.

a. *Manufacturing/Quality.* Due to the criticality of the reverse thrust function or pitch below flight regime function, manufacturing and quality assurance processes should be assessed and implemented, as appropriate, to ensure the design integrity of the critical components.

b. *Maintenance and Alterations.* Reference to CS 25.901(b)(2) and CS 25.1529/Appendix H. The criticality of the control system requires that maintenance and maintainability be emphasized in the design process and derivation of the maintenance control program, as well as subsequent field maintenance, repairs, or alterations.

c. *Manuals- Limitations/Procedures.* Prohibition of use of reverse thrust or pitch settings below the flight regime when outside the approved in-flight operating envelope for that function should be introduced in AFM.

Cautions as described in 1155(d) and (e) and their related procedures should be included in the Operations Manual.

CS 25.1161 Fuel jettisoning system controls

ED Decision 2003/2/RM

Each fuel jettisoning system control must have guards to prevent inadvertent operation. No control may be near any fire extinguisher control or other control used to combat fire.

CS 25.1163 Powerplant accessories

ED Decision 2003/2/RM

(a) Each engine-mounted accessory must –

(1) Be approved for mounting on the engine involved;

(2) Use the provisions on the engine for mounting; and

(3) Be sealed to prevent contamination of the engine oil system and the accessory system.

(b) Electrical equipment subject to arcing or sparking must be installed to minimise the probability of contact with any flammable fluids or vapours that might be present in a free state.

(c) If continued rotation of an engine-driven cabin supercharger or of any remote accessory driven by the engine is hazardous if malfunctioning occurs, there must be means to prevent rotation without interfering with the continued operation of the engine.

CS 25.1165 Engine ignition systems

ED Decision 2003/2/RM

(a) Each battery ignition system must be supplemented by a generator that is automatically available as an alternate source of electrical energy to allow continued engine operation if any battery becomes depleted.

(b) The capacity of batteries and generators must be large enough to meet the simultaneous demands of the engine ignition system and the greatest demands of any electrical system components that draw electrical energy from the same source.

(c) The design of the engine ignition system must account for –

(1) The condition of an inoperative generator;

(2) The condition of a completely depleted battery with the generator running at its normal operating speed; and

(3) The condition of a completely depleted battery with the generator operating at idling speed, if there is only one battery.

(d) *Reserved.*

(e) No ground wire for any engine may be routed through a fire zone of another engine unless each part of that wire within that zone is fireproof.

(f) Each ignition system must be independent of any electrical circuit not used for assisting, controlling, or analysing the operation of that system.

(g) There must be means to warn appropriate flight-crew members if the malfunctioning of any part of the electrical system is causing the continuous discharge of any battery necessary for engine ignition.

(h) Each engine ignition system of a turbine powered aeroplane must be considered an essential electrical load.

CS 25.1167 Accessory gearboxes

ED Decision 2003/2/RM

For aeroplanes equipped with an accessory gearbox that is not certificated as part of an engine –

(a) The engine with gearbox and connecting transmissions and shafts attached must be subjected to the test specified in CS-E 160 and CS-E 740, as applicable.

(b) The accessory gearbox must meet the requirements of CS-E 80 and CS-E 590, as applicable; and

(c) Possible misalignments and torsional loadings of the gearbox, transmission, and shaft system, expected to result under normal operating conditions must be evaluated.

POWERPLANT FIRE PROTECTION

CS 25.1181 Designated fire zones: regions included

ED Decision 2003/2/RM

(a) Designated fire zones are –

(1) The engine power section;

(2) The engine accessory section;

(3) Any complete powerplant compartment in which no isolation is provided between the engine power section and the engine accessory section;

(4) *Reserved.*

(5) Any fuel-burning heater and other combustion equipment installation described in CS 25.859;

(6) The compressor and accessory sections of turbine engines; and

(7) Combustor, turbine, and tailpipe sections of turbine engine installations that contain lines or components carrying flammable fluids or gases.

(b) Each designated fire zone must meet the requirements of CS 25.863, 25.867, 25.869, and 25.1185 to 25.1203

AMC 25.1181 Designated fire zones

ED Decision 2003/2/RM

1 ISO 2685, (15 JULY 1992) 'Aircraft – Environmental conditions and test procedures for airborne equipment – Resistance to fire in designated fire zones', gives test conditions and methods of demonstrating compliance with the 'Fire-resistant' and 'Fireproof' requirements.

2 Tests to demonstrate compliance with the standard grades of resistance to fire may not be necessary if similarity can be shown with other components which have been tested in accordance with this standard.

3 For example, materials which are considered satisfactory for use in firewalls without being subjected to fire tests include –

a. Stainless steel sheet 0·4 mm (0·016 in) thick;

b. Mild steel sheet protected against corrosion 0·45 mm (0·018 in) thick; and

c. Titanium sheet 0·45 mm (0·018 in) thick.

CS 25.1182 Nacelle areas behind firewalls, and engine pod attaching structures containing flammable fluid lines

ED Decision 2003/2/RM

(a) Each nacelle area immediately behind the firewall, and each portion of any engine pod attaching structure containing flammable fluid lines, must meet each requirement of CS 25.1103(b), 25.1165(e), 25.1183, 25.1185(c), 25.1187, 25.1189 and 25.1195 to 25.1203, including those concerning designated fire zones. However, engine pod attaching structures need not contain fire detection or extinguishing means.

(b) For each area covered by sub-paragraph (a) of this paragraph that contains a retractable landing gear, compliance with that sub-paragraph need only be shown with the landing gear retracted.

CS 25.1183 Flammable fluid-carrying components

ED Decision 2003/2/RM

(a) Except as provided in sub-paragraph (b) of this paragraph, each line, fitting, and other component carrying flammable fluid in any area subject to engine fire conditions, and each component which conveys or contains flammable fluid in a designated fire zone must be fire resistant, except that flammable fluid tanks and supports in a designated fire zone must be fireproof or be enclosed by a fireproof shield unless damage by fire to any non-fireproof part will not cause leakage or spillage of flammable fluid. Components must be shielded or located to safeguard against the ignition of leaking flammable fluid.

(b) Sub-paragraph (a) of this paragraph does not apply to –

(1) Lines, fittings and components which are already approved as part of a type certificated engine; and

(2) Vent and drain lines, and their fittings, whose failure will not result in, or add to, a fire hazard.

(c) All components, including ducts, within a designated fire zone must be fireproof if, when exposed to or damaged by fire, they could –

(1) Result in fire spreading to other regions of the aeroplane, or

(2) Cause unintentional operation of, or inability to operate, essential services or equipment.

CS 25.1185 Flammable fluids

ED Decision 2003/2/RM

(a) No tank or reservoir that is a part of a system containing flammable fluids or gases may be in a designated fire zone unless the fluid contained, the design of the system, the materials used in the tank, the shut-off means, and all connections, lines and controls provide a degree of safety equal to that which would exist if the tank or reservoir were outside such a zone.

(b) There must be at least 13 mm (0·5 inches) of clear airspace between each tank or reservoir and each firewall or shroud isolating a designated fire zone.

(c) Absorbent materials close to flammable fluid system components that might leak must be covered or treated to prevent the absorption of hazardous quantities of fluids.

CS 25.1187 Drainage and ventilation of fire zones

ED Decision 2003/2/RM

(a) There must be complete drainage of each part of each designated fire zone to minimise the hazards resulting from failure or malfunctioning of any component containing flammable fluids. The drainage means must be –

(1) Effective under conditions expected to prevail when drainage is needed; and

(2) Arranged so that no discharge fluid will cause an additional fire hazard.

(b) Each designated fire zone must be ventilated to prevent the accumulation of flammable vapours.

(c) No ventilation opening may be where it would allow the entry of flammable fluids, vapours, or flame from other zones.

(d) Each ventilation means must be arranged so that no discharged vapours will cause an additional fire hazard.

(e) Unless the extinguishing agent capacity and rate of discharge are based on maximum air flow through a zone, there must be a means to allow the crew to shut-off sources of forced ventilation to any fire zone except the engine power section of the nacelle and the combustion heater ventilating air ducts.

CS 25.1189 Shut-off means

ED Decision 2005/006/R

(a) Each engine installation and each fire zone specified in CS 25.1181(a)(5) must have a means to shut off or otherwise prevent hazardous quantities of fuel, oil, de-icer, and other flammable fluids, from flowing into, within, or through any designated fire zone, except that shutoff means are not required for –

(1) Lines, fittings, and components forming an integral part of an engine; and

(2) Oil systems in which all components of the system in a designated fire zone, including the oil tanks, are fireproof or located in areas not subject to engine fire conditions.

(b) The closing of any fuel shut-off valve for any engine may not make fuel unavailable to the remaining engines.

(c) Operation of any shut-off means may not interfere with the later emergency operation of other equipment, such as the means for feathering the propeller.

(d) Each flammable fluid shut-off means and control must be fireproof or must be located and protected so that any fire in a fire zone will not affect its operation.

(e) No hazardous quantity of flammable fluid may drain into any designated fire zone after shut-off.

(f) There must be means to guard against inadvertent operation of the shut-off means and to make it possible for the crew to reopen the shut-off means in flight after it has been closed.

(g) Each tank-to-engine shut-off valve must be located so that the operation of the valve will not be affected by powerplant or engine mount structural failure.

(h) Each shut-off valve must have a means to relieve excessive pressure accumulation unless a means for pressure relief is otherwise provided in the system.

[Amdt 25/1]

AMC 25.1189 Flammable fluid shut-off means

ED Decision 2005/006/R

1. PURPOSE.

This Acceptable Means of Compliance (AMC) provides information and guidance concerning a means, but not the only means, of compliance with CS 25.1189 which pertains to the shut-off of flammable fluids for fire zones of Transport Category Aeroplanes. Accordingly, this material is neither mandatory nor regulatory in nature and does not constitute a regulation. In lieu of following this method, the applicant may elect to establish an alternate method of compliance

that is acceptable to the Agency for complying with the requirements of the CS-25 paragraphs listed below.

2. SCOPE.

This AMC provides guidance for a means of showing compliance with regulations applicable to flammable fluid shut-off capability in Transport Category Airplanes. This guidance applies to new designs as well as modifications such as the installation of new engines or APU's or modifications of existing designs that would affect compliance to the requirements for flammable fluid shut-off means to a fire zone.

3. RELATED CERTIFICATION SPECIFICATIONS.

CS 25.863, CS 25.1181, CS 25.1182, CS 25.1189, CS 25J1189.

4. OBJECTIVE

This advisory material provides guidelines for determining hazardous quantity of flammable fluids:

A. With respect to the requirement CS 25.1189(a) that each fire zone must have a means to shut-off or otherwise prevent hazardous quantities of flammable fluids from flow into, within, or through the fire zone.

B. With respect to the requirement of CS 25.1189(e) that no hazardous quantity of flammable fluid may drain into any designated fire zone following shut-off.

5. BACKGROUND.

Guidance is required because of different and sometimes inconsistent interpretation of what hazardous quantity means.

Service History: The fire zone fire safety service history of CS-25 turbine engine aircraft has been very good, especially considering the potential hazards involved. This is attributed to the multi-faceted fire protection means required by CS-25. While it is not generally possible to define the contribution of each individual fire protection means, such as flammable fluid shut-off means, it is noted that the relatively few serious accidents that have occurred often involve initiating events such as engine separation or rotor non-containment, which can potentially negate some fire protection means, and in which flammable fluid shut-off means represent an important, or possibly sole, backup.

Previous incidents have shown that hydraulic system leaks have fuelled fires, especially when fluid mist is produced at high pressure due to small (pinhole) leaks. This type of leakage can be of considerable duration, even with a limited quantity of flammable fluid at the source.

6. DEFINITIONS.

A. Hazardous Quantity: An amount which could sustain a fire of sufficient severity and duration so as to result in a hazardous condition.

B. Hazardous Condition: Failure Conditions which would reduce the capability of the aeroplane or the ability of the crew to cope with adverse operating conditions to the extent that there would be:

(i) A large reduction in safety margins or functional capabilities;

(ii) Physical distress or higher workload such that the flight crew cannot be relied upon to perform their tasks accurately or completely; or

(iii) Serious or fatal injury to a relatively small number of the occupants;

(iv) For the purposes of this AMC, and specifically with respect to fire zone fires, any condition which could breach or exceed the fire zone integrity requirements or structural fireproofness requirements of CS-25.

C. Flammable Fluid. Flammable, with respect to a fluid or gas, means susceptible to igniting readily or to exploding. For the purpose of this AMC igniting readily includes ignition and burning when introduced into an existing flame, and includes fluids such as fuels, hydraulic fluid (including phosphate ester based fluids), oils, and deicing fluids.

7. COMPLIANCE METHODOLOGY:

The quantity of flammable fluid which is hazardous may vary with fire zone size and design, fluid characteristics, different fire scenarios, and other factors. Since one of these factors is the presence or absence of flammable fluid shut-off means, the requirements of CS 25.1189(a) and CS 25.1189(e) are discussed separately below.

7.1 Shut-off Means Requirements (CS 25.1189(a))

Compliance with CS 25.1189(a) has been typically been shown by installation of shut-off means for flammable fluids that could contribute to the hazards associated with an engine fire, except for lines fittings, and components forming an integral part of an engine and/or fireproof oil system components, which are not required to have a shut-off means per CS 25.1189(a)(1) and (a)(2). Flammable fluids that have been considered include fuel supplied to the engine/APU, fuel that may enter the fire zone from engine recirculation systems and hydraulic fluids entering the fire zone. Oil that may be supplied from outside the fire zone, deicing fluid, and other fluids would require similar consideration, however these are not typically incorporated in modern CS-25 aircraft engine installations.

Although shut-off means are typically incorporated, CS 25.1189(a) allows the option of otherwise preventing flow of hazardous quantities of flammable fluids. A shut-off means is, therefore, not required if no possible scenario will result in the flow of hazardous quantities of flammable fluid. Factors to be considered in determination of whether this compliance means is acceptable include the following:

A. Considerations

1) Leakage rates and characteristics, including massive leakage caused by component failure or fire damage, and slow leakage, which may be a spray or mist if the source is under pressure, caused by failures such as cracks or pinholes.

2) The amount of fluid in the system that is subject to leakage.

3) Combining A.1), and A.2), the range of potential duration of leakage.

4) Scenarios in which the analysed system leakage is subject to ignition and is the initial fire source.

5) Scenarios in which the initial fire source is a different system, and fire damage to the analysed system can result in leakage which contributes to the magnitude or duration of the fire.

B. Compliance

Considering the above factors and service experience of oil systems without shut-off means, it is acceptable to not install a shut-off means for specific systems which contain flammable fluid if the following conditions are met:

1) All components of the analysed system within the fire zone are fireproof, and

2) The quantity of fluid which can flow into the fire zone is not greater than the fluid quantity of the engine or APU oil system for an engine or APU fire zone, and

3) Accomplishment of AFM Emergency Procedures will preclude continuation of a pressurized spray or mist.

The meeting of conditions (1)-(3) are considered acceptable in precluding a hazardous quantity of flammable fluids from flowing into, within or through any designated fire zone.

7.2 Drainage Following Shut-off Requirements (CS 25.1189(e))

Following shut-off, flammable fluid will be contained within the components and plumbing in the fire zone, and usually within plumbing between the firewall and shut-off means. This is due to other requirements which affect the location of the shut-off means and, therefore, the amount of fluid between the shut-off means and the firewall that may drain into the fire zone following shut-off. These include the requirement to protect the shut-off means from a fire zone fire (CS 25.1189(d)), a powerplant or engine mount structural failure (CS 25.1189(g)), and engine rotor failure (CS 25.903(d)(1)).

An analysis is required for each individual flammable fluid system to determine that the total amount is not hazardous. The analysis should consider the aircraft attitudes expected to be encountered during continued flight following shut-off, which may include emergency descent attitudes, but would not be expected to include climb attitudes steeper than those associated with one engine inoperative flight at V2. If the analysed system traverses more than one fire zone, each fire zone should be analysed separately for the maximum fluid volume which can drain into that fire zone. Credit should not be taken for fire extinguishing provisions. The following are alternate criteria for hazardous quantities of flammable fluid for this condition:

A) A volume not exceeding 0·95 litre (1 US quarts) is not hazardous, or

B) An amount shown not to be hazardous by analysis considering the factors listed in 7.1.A above.

Additional factors relevant to this condition following shut-off are reduction in pressurized spray or mist due to reduction or absence of system pressure, and the possibility of rapid leakage or drainage due to either an initial leak or fire damage of plumbing and components, such as aluminium components or non-metallic hoses, following the required fire resistance period. Hazard assessment of such rapid leakage and drainage may include airflow ventilation limitation of fire intensity, and fire duration limitation through fire zone drainage.

The analysis may consider that volume which is capable of being drained from the nacelle within a suitable period is not hazardous. The suitable period should be such that fluid leakage into the fire zone will not aggravate a fire beyond a fifteen minute period from its initiation. A five minute period may be suitable when considering fire resistant

components and plumbing for which leakage due to fire damage will not occur during the first five minute period and may not occur immediately thereafter.

[Amdt 25/1]

CS 25.1191 Firewalls

ED Decision 2003/2/RM

(a) Each engine, fuel-burning heater, other combustion equipment intended for operation in flight, and the combustion, turbine, and tailpipe sections of turbine engines, must be isolated from the rest of the aeroplane by firewalls, shrouds, or equivalent means.

(b) Each firewall and shroud must be –

(1) Fireproof;

(2) Constructed so that no hazardous quantity of air, fluid, or flame can pass from the compartment to other parts of the aeroplane;

(3) Constructed so that each opening is sealed with close fitting fireproof grommets, bushings, or firewall fittings; and

(4) Protected against corrosion.

CS 25.1193 Cowling and nacelle skin

ED Decision 2003/2/RM

(a) Each cowling must be constructed and supported so that it can resist any vibration, inertia, and air load to which it may be subjected in operation.

(b) Cowling must meet the drainage and ventilation requirements of CS 25.1187.

(c) On aeroplanes with a diaphragm isolating the engine power section from the engine accessory section, each part of the accessory section cowling subject to flame in case of fire in the engine power section of the powerplant must –

(1) Be fireproof; and

(2) Meet the requirements of CS 25.1191.

(d) Each part of the cowling subject to high temperatures due to its nearness to exhaust system parts or exhaust gas impingement must be fireproof.

(e) Each aeroplane must –

(1) Be designed and constructed so that no fire originating in any fire zone can enter, either through openings or by burning through external skin, any other zone or region where it would create additional hazards;

(2) Meet sub-paragraph (e)(1) of this paragraph with the landing gear retracted (if applicable); and

(3) Have fireproof skin in areas subject to flame if a fire starts in the engine power or accessory sections.

CS 25.1195 Fire-extinguisher systems

ED Decision 2003/2/RM

(a) Except for combustor, turbine, and tail pipe sections of turbine engine installations that contain lines or components carrying flammable fluids or gases for which it is shown that a fire originating in these sections can be controlled, there must be a fire extinguisher system serving each designated fire zone.

(b) The fire-extinguishing system, the quantity of the extinguishing agent, the rate of discharge, and the discharge distribution must be adequate to extinguish fires. It must be shown by either actual or simulated flight tests that under critical airflow conditions in flight the discharge of the extinguishing agent in each designated fire zone specified in sub-paragraph (a) of this paragraph will provide an agent concentration capable of extinguishing fires in that zone and of minimising the probability of re-ignition. An individual 'one-shot' system may be used for fuel burning heaters, and other combustion equipment. For each other designated fire zone, two discharges must be provided each of which produces adequate agent concentration. (See AMC 25.1195(b).)

(c) The fire-extinguishing system for a nacelle must be able to simultaneously protect each zone of the nacelle for which protection is provided.

AMC 25.1195(b) Fire extinguisher systems

ED Decision 2003/2/RM

Acceptable methods to establish the adequacy of the fire extinguisher system are laid down in Advisory Circular 20-100.

CS 25.1197 Fire-extinguishing agents

ED Decision 2003/2/RM

(a) Fire-extinguishing agents must –

(1) Be capable of extinguishing flames emanating from any burning of fluids or other combustible materials in the area protected by the fire extinguishing system; and

(2) Have thermal stability over the temperature range likely to be experienced in the compartment in which they are stored.

(b) If any toxic extinguishing agent is used, provisions must be made to prevent harmful concentrations of fluid or fluid vapours (from leakage during normal operation of the aeroplane or as a result of discharging the fire extinguisher on the ground or in flight) from entering any personnel compartment, even though a defect may exist in the extinguishing system. This must be shown by test except for built-in carbon dioxide fuselage compartment fire extinguishing systems for which –

(1) 2.3 kg (five pounds) or less of carbon dioxide will be discharged, under established fire control procedures, into any fuselage compartment; or

(2) There is protective breathing equipment for each flight-crew member on flight deck duty.

CS 25.1199 Extinguishing agent containers

ED Decision 2003/2/RM

(a) Each extinguishing agent container must have a pressure relief to prevent bursting of the container by excessive internal pressures.

(b) The discharge end of each discharge line from a pressure relief connection must be located so that discharge of the fire extinguishing agent would not damage the aeroplane. The line must also be located or protected to prevent clogging caused by ice or other foreign matter.

(c) There must be a means for each fire extinguishing agent container to indicate that the container has discharged or that the charging pressure is below the established minimum necessary for proper functioning.

(d) The temperature of each container must be maintained, under intended operating conditions, to prevent the pressure in the container from –

(1) Falling below that necessary to provide an adequate rate of discharge; or

(2) Rising high enough to cause premature discharge.

(e) If a pyrotechnic capsule is used to discharge the extinguishing agent, each container must be installed so that temperature conditions will not cause hazardous deterioration of the pyrotechnic capsule.

CS 25.1201 Fire extinguishing system materials

ED Decision 2003/2/RM

(a) No material in any fire extinguishing system may react chemically with any extinguishing agent so as to create a hazard.

(b) Each system component in an engine compartment must be fireproof.

CS 25.1203 Fire-detector system

ED Decision 2003/2/RM

(a) There must be approved, quick acting fire or overheat detectors in each designated fire zone, and in the combustion, turbine, and tailpipe sections of turbine engine installations, in numbers and locations ensuring prompt detection of fire in those zones.

(b) Each fire detector system must be constructed and installed so that –

(1) It will withstand the vibration, inertia, and other loads to which it may be subjected in operation;

(2) There is a means to warn the crew in the event that the sensor or associated wiring within a designated fire zone is severed at one point, unless the system continues to function as a satisfactory detection system after the severing; and

(3) There is a means to warn the crew in the event of a short circuit in the sensor or associated wiring within a designated fire zone, unless the system continues to function as a satisfactory detection system after the short circuit.

(c) No fire or overheat detector may be affected by any oil, water, other fluids, or fumes that might be present.

(d) There must be means to allow the crew to check, in flight, the functioning of each fire or overheat detector electric circuit.

(e) Wiring and other components of each fire or overheat detector system in a fire zone must be at least fire-resistant.

(f) No fire or overheat detector system component for any fire zone may pass through another fire zone, unless –

(1) It is protected against the possibility of false warnings resulting from fires in zones through which it passes; or

(2) Each zone involved is simultaneously protected by the same detector and extinguishing system.

(g) Each fire detector system must be constructed so that when it is in the configuration for installation it will not exceed the alarm activation time approved for the detectors using the response time criteria specified in the appropriate European Technical Standard Order for the detector.

CS 25.1207 Compliance

ED Decision 2003/2/RM

Unless otherwise specified, compliance with the requirements of CS 25.1181 to 25.1203 must be shown by a full scale fire test or by one or more of the following methods:

(a) Tests of similar powerplant configurations;

(b) Tests of components;

(c) Service experience of aeroplanes with similar powerplant configurations;

(d) Analysis.

SUBPART F – EQUIPMENT

GENERAL

CS 25.1301 Function and installation

ED Decision 2006/005/R

Each item of installed equipment must –

(a) Be of a kind and design appropriate to its intended function;

(b) Be labelled as to its identification, function, or operating limitations, or any applicable combination of these factors. (See AMC 25.1301(b).)

(c) Be installed according to limitations specified for that equipment.

[Amdt 25/2]

AMC 25.1301(b) Function and installation

ED Decision 2003/2/RM

1 Adequate means of identification should be provided for all cables, connectors and terminals. The means employed should be such as to ensure that the identification does not deteriorate under service conditions.

2 When pipelines are marked for the purpose of distinguishing their functions, the markings should be such that the risk of confusion by maintenance or servicing personnel will be minimised. Distinction by means of colour markings alone is not acceptable. The use of alphabetic or numerical symbols will be acceptable if recognition depends upon reference to a master key and any relation between symbol and function is carefully avoided. Specification ISO.12 version 2ED 1987 gives acceptable graphical markings.

CS 25.1303 Flight and navigation instruments

ED Decision 2003/2/RM

(a) The following flight and navigation instruments must be installed so that the instrument is visible from each pilot station:

(1) A free-air temperature indicator or an air-temperature indicator which provides indications that are convertible to free-air temperature.

(2) A clock displaying hours, minutes, and seconds with a sweep-second pointer or digital presentation.

(3) A direction indicator (non-stabilised magnetic compass).

(b) The following flight and navigation instruments must be installed at each pilot station:

(1) An airspeed indicator. If airspeed limitations vary with altitude, the indicator must have a maximum allowable airspeed indicator showing the variation of V_{MO} with altitude.

(2) An altimeter (sensitive).

(3) A rate-of-climb indicator (vertical speed).

(4) A gyroscopic rate of turn indicator combined with an integral slip-skid indicator (turn-and-bank indicator) except that only a slipskid indicator is required on aeroplanes with a

third attitude instrument system usable through flight attitudes of 360° of pitch and roll, which is powered from a source independent of the electrical generating system and continues reliable operation for a minimum of 30 minutes after total failure of the electrical generating system, and is installed in accordance with CS 25.1321(a).

(5) A bank and pitch indicator (gyroscopically stabilised). (See AMC 25.1303(b)(5).)

(6) A direction indicator (gyroscopically stabilised, magnetic or non-magnetic).

(c) The following flight and navigation instruments are required as prescribed in this paragraph:

(1) A speed warning device which must give effective aural warning (differing distinctively from aural warnings used for other purposes) to the pilots whenever the speed exceeds V_{MO} plus 11.1 km/h (6 knots) or M_{MO} + 0·01. The upper limit of the production tolerance for the warning device may not exceed the prescribed warning speed. (See AMC 25.1303(c)(1).)

(2) A mach meter is required at each pilot station for aeroplanes with compressibility limitations not otherwise indicated to the pilot by the airspeed indicating system required under sub-paragraph (b)(1) of this paragraph.

AMC 25.1303(b)(5) Attitude Displays

ED Decision 2003/2/RM

1 *Attitude Displays*

1.1 For turbo-jet aeroplanes each display should be usable over the full range of 360° in pitch and in roll. For propeller-driven aeroplanes the pitch range may be reduced to ± 75° provided that no misleading indication is given when the limiting attitude is exceeded.

1.2 Paragraph 1.1 is not intended to prohibit the use of vertical references having controlled gyro precession, or its equivalent in the case of a stable platform, but precession should not occur at a pitch attitude closer to the horizontal than 70°, and should be completed within an attitude change of 15°.

1.3 The display should take the form of an artificial horizon line, which moves relative to a fixed reference aeroplane symbol so as to indicate the position of the true horizon.

NOTES:

1 It is acceptable for the fixed reference aeroplane symbol to be positioned so that it is aligned with the horizon line during cruising flight.

2 If a variable index is provided in addition to the fixed aeroplane symbol it should be so designed that it will not introduce any risk of misinterpretation of the display.

1.4 There should be no means accessible to the flight crew of adjusting the relationship between the horizon line and the reference aeroplane symbol.

1.5 The artificial horizon line should move in roll so as to remain parallel to the true horizon, i.e. when the aeroplane rolls through an angle of 30° the artificial horizon line should also rotate through 30° relative to the fixed index.

1.6 The artificial horizon line should remain in view over a range of pitch attitudes sufficient to cover all normal operation of the aeroplane plus a margin of not less than 2° in either direction. Additional 'ghost' horizon lines should be provided parallel to the main horizon line so that beyond this range at least one such line is in view at an attitude with the range of the display.

1.7 The pitch attitude scale should be sensibly linear while the main horizontal line is in view, but may become non-linear beyond this range.

All the attitude displays in the aeroplane should have a similar presentation so as to prevent any risk of confusion in transferring attention from one display to another.

1.9 Sufficient pitch and bank angle graduations and markings should be provided to allow an acceptably accurate reading of attitude and to minimise the possibility of confusion at extreme attitudes.

1.10 A bank angle index and scale should be provided. The index may be on the fixed or moving part of the display.

1.11 The 'earth' and 'sky' areas of the display should be of contrasting colours or shades. The distinction should not be lost at any pitch or roll angle.

1.12 Any additional information (e.g. flight director commands) displayed on an attitude display should not obscure or significantly degrade the attitude information.

1.13 The display should be clearly visible under all conditions of daylight and artificial lighting.

1.14 Words that may be ambiguous (e.g. 'climb', 'dive', 'push', 'pull') should not be used.

2 *Attitude Display Systems* (Acceptable Means of Compliance)

2.1 The probability of indication of dangerously incorrect information without a warning being given should be Extremely Remote.

2.2 The warning may be provided by means of self- or comparison-monitoring and should be clear and unambiguous, e.g. a flashing light. Instrument flags are unlikely to be acceptable as a comparator warning unless they exclude a significant portion of the display in which case means should be provided to permit the removal of the flag from the display, which is not in error.

2.3 The definition of dangerously incorrect information depends to some extent on the characteristics of the aeroplane, but in general an error greater than 5° in pitch or 10° in roll will be considered to be dangerous.

AMC 25.1303(c)(1) Flight and navigation instruments

ED Decision 2003/2/RM

In the absence of warning through the inherent aerodynamic qualities of the aeroplane (e.g. buffeting) it should be shown that no single faults can result both in misleading airspeed information and in operation of the warning system outside its tolerances, such as would be likely to lead to exceedance of V_{MO}/M_{MO}.

CS 25.1305 Powerplant instruments

ED Decision 2003/2/RM

The following are required powerplant instruments:

(a) *For all aeroplanes*

(1) A fuel pressure warning means for each engine, or a master warning means for all engines with provision for isolating the individual warning means from the master warning means.

(2) A fuel quantity indicator for each fuel tank.

(3) An oil quantity indicator for each oil tank.

(4) An oil pressure indicator for each independent pressure oil system of each engine.

(5) An oil pressure warning means for each engine, or a master warning means for all engines with provision for isolating the individual warning means from the master warning means.

(6) An oil temperature indicator for each engine.

(7) Fire-warning devices that provide visual and audible warning.

(8) An augmentation liquid quantity indicator (appropriate for the manner in which the liquid is to be used in operation) for each tank.

(b) Reserved.

(c) For turbine engine-powered aeroplanes. In addition to the powerplant instruments required by sub-paragraph (a) of this paragraph, the following powerplant instruments are required:

(1) A gas temperature indicator for each engine.

(2) A fuel flow meter indicator for each engine.

(3) A tachometer (to indicate the speed of the rotors with established limiting speeds) for each engine.

(4) A means to indicate, to the flight crew, the operation of each engine starter that can be operated continuously but that is neither designed for continuous operation nor designed to prevent hazard if it failed.

(5) An indicator to indicate the functioning of the powerplant ice protection system for each engine.

(6) An indicator for the fuel strainer or filter required by CS 25.997 to indicate the occurrence of contamination of the strainer or filter before it reaches the capacity established in accordance with CS 25.997(d).

(7) A warning means for the oil strainer or filter required by CS 25.1019, if it has no bypass, to warn the pilot of the occurrence of contamination of the strainer or filter screen before it reaches the capacity established in accordance with CS 25.1019(a)(2).

(8) An indicator to indicate the proper functioning of any heater used to prevent ice clogging of fuel system components.

(d) *For turbo-jet engine-powered aeroplanes.* In addition to the powerplant instruments required by sub-paragraphs (a) and (c) of this paragraph, the following powerplant instruments are required:

(1) An indicator to indicate thrust, or a parameter that is directly related to thrust, to the pilot. The indication must be based on the direct measurement of thrust or of the parameters that are directly related to thrust. The indicator must indicate a change in thrust resulting from any engine malfunction, damage or deterioration. (See AMC 25.1305(d)(1).)

(2) A position indicating means to indicate to the flight crew when the thrust reversing device –

(i) Is not in the selected position, and

(ii) Is in the reverse thrust position, for each engine using a thrust-reversing device.

(3) An indicator to indicate rotor system unbalance.

(e) *For turbo-propeller-powered aeroplanes*. In addition to the powerplant instruments required by sub-paragraphs (a) and (c) of this paragraph, the following powerplant instruments are required:

(1) A torque indicator for each engine.

(2) Position indicating means to indicate to the flight crew when the propeller blade angle is below the flight low pitch position, for each propeller.

(3) Reserved

(f) For aeroplanes equipped with fluid systems (other than fuel) for thrust or power augmentation, an approved means must be provided to indicate the proper functioning of that system to the flight crew.

AMC 25.1305(d)(1) Powerplant instruments

ED Decision 2003/2/RM

The following are examples of parameters, which are considered to be directly related to thrust; fan RPM(N_1), integrated engine pressure ratio (IEPR) and engine pressure ratio (EPR), depending on engine type.

CS 25.1307 Miscellaneous equipment

ED Decision 2003/2/RM

The following is required miscellaneous equipment:

(a) Reserved

(b) Two or more independent sources of electrical energy.

(c) Electrical protective devices, as prescribed in this CS-25.

(d) Two systems for two-way radio communications, with controls for each accessible from each pilot station, designed and installed so that failure of one system will not preclude operation of the other system. The use of a common antenna system is acceptable if adequate reliability is shown.

(e) Two systems for radio navigation, with controls for each accessible from each pilot station, designed and installed so that failure of one system will not preclude operation of the other system. The use of a common antenna system is acceptable if adequate reliability is shown.

CS 25.1309 Equipment, systems and installations

ED Decision 2003/2/RM

The requirements of this paragraph, except as identified below, are applicable, in addition to specific design requirements of CS-25, to any equipment or system as installed in the aeroplane. Although this paragraph does not apply to the performance and flight characteristic requirements of Subpart B and the structural requirements of Subparts C and D, it does apply to any system on which compliance with any of those requirements is dependent. Certain single failures or jams covered by CS 25.671(c)(d) and CS 25.671(c)(3) are excepted from the requirements of CS 25.1309(b)(1)(ii). Certain single failures covered by CS 25.735(b) are excepted from the requirements of CS 25.1309(b). The failure effects covered by CS 25.810(a)(1)(v) and CS 25.812 are excepted from the requirements

of CS 25.1309(b). The requirements of CS 25.1309(b) apply to powerplant installations as specified in CS 25.901(c).

(a) The aeroplane equipment and systems must be designed and installed so that:

(1) Those required for type certification or by operating rules, or whose improper functioning would reduce safety, perform as intended under the aeroplane operating and environmental conditions.

(2) Other equipment and systems are not a source of danger in themselves and do not adversely affect the proper functioning of those covered by sub-paragraph (a)(1) of this paragraph.

(b) The aeroplane systems and associated components, considered separately and in relation to other systems, must be designed so that -

(1) Any catastrophic failure condition

(i) is extremely improbable; and

(ii) does not result from a single failure; and

(2) Any hazardous failure condition is extremely remote; and

(3) Any major failure condition is remote.

(c) Information concerning unsafe system operating conditions must be provided to the crew to enable them to take appropriate corrective action. A warning indication must be provided if immediate corrective action is required. Systems and controls, including indications and annunciations must be designed to minimise crew errors, which could create additional hazards.

AMC 25.1309 System Design and Analysis

ED Decision 2006/005/R

1. ***PURPOSE.***

a. This AMC describes acceptable means for showing compliance with the requirements of CS 25.1309. These means are intended to provide guidance to supplement the engineering and operational judgement that must form the basis of any compliance demonstration.

b. The extent to which the more structured methods and guidelines contained in this AMC should be applied is a function of systems complexity and systems failure consequence. In general, the extent and structure of the analyses required to show compliance with CS 25.1309 will be greater when the system is more complex and the effects of the Failure Conditions are more severe. This AMC is not intended to require that the more structured techniques introduced in this revision be applied where traditional techniques have been shown to be acceptable for more traditional systems designs. The means described in this AMC are not mandatory. Other means may be used if they show compliance with CS 25.1309.

2. ***RESERVED.***

3. ***RELATED DOCUMENTS.***

The following guidance and advisory materials are referenced herein:

a. *Advisory Circulars, Acceptable Means of Compliance.*

(1) AMC 25.1322 Alerting Systems.

(2) AC 25.19/AMC 25.19 Certification Maintenance Requirements.

(3) AMC 20-115() Recognition of EUROCAE ED-12()/RTCA DO-178().

(4) AMC 25.901 (c) Safety Assessment of Powerplant Installations.

b. *Industry documents.*

(1) RTCA, Inc., Document No. DO-160D/EUROCAE ED-14D, Environmental Conditions and Test Procedures for Airborne Equipment.

(2) RTCA, Inc., Document No. DO-178()/EUROCAE ED-12(), Software Considerations in Airborne Systems and Equipment Certification, as recognized by AMC 20-115().

(3) Society of Automotive Engineers (SAE) Aerospace Recommended Practice (ARP) 4754/EUROCAE ED-79, Certification Considerations for Highly Integrated or Complex Aircraft Systems.

(4) Society of Automotive Engineers (SAE) Aerospace Recommended Practice (ARP) 4761, Guidelines and Methods for Conducting the Safety Assessment Process on Civil Airborne Systems and Equipment.

4. ***APPLICABILITY OF CS 25.1309.***

Paragraph 25.1309 is intended as a general requirement that should be applied to any equipment or system as installed, in addition to specific systems requirements, except as indicated below.

a. While CS 25.1309 does not apply to the performance and flight characteristics of Subpart B and structural requirements of Subparts C and D, it does apply to any system on which compliance with any of those requirements is based. For example, it does not apply to an aeroplane's inherent stall characteristics or their evaluation, but it does apply to a stall warning system used to enable compliance with CS 25.207.

b. Certain single failures or jams covered by CS 25.671(c)(1) and CS 25.671(c)(3) are accepted from the requirements of CS 25.1309(b)(1)(ii). FAR 25.671(c)(1) requires the consideration of single failures, regardless of the probability of the failure. CS 25.671(c)(1) does not consider the effects of single failures if their probability is shown to be extremely improbable and the failures also meet the requirements of CS 25.571(a) and (b).

c. Certain single failures covered by CS 25.735(b)(1) are accepted from the requirements of CS 25.1309(b). The reason concerns the brake system requirement that limits the effect of a single failure to doubling the brake roll stopping distance. This requirement has been shown to provide a satisfactory level of safety without the need to analyse the particular circumstances and conditions under which the single failure occurs.

d. The failure effects covered by CS 25.810(a)(1)(v) and CS 25.812 are accepted from the requirements of CS 25.1309(b). The Failure Conditions associated with these cabin safety equipment installations are associated with varied evacuation scenarios for which the probability cannot be determined. It has not been proven possible to define appropriate scenarios under which compliance with CS 25.1309(b) can be demonstrated. It is therefore considered more practical to require particular design features or specific reliability demonstrations and except these items of equipment from the requirements of CS 25.1309(b). Traditionally, this approach has been found to be acceptable.

e. The requirements of CS 25.1309 are generally applicable to engine, propeller, and propulsion system installations. The specific applicability and exceptions are stated in CS 25.901(c).

f. Some systems and some functions already receive an evaluation to show compliance with specific requirements for specific Failure Conditions and therefore meet the intent of CS 25.1309 without the need for additional analysis for those specific Failure Conditions.

5. **DEFINITIONS.**

The following definitions apply to the system design and analysis requirements of CS 25.1309 and the guidance material provided in this AMC. They should not be assumed to apply to the same or similar terms used in other regulations or AMCs. Terms for which standard dictionary definitions apply are not defined herein.

a. *Analysis.* The terms "analysis" and "assessment" are used throughout. Each has a broad definition and the two terms are to some extent interchangeable. However, the term analysis generally implies a more specific, more detailed evaluation, while the term assessment may be a more general or broader evaluation but may include one or more types of analysis. In practice, the meaning comes from the specific application, e.g., fault tree analysis, Markov analysis, Preliminary System Safety Assessment, etc.

b. *Assessment.* See the definition of analysis above.

c. *Average Probability Per Flight Hour.* For the purpose of this AMC, is a representation of the number of times the subject Failure Condition is predicted to occur during the entire operating life of all aeroplanes of the type divided by the anticipated total operating hours of all aeroplanes of that type (Note: The Average Probability Per Flight Hour is normally calculated as the probability of a Failure Condition occurring during a typical flight of mean duration divided by that mean duration).

d. *Candidate Certification Maintenance Requirements (CCMR).* A periodic maintenance or flight crew check may be used in a safety analysis to help demonstrate compliance with CS 25.1309(b) for Hazardous and Catastrophic Failure Conditions. Where such checks cannot be accepted as basic servicing or airmanship they become Candidate Certification Maintenance Requirements (CCMRs). AMC 25.19 defines a method by which Certification Maintenance Requirements (CMRs) are identified from the candidates. A CMR becomes a required periodic maintenance check identified as an operating limitation of the type certificate for the aeroplane.

e. *Check.* An examination (e.g., an inspection or test) to determine the physical integrity and/or functional capability of an item.

f. *Complex.* A system is Complex when its operation, failure modes, or failure effects are difficult to comprehend without the aid of analytical methods.

g. *Conventional.* A system is considered to be Conventional if its functionality, the technological means used to implement its functionality, and its intended usage are all the same as, or closely similar to, that of previously approved systems that are commonly-used.

h. *Design Appraisal.* This is a qualitative appraisal of the integrity and safety of the system design.

i. *Development Assurance.* All those planned and systematic actions used to substantiate, to an adequate level of confidence, that errors in requirements, design, and

implementation have been identified and corrected such that the system satisfies the applicable certification basis.

j. *Error.* An omission or incorrect action by a crewmember or maintenance personnel, or a mistake in requirements, design, or implementation.

k. *Event.* An occurrence which has its origin distinct from the aeroplane, such as atmospheric conditions (e.g. gusts, temperature variations, icing and lightning strikes), runway conditions, conditions of communication, navigation, and surveillance services, bird-strike, cabin and baggage fires. The term is not intended to cover sabotage.

l. *Failure.* An occurrence, which affects the operation of a component, part, or element such that it can no longer function as intended, (this includes both loss of function and malfunction). Note: Errors may cause Failures, but are not considered to be Failures.

m. *Failure Condition.* A condition having an effect on the aeroplane and/or its occupants, either direct or consequential, which is caused or contributed to by one or more failures or errors, considering flight phase and relevant adverse operational or environmental conditions, or external events.

n. *Installation Appraisal.* This is a qualitative appraisal of the integrity and safety of the installation. Any deviations from normal, industry-accepted installation practices, such as clearances or tolerances, should be evaluated, especially when appraising modifications made after entry into service.

o. *Latent Failure.* A failure is latent until it is made known to the flight crew or maintenance personnel. A significant latent failure is one, which would in combination with one or more specific failures, or events result in a Hazardous or Catastrophic Failure Condition.

p. *Qualitative.* Those analytical processes that assess system and aeroplane safety in an objective, nonnumerical manner.

q. *Quantitative.* Those analytical processes that apply mathematical methods to assess system and aeroplane safety.

r. *Redundancy.* The presence of more than one independent means for accomplishing a given function or flight operation.

s. *System*. A combination of components, parts, and elements, which are inter-connected to perform one or more functions.

6. ***BACKGROUND***

a. *General*.

For a number of years aeroplane systems were evaluated to specific requirements, to the "single fault" criterion, or to the fail-safe design concept. As later-generation aeroplanes developed, more safety-critical functions were required to be performed, which generally resulted in an increase in the complexity of the systems designed to perform these functions. The potential hazards to the aeroplane and its occupants which could arise in the event of loss of one or more functions provided by a system or that system's malfunction had to be considered, as also did the interaction between systems performing different functions. This has led to the general principle that an inverse relationship should exist between the probability of a Failure Condition and its effect on the aeroplane and/or its occupants (see Figure 1). In assessing the acceptability of a design it was recognised that rational probability values would have to be established. Historical evidence indicated that the probability of a serious accident due to operational

and airframe-related causes was approximately one per million hours of flight. Furthermore, about 10 percent of the total were attributed to Failure Conditions caused by the aeroplane's systems. It seems reasonable that serious accidents caused by systems should not be allowed a higher probability than this in new aeroplane designs. It is reasonable to expect that the probability of a serious accident from all such Failure Conditions be not greater than one per ten million flight hours or 1×10^{-7} per flight hour for a newly designed aeroplane. The difficulty with this is that it is not possible to say whether the target has been met until all the systems on the aeroplane are collectively analysed numerically. For this reason it was assumed, arbitrarily, that there are about one hundred potential Failure Conditions in an aeroplane, which could be Catastrophic. The target allowable Average Probability per Flight Hour of 1×10^{-7} was thus apportioned equally among these Failure Conditions, resulting in an allocation of not greater than 1×10^{-9} to each. The upper limit for the Average Probability per Flight Hour for Catastrophic Failure Conditions would be 1×10^{-9}, which establishes an approximate probability value for the term "Extremely Improbable". Failure Conditions having less severe effects could be relatively more likely to occur.

b. *Fail-Safe Design Concept.*

The Part 25 airworthiness standards are based on, and incorporate, the objectives and principles or techniques of the fail-safe design concept, which considers the effects of failures and combinations of failures in defining a safe design.

(1) The following basic objectives pertaining to failures apply:

(i) In any system or subsystem, the failure of any single element, component, or connection during any one flight should be assumed, regardless of its probability. Such single failures should not be Catastrophic.

(ii) Subsequent failures during the same flight, whether detected or latent, and combinations thereof, should also be assumed, unless their joint probability with the first failure is shown to be extremely improbable.

(2) The fail-safe design concept uses the following design principles or techniques in order to ensure a safe design. The use of only one of these principles or techniques is seldom adequate. A combination of two or more is usually needed to provide a fail-safe design; i.e. to ensure that Major Failure Conditions are Remote, Hazardous Failure Conditions are Extremely Remote, and Catastrophic Failure Conditions are Extremely Improbable:

(i) *Designed Integrity and Quality,* including *Life Limits*, to ensure intended function and prevent failures.

(ii) *Redundancy* or *Backup Systems* to enable continued function after any single (or other defined number of) failure(s); e.g., two or more engines, hydraulic systems, flight control systems, etc.

(iii) *Isolation and/or Segregation of Systems, Components, and Elements* so that the failure of one does not cause the failure of another.

(iv) *Proven Reliability* so that multiple, independent failures are unlikely to occur during the same flight.

(v) *Failure Warning or Indication* to provide detection.

(vi) *Flight crew Procedures* specifying corrective action for use after failure detection.

(vii) *Checkability:* the capability to check a component's condition.

(viii) *Designed Failure Effect Limits*, including the capability to sustain damage, to limit the safety impact or effects of a failure.

(ix) *Designed Failure Path* to control and direct the effects of a failure in a way that limits its safety impact.

(x) *Margins or Factors of Safety* to allow for any undefined or unforeseeable adverse conditions.

(xi) *Error-Tolerance* that considers adverse effects of foreseeable errors during the aeroplane's design, test, manufacture, operation, and maintenance.

c. *Highly Integrated Systems.*

(1) A concern arose regarding the efficiency and coverage of the techniques used for assessing safety aspects of highly integrated systems that perform complex and interrelated functions, particularly through the use of electronic technology and software based techniques. The concern is that design and analysis techniques traditionally applied to deterministic risks or to conventional, non-complex systems may not provide adequate safety coverage for more complex systems. Thus, other assurance techniques, such as development assurance utilising a combination of process assurance and verification coverage criteria, or structured analysis or assessment techniques applied at the aeroplane level, if necessary, or at least across integrated or interacting systems, have been applied to these more complex systems. Their systematic use increases confidence that errors in requirements or design, and integration or interaction effects have been adequately identified and corrected.

(2) Considering the above developments, as well as revisions made to the CS 25.1309, this AMC was revised to include new approaches, both qualitative and quantitative, which may be used to assist in determining safety requirements and establishing compliance with these requirements, and to reflect revisions in the rule, considering the whole aeroplane and its systems. It also provides guidance for determining when, or if, particular analyses or development assurance actions should be conducted in the frame of the development and safety assessment processes. Numerical values are assigned to the probabilistic terms included in the requirements for use in those cases where the impact of system failures is examined by quantitative methods of analysis. The analytical tools used in determining numerical values are intended to supplement, but not replace, qualitative methods based on engineering and operational judgement.

7. FAILURE CONDITION CLASSIFICATIONS AND PROBABILITY TERMS

a. *Classifications.* Failure Conditions may be classified according to the severity of their effects as follows:

(1) *No Safety Effect:* Failure Conditions that would have no effect on safety; for example, Failure Conditions that would not affect the operational capability of the aeroplane or increase crew workload.

(2) *Minor:* Failure Conditions which would not significantly reduce aeroplane safety, and which involve crew actions that are well within their capabilities. Minor Failure Conditions may include, for example, a slight reduction in safety margins or functional capabilities, a slight

increase in crew workload, such as routine flight plan changes, or some physical discomfort to passengers or cabin crew.

(3) *Major:* Failure Conditions which would reduce the capability of the aeroplane or the ability of the crew to cope with adverse operating conditions to the extent that there would be, for example, a significant reduction in safety margins or functional capabilities, a significant increase in crew workload or in conditions impairing crew efficiency, or discomfort to the flight crew, or physical distress to passengers or cabin crew, possibly including injuries.

(4) *Hazardous:* Failure Conditions, which would reduce the capability of the aeroplane or the ability of the crew to cope with adverse operating, conditions to the extent that there would be:

(i) A large reduction in safety margins or functional capabilities;

(ii) Physical distress or excessive workload such that the flight crew cannot be relied upon to perform their tasks accurately or completely; or

(iii) Serious or fatal injury to a relatively small number of the occupants other than the flight crew.

(5) *Catastrophic:* Failure Conditions, which would result in multiple fatalities, usually with the loss of the aeroplane. (Note: A "Catastrophic" Failure Condition was defined in previous versions of the rule and the advisory material as a Failure Condition which would prevent continued safe flight and landing.)

b. *Qualitative Probability Terms.*

When using qualitative analyses to determine compliance with CS 25.1309(b), the following descriptions of the probability terms used in CS 25.1309 and this AMC have become commonly accepted as aids to engineering judgement:

(1) Probable Failure Conditions are those anticipated to occur one or more times during the entire operational life of each aeroplane.

(2) Remote Failure Conditions are those unlikely to occur to each aeroplane during its total life, but which may occur several times when considering the total operational life of a number of aeroplanes of the type.

(3) Extremely Remote Failure Conditions are those not anticipated to occur to each aeroplane during its total life but which may occur a few times when considering the total operational life of all aeroplanes of the type.

(4) Extremely Improbable Failure Conditions are those so unlikely that they are not anticipated to occur during the entire operational life of all aeroplanes of one type.

c. *Quantitative Probability Terms*.

When using quantitative analyses to help determine compliance with CS 25.1309(b), the following descriptions of the probability terms used in

this requirement and this AMC have become commonly accepted as aids to engineering judgement. They are expressed in terms of acceptable ranges for the Average Probability Per Flight Hour.

(1) Probability Ranges.

(i) Probable Failure Conditions are those having an Average Probability Per Flight Hour greater than of the order of 1×10^{-5}.

(ii) Remote Failure Conditions are those having an Average Probability Per Flight Hour of the order of 1×10^{-5} or less, but greater than of the order of 1×10^{-7}.

(iii) Extremely Remote Failure Conditions are those having an Average Probability Per Flight Hour of the order of 1×10^{-7} or less, but greater than of the order of 1×10^{-9}.

(iv) Extremely Improbable Failure Conditions are those having an Average Probability Per Flight Hour of the order of 1×10^{-9} or less.

8. ***SAFETY OBJECTIVE.***

a. The objective of CS 25.1309 is to ensure an acceptable safety level for equipment and systems as installed on the aeroplane. A logical and acceptable inverse relationship must exist between the Average Probability per Flight Hour and the severity of Failure Condition effects, as shown in Figure 1, such that:

(1) Failure Conditions with No Safety Effect have no probability requirement.

(2) Minor Failure Conditions may be Probable.

(3) Major Failure Conditions must be no more frequent than Remote.

(4) Hazardous Failure Conditions must be no more frequent than Extremely Remote.

(5) Catastrophic Failure Conditions must be Extremely Improbable.

Figure 1: Relationship between Probability and Severity of Failure Condition Effects

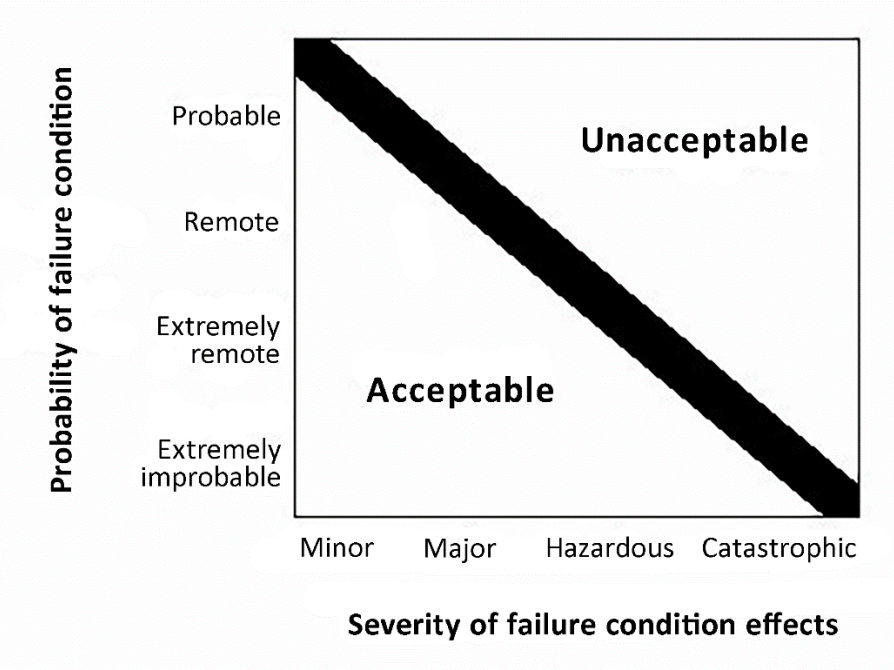

b. The safety objectives associated with Failure Conditions are described in Figure 2.

Figure 2: Relationship Between Probability and Severity of Failure Condition

Effect on Aeroplane	No effect on operational capabilities or safety	Slight reduction in functional capabilities or safety margins	Significant reduction in functional capabilities or safety margins	Large reduction in functional capabilities or safety margins	Normally with hull loss
Effect on Occupants excluding Flight Crew	Inconvenience	Physical discomfort	Physical distress, possibly including injuries	Serious or fatal injury to a small number of passengers or cabin crew	Multiple fatalities
Effect on Flight Crew	No effect on flight crew	Slight increase in workload	Physical discomfort or a significant increase in workload	Physical distress or excessive workload impairs ability to perform tasks	Fatalities or incapacitatio n
Allowable Qualitative Probability	No Probability Requirement	<---Probable--->	<----Remote--->	Extremely <----------> Remote	Extremely Improbable
Allowable Quantitative Probability: Average Probability per Flight Hour on the Order of:	No Probability Requirement	<----------> $<10^{-3}$ Note 1	<----------> $<10^{-5}$	<----------> $<10^{-7}$	<10-9

Classification of Failure Conditions	No Safety Effect	<-----Minor----->	<-----Major----->	<--Hazardous-->	Catastrophic
Note 1: A numerical probability range is provided here as a reference. The applicant is not required to perform a quantitative analysis, nor substantiate by such an analysis, that this numerical criteria has been met for Minor Failure Conditions. Current transport category aeroplane products are regarded as meeting this standard simply by using current commonly-accepted industry practice.					

c. The safety objectives associated with Catastrophic Failure Conditions, may be satisfied by demonstrating that:

(1) No single failure will result in a Catastrophic Failure Condition; and

(2) Each Catastrophic Failure Condition is Extremely Improbable.

d. Exceptionally, for paragraph 8c(2) above of this AMC, if it is not technologically or economically practicable to meet the numerical criteria for a Catastrophic Failure Condition, the safety objective may be met by accomplishing all of the following:

(1) Utilising well proven methods for the design and construction of the system; and

(2) Determining the Average Probability per Flight Hour of each Failure Condition using structured methods, such as Fault Tree Analysis, Markov Analysis, or Dependency Diagrams; and

(3) Demonstrating that the sum of the Average Probabilities per Flight Hour of all Catastrophic Failure Conditions caused by systems is of the order of 10^{-7} or less (See paragraph 6a for background).

9. COMPLIANCE WITH CS 25.1309.

This paragraph describes specific means of compliance for CS 25.1309. The applicant should obtain early concurrence of the certification authority on the choice of an acceptable means of compliance.

a. Compliance with CS 25.1309(a).

(1) Equipment covered by 25.1309(a)(1) must be shown to function properly when installed. The aeroplane operating and environmental conditions over which proper functioning of the equipment, systems, and installation is required to be considered includes the full normal operating envelope of the aeroplane as defined by the Aeroplane Flight Manual together with any modification to that envelope associated with abnormal or emergency procedures. Other external environmental conditions such as atmospheric turbulence, HIRF, lightning, and precipitation, which the aeroplane is reasonably expected to encounter, should also be considered. The severity of the external environmental conditions which should be considered are limited to those established by certification standards and precedence.

(2) In addition to the external operating and environmental conditions, the effect of the environment within the aeroplane should be considered. These effects should include vibration and acceleration loads, variations in fluid pressure and electrical power, fluid or vapour contamination, due either to the normal environment or accidental leaks or spillage and handling by personnel. Document referenced in paragraph 3b(1) defines a series of standard environmental test conditions and procedures, which may be used to support compliance. Equipment covered by (CS)

Technical Standard Orders containing environmental test procedures or equipment qualified to other environmental test standards can be used to support compliance. The conditions under which the installed equipment will be operated should be equal to or less severe than the environment for which the equipment is qualified.

(3) The required substantiation of the proper functioning of equipment, systems, and installations under the operating and environmental conditions approved for the aeroplane may be shown by test and/or analysis or reference to comparable service experience on other aeroplanes. It must be shown that the comparable service experience is valid for the proposed installation. For the equipment systems and installations covered by CS 25.1309(a)(1), the compliance demonstration should also confirm that the normal functioning of such equipment, systems, and installations does not interfere with the proper functioning of other equipment, systems, or installations covered by CS 25.1309(a)(1).

(4) The equipment, systems, and installations covered by CS 25.1309(a)(2) are typically those associated with amenities for passengers such as passenger entertainment systems, in-flight telephones, etc., whose failure or improper functioning in itself should not affect the safety of the aeroplane. Operational and environmental qualification requirements for those equipment, systems, and installations are reduced to the tests that are necessary to show that their normal or abnormal functioning does not adversely affect the proper functioning of the equipment, systems, or installations covered by CS 25.1309(a)(1) and does not otherwise adversely influence the safety of the aeroplane or its occupants. Examples of adverse influences are: fire, explosion, exposing passengers to high voltages, etc.

b. Compliance with CS 25.1309(b).

Paragraph 25.1309(b) requires that the aeroplane systems and associated components, considered separately and in relation to other systems must be designed so that any Catastrophic Failure Condition is Extremely Improbable and does not result from a single failure. It also requires that any Hazardous.

Failure Condition is extremely Remote, and that any Major Failure Condition is Remote. An analysis should always consider the application of the Fail-Safe design concept described in paragraph 6b, and give special attention to ensuring the effective use of design techniques that would prevent single failures or other events from damaging or otherwise adversely affecting more than one redundant system channel or more than one system performing operationally similar functions.

(1) *General*. Compliance with the requirements of CS 25.1309(b) should be shown by analysis and, where necessary, by appropriate ground, flight, or simulator tests. Failure Conditions should be identified and their effects assessed. The maximum allowable probability of the occurrence of each Failure Condition is determined from the Failure Condition's effects, and when assessing the probabilities of Failure Conditions appropriate analysis considerations should be accounted for. Any analysis must consider:

(i) Possible Failure Conditions and their causes, modes of failure, and damage from sources external to the system.

(ii) The possibility of multiple failures and undetected failures.

(iii) The possibility of requirement, design and implementation errors.

(iv) The effect of reasonably anticipated crew errors after the occurrence of a failure or Failure Condition.

(v) The effect of reasonably anticipated errors when performing maintenance actions.

(vi) The crew alerting cues, corrective action required, and the capability of detecting faults.

(vii) The resulting effects on the aeroplane and occupants, considering the stage of flight and operating and environmental conditions.

(2) *Planning.* This AMC provides guidance on methods of accomplishing the safety objective. The detailed methodology needed to achieve this safety objective will depend on many factors, in particular the degree of systems complexity and integration. For aeroplanes containing many complex or integrated systems, it is likely that a plan will need to be developed to describe the intended process. This plan should include consideration of the following aspects:

(i) Functional and physical interrelationships of systems.

(ii) Determination of detailed means of compliance, which may include the use of Development Assurance techniques.

(iii) Means for establishing the accomplishment of the plan.

(3) *Availability of Industry Standards and Guidance Materials*. There are a variety of acceptable techniques currently being used in industry, which may or may not be reflected in Documents referenced in paragraphs 3b(3) and 3b(4). This AMC is not intended to compel the use of these documents during the definition of the particular method of satisfying the objectives of this AMC. However, these documents do contain material and methods of performing the System Safety Assessment. These methods, when correctly applied, are recognised by the Agency as valid for showing compliance with CS 25.1309(b). In addition, Document referenced in paragraph 3b(4) contains tutorial information on applying specific engineering methods (e.g. Markov Analysis, Fault Tree Analysis) that may be utilised in whole or in part.

(4) *Acceptable Application of Development Assurance Methods*. Paragraph 9b(1)(iii) above requires that any analysis necessary to show compliance with CS 25.1309(b) must consider the possibility of requirement, design, and implementation errors. Errors made during the design and development of systems have traditionally been detected and corrected by exhaustive tests conducted on the system and its components, by direct inspection, and by other direct verification methods capable of completely characterising the performance of the system. These direct techniques may still be appropriate for simple systems which perform a limited number of functions and which are not highly integrated with other aeroplane systems. For more complex or integrated systems, exhaustive testing may either be impossible because all of the system states cannot be determined or impractical because of the number of tests which must be accomplished. For these types of systems, compliance may be shown by the use of Development Assurance. The level of Development Assurance should be determined by the severity of potential effects on the aeroplane in case of system malfunctions or loss of functions. Guidelines, which may be used for providing Development Assurance, are described for systems in Document referenced in paragraph 3b(3), and for

software in Documents referenced in paragraphs 3a(3) and 3b(2). (There is currently no agreed Development Assurance standard for hardware.) Because these documents were not developed simultaneously, there are differences in the guidelines and terminology that they contain. A significant difference is the guidance provided on the use of system architecture for determination of the appropriate development assurance level for hardware and software. EASA recognises that consideration of system architecture for this purpose is appropriate. Where apparent differences exist between these documents on this subject, the guidance contained in Appendix D of Document referenced in paragraph 3b(3) should be followed. If the criteria of Document referenced in paragraph 3b(3) are not satisfied by a particular development assurance process the development assurance levels may have to be increased using the guidance of Document referenced in paragraph 3b(2).

(5) *Crew and Maintenance Actions*.

(i) Where an analysis identifies some indication to, and/or action by, the flight crew, cabin crew, or maintenance personnel, the following activities should be accomplished:

1 Verify that any identified indications are actually provided by the system.

2 Verify that any identified indications will, in fact, be recognised.

3 Verify that any actions required have a reasonable expectation of being accomplished successfully and in a timely manner.

(ii) These verification activities should be accomplished by consulting with engineers, pilots, flight attendants, maintenance personnel and human factors specialists as appropriate, taking due consideration of the consequences if the assumed action is not performed or mis-performed.

(iii) In complex situations, the results of the review by specialists may need to be confirmed by simulator or flight tests. However, quantitative assessments of the probabilities of crew or maintenance errors are not currently considered feasible. If the failure indications are considered to be recognisable and the required actions do not cause an excessive workload, then for the purposes of the analysis, the probability that the corrective action will be accomplished, can be considered to be one. If the necessary actions cannot be satisfactorily accomplished, the tasks and/or the systems need to be modified.

c. Compliance with CS 25.1309(c).

CS 25.1309(c) requires that information concerning unsafe system operating conditions must be provided to the crew to enable them to take appropriate corrective action. Compliance with this requirement is usually demonstrated by the analysis identified in paragraph 9b(1) above, which also includes consideration of crew alerting cues, corrective action required, and the capability of detecting faults. CS 25.1309(c) requires that a warning indication must be provided if immediate corrective action is required. Paragraph 25.1309(c) also requires that systems and controls, including indications and annunciations, must be designed to minimise crew errors, which could create additional hazards.

(1) The required information will depend on the degree of urgency for recognition and corrective action by the crew. It should be in the form of:

(i) a warning, if immediate recognition and corrective or compensatory action by the crew is required;

(ii) a caution if immediate crew awareness is required and subsequent crew action will be required;

(iii) an advisory, if crew awareness is required and subsequent crew action may be required;

(iv) a message in the other cases.

CS 25.1322 (and AMC 25.1322) give further requirements (and guidance) on the characteristics of the information required (visual, aural) based on those different categories.

(2) When failure monitoring and indication are provided by a system, its reliability should be compatible with the safety objectives associated with the system function for which it provides that indication. For example, if the effects of having a failure and not annunciating that failure are Catastrophic, the combination of the failure with the failure of its annunciation must be Extremely Improbable. In addition, unwanted operation (e.g., nuisance warnings) should be assessed. The failure monitoring and indication should be reliable, technologically feasible and economically practicable. Reliable failure monitoring and indication should utilise current state of the art technology to maximise the probability of detecting and indicating genuine failures while minimising the probability of falsely detecting and indicating non-existent failures. Any indication should be timely, obvious, clear, and unambiguous.

(3) In the case of aeroplane conditions requiring immediate crew action, a suitable warning indication must be provided to the crew, if not provided by inherent aeroplane characteristics. In either case, any warning should be rousing and should occur at a point in a potentially catastrophic sequence where the aeroplane's capability and the crew's ability still remain sufficient for effective crew action.

(4) Unless they are accepted as normal airmanship, procedures for the crew to follow after the occurrence of failure warning should be described in the approved Aeroplane Flight Manual (AFM) or AFM revision or supplement.

(5) Even if operation or performance is unaffected or insignificantly affected at the time of failure, information to the crew is required if it is considered necessary for the crew to take any action or observe any precautions. Some examples include reconfiguring a system, being aware of a reduction in safety margins, changing the flight plan or regime, or making an unscheduled landing to reduce exposure to a more severe Failure Condition that would result from subsequent failures or operational or environmental conditions. Information is also required if a failure must be corrected before a subsequent flight. If operation or performance is unaffected or insignificantly affected, information and alerting indications may be inhibited during specific phases of flight where corrective action by the crew is considered more hazardous than no action.

(6) The use of periodic maintenance or flight crew checks to detect significant latent failures when they occur is undesirable and should not be used in lieu of practical and reliable failure monitoring and indications. Paragraph 12 provides further

guidance on the use of periodic maintenance or flight crew checks. Comparison with similar, previously approved systems is sometimes helpful.

(7) Particular attention should be given to the placement of switches or other control devices, relative to one another, so as to minimise the potential for inadvertent incorrect crew action, especially during emergencies or periods of high workload. Extra protection, such as the use of guarded switches, may sometimes be needed.

10. ***IDENTIFICATION OF FAILURE CONDITIONS AND CONSIDERATIONS WHEN ASSESSING THEIR EFFECTS.***

a. *Identification of Failure Conditions*.

Failure Conditions should be identified by considering the potential effects of failures on the aeroplane and occupants. These should be considered from two perspectives:

(1) by considering failures of aeroplane level functions - Failure Conditions identified at this level are not dependent on the way the functions are implemented and the systems' architecture.

(2) by considering failures of functions at the system level - these Failure Conditions are identified through examination of the way that functions are implemented and the systems' architectures.

It should be noted that a Failure Condition might result from a combination of lower level Failure Conditions. This requires that the analysis of complex, highly integrated systems, in particular, should be conducted in a highly methodical and structured manner to ensure that all significant Failure Conditions, which arise from multiple failures and combinations of lower level Failure Conditions, are properly identified and accounted for. The relevant combinations of failures and Failure Conditions should be determined by the whole safety assessment process that encompasses the aeroplane and system level functional hazard assessments and common cause analyses. The overall effect on the aeroplane of a combination of individual system Failure Conditions occurring as a result of a common or cascade failure, may be more severe than the individual system effect. For example, Failure Conditions classified as Minor or Major by themselves may have Hazardous effects at an aeroplane level, when considered in combination.

b. *Identification of Failure Conditions Using a Functional Hazard Assessment*.

(1) Before a detailed safety assessment is proceeded with, a Functional Hazard Assessment (FHA) of the aeroplane and system functions to determine the need for and scope of subsequent analysis should be prepared. This assessment may be conducted using service experience, engineering and operational judgement, and/or a top-down deductive qualitative examination of each function. A Functional Hazard Assessment is a systematic, comprehensive examination of aeroplane and system functions to identify potential Minor, Major, Hazardous, and Catastrophic Failure Conditions which may arise, not only as a result of malfunctions or failure to function, but also as a result of normal responses to unusual or abnormal external factors. It is concerned with the operational vulnerabilities of systems rather than with a detailed analysis of the actual implementation.

(2) Each system function should be examined with respect to the other functions performed by the system, because the loss or malfunction of all functions performed by the system may result in a more severe failure condition than the loss of a single function. In addition, each system function should be examined with

respect to functions performed by other aeroplane systems, because the loss or malfunction of different but related functions, provided by separate systems may affect the severity of Failure Conditions postulated for a particular system.

(3) The Functional Hazard Assessment is an engineering tool, which should be performed early in the design and updated as necessary. It is used to define the high-level aeroplane or system safety objectives that must be considered in the proposed system architectures. It should also be used to assist in determining the development assurance levels for the systems. Many systems may need only a simple review of the system design by the applicant to determine the hazard classification. A Functional Hazard Assessment requires experienced engineering judgement and early co-ordination between the applicant and the certification authority.

(4) Depending on the extent of functions to be examined and the relationship between functions and systems, different approaches to Functional Hazard Assessment may be taken. Where there is a clear correlation between functions and systems, and where system, and hence function, interrelationships are relatively simple, it may be feasible to conduct separate Functional Hazard Assessments for each system, providing any interface aspects are properly considered and are easily understood. However, where system and function interrelationships are more complex, a top down approach, from an aeroplane level perspective, should be taken in planning and conducting Functional Hazard Assessments.

c. *Considerations When Assessing Failure Condition Effects*.

The requirements of CS 25.1309(b) are intended to ensure an orderly and thorough evaluation of the effects on safety of foreseeable failures or other events, such as errors or external circumstances, separately or in combination, involving one or more system functions. The interactions of these factors within a system and among relevant systems should be considered. In assessing the effects of a Failure Condition, factors, which might alleviate or intensify the direct effects of the initial Failure Condition should be considered.

Some of these factors include consequent or related conditions existing within the aeroplane which may affect the ability of the crew to deal with direct effects, such as the presence of smoke, acceleration effects, interruption of communication, interference with cabin pressurisation, etc. When assessing the consequences of a given Failure Condition, account should be taken of the failure information provided, the complexity of the crew action, and the relevant crew training. The number of overall Failure Conditions involving other than instinctive crew actions may influence the flight crew performance that can be expected. Training recommendations may need to be identified in some cases.

(1) The severity of Failure Conditions should be evaluated according to the following:

(i) Effects on the aeroplane, such as reductions in safety margins, degradation in performance, loss of capability to conduct certain flight operations, reduction in environmental protection, or potential or consequential effects on structural integrity.

(ii) Effects on the crewmembers, such as increases above their normal workload that would affect their ability to cope with adverse operational or environmental conditions or subsequent failures.

(iii) Effects on the occupants, i.e., passengers and crewmembers.

(2) For convenience in conducting design assessments, Failure Conditions may be classified according to the severity of their effects as No Safety Effect, Minor, Major, Hazardous, or Catastrophic. Paragraph 7a above provides accepted definitions of these terms.

(I) The classification of Failure Conditions does not depend on whether or not a system or function is the subject of a specific requirement or regulation. Some "required" systems, such as transponders, position lights, and public address systems, may have the potential for only Minor Failure Conditions. Conversely, other systems which are not "required", such as auto flight systems, may have the potential for Major, Hazardous, or Catastrophic Failure Conditions.

(ii) Regardless of the types of assessment used, the classification of Failure Conditions should always be accomplished with consideration of all relevant factors; e.g., system, crew, performance, operational, external. Examples of factors include the nature of the failure modes, any effects or limitations on performance, and any required or likely crew action. It is particularly important to consider factors that would alleviate or intensify the severity of a Failure Condition. An example of an alleviating factor would be the continued performance of identical or operationally similar functions by other systems not affected by the Failure Condition. Examples of intensifying factors would include unrelated conditions that would reduce the ability of the crew to cope with a Failure Condition, such as weather or other adverse operational or environmental conditions.

11. ***ASSESSMENT OF FAILURE CONDITION PROBABILITIES AND ANALYSIS CONSIDERATIONS.***

After the Failure Conditions have been identified and the severity of the effects of the Failure Conditions have been assessed, there is a responsibility to determine how to show compliance with the requirement and obtain the concurrence of EASA. Design and installation reviews, analyses, flight tests, ground tests, simulator tests, or other approved means may be used.

a. *Assessment of Failure Condition Probabilities*.

(1) The probability that a Failure Condition would occur may be assessed as Probable, Remote, Extremely Remote, or Extremely Improbable. These terms are defined in paragraph 7. Each Failure Condition should have a probability that is inversely related to the severity of its effects as described in paragraph 8.

(2) When a system provides protection from events (e.g., cargo compartment fire, gusts), its reliability should be compatible with the safety objectives necessary for the Failure Condition associated with the failure of the protection system and the probability of such events. (See paragraph 11g of this AMC and Appendix 4.)

(3) An assessment to identify and classify Failure Conditions is necessarily qualitative. On the other hand, an assessment of the probability of a Failure Condition may be either qualitative or quantitative. An analysis may range from a simple report that interprets test results or compares two similar systems to a detailed analysis that may or may not include estimated numerical probabilities. The depth and scope of an analysis depends on the types of functions performed by the system, the severity of Failure Conditions, and whether or not the system is complex.

(4) Experienced engineering and operational judgement should be applied when determining whether or not a system is complex. Comparison with similar, previously approved systems is sometimes helpful. All relevant systems attributes should be considered; however, the complexity of the software and hardware need not be a dominant factor in the determination of complexity at the system level, e.g., the design may be very complex, such as a satellite communication system, but its function may be fairly simple.

b. *Single Failure Considerations*.

(1) According to the requirements of CS 25.1309b(1)(ii), a Catastrophic Failure Condition must not result from the failure of a single component, part, or element of a system. Failure containment should be provided by the system design to limit the propagation of the effects of any single failure to preclude Catastrophic Failure Conditions. In addition, there must be no common cause failure, which could affect both the single component, part, or element, and its failure containment provisions. A single failure includes any set of failures, which cannot be shown to be independent from each other. Appendix 1 and Document referenced in paragraph 3b(4) describe types of common cause analyses, which may be conducted, to assure that independence is maintained. Failure containment techniques available to establish independence may include partitioning, separation, and isolation.

(2) While single failures must normally be assumed to occur, there are cases where it is obvious that, from a realistic and practical viewpoint, any knowledgeable, experienced person would unequivocally conclude that a failure mode simply would not occur, unless it is associated with a wholly unrelated Failure Condition that would itself be Catastrophic. Once identified and accepted, such cases need not be considered failures in the context of CS 25.1309. For example, with simply loaded static elements, any failure mode, resulting from fatigue fracture, can be assumed to be prevented if this element is shown to meet the damage tolerance requirements of CS 25.571.

c. *Common Cause Failure Considerations*. An analysis should consider the application of the fail-safe design concept described in paragraph 6b and give special attention to ensure the effective use of design and installation techniques that would prevent single failures or other events from damaging or otherwise adversely affecting more than one redundant system channel, more than one system performing operationally similar functions, or any system and an associated safeguard. When considering such common-cause failures or other events, consequential or cascading effects should be taken into account. Some examples of such potential common cause failures or other events would include rapid release of energy from concentrated sources such as uncontained failures of rotating parts (other than engines and propellers) or pressure vessels, pressure differentials, non-catastrophic structural failures, loss of environmental conditioning, disconnection of more than one subsystem or component by over temperature protection devices, contamination by fluids, damage from localised fires, loss of power supply or return (e.g. mechanical damage or deterioration of connections), excessive voltage, physical or environmental interactions among parts, errors, or events external to the system or to the aeroplane (see Document referenced in paragraph 3b(4)).

d. *Depth of Analysis*. The following identifies the depth of analysis expected based on the classification of a Failure Condition.

(1) *No Safety Effect Failure Conditions*. A Functional Hazard Assessment, with a design and installation appraisal, to establish independence from other functions is necessary for the safety assessment of these Failure Conditions. If it is chosen not to do an FHA, the safety effects may be derived from the design and installation appraisal.

(2) *Minor Failure Conditions*. A Functional Hazard Assessment, with a design and installation appraisal, to establish independence from other functions is necessary for the safety assessment of these Failure Conditions. Combinations of Failure Condition effects, as noted in paragraph 10 above, must also be considered. If it is chosen not to do an FHA, the safety effects may be derived from the design and installation appraisal.

(3) *Major Failure Conditions*. Major Failure Conditions must be Remote:

(i) If the system is similar in its relevant attributes to those used in other aeroplanes and the effects of failure would be the same, then design and installation appraisals (as described in Appendix 1), and satisfactory service history of the equipment being analysed, or of similar design, will usually be acceptable for showing compliance.

(ii) For systems that are not complex, where similarity cannot be used as the basis for compliance, then compliance may be shown by means of a qualitative assessment which shows that the system level Major Failure Conditions, of the system as installed, are consistent with the FHA and are Remote, e.g., redundant systems.

(iii) For complex systems without redundancy, compliance may be shown as in paragraph 11d(3)(ii) of this AMC. To show that malfunctions are indeed Remote in systems of high complexity without redundancy (for example, a system with a self-monitoring microprocessor), it is sometimes necessary to conduct a qualitative functional Failure Modes and Effects Analysis (FMEA) supported by failure rate data and fault detection coverage analysis.

(iv) An analysis of a redundant system is usually complete if it shows isolation between redundant system channels and satisfactory reliability for each channel. For complex systems where functional redundancy is required, a qualitative FMEA and qualitative fault tree analysis may be necessary to determine that redundancy actually exists (e.g. no single failure affects all functional channels).

(4) *Hazardous and Catastrophic Failure Conditions*. Hazardous Failure Conditions must be Extremely Remote, and Catastrophic Failure Conditions must be Extremely Improbable:

(i) Except as specified in paragraph 11d(4)(ii) below a detailed safety analysis will be necessary for each Hazardous and Catastrophic Failure Condition identified by the functional hazard assessment. The analysis will usually be a combination of qualitative and quantitative assessment of the design.

(ii) For very simple and conventional installations, i.e. low complexity and similarity in relevant attributes, it may be possible to assess a Hazardous or Catastrophic Failure Condition as being Extremely Remote or Extremely Improbable, respectively, on the basis of experienced engineering judgement, using only qualitative analysis. The basis for the assessment will

be the degree of redundancy, the established independence and isolation of the channels and the reliability record of the technology involved. Satisfactory service experience on similar systems commonly used in many aeroplanes may be sufficient when a close similarity is established in respect of both the system design and operating conditions.

(iii) For complex systems where true similarity in all relevant attributes, including installation attributes, can be rigorously established, it may be also possible to assess a Hazardous or Catastrophic Failure Condition as being Extremely Remote or Extremely Improbable, respectively, on the basis of experienced engineering judgement, using only qualitative analysis. A high degree of similarity in both design and application is required to be substantiated.

e. *Calculation of Average Probability per Flight Hour (Quantitative Analysis)*.

(1) The Average Probability per Flight Hour is the probability of occurrence, normalised by the flight time, of a Failure Condition during a flight, which can be seen as an average over all possible flights of the fleet of aeroplane to be certified. The calculation of the Average Probability per Flight Hour for a Failure Condition should consider:

(i) the average flight duration and the average flight profile for the aeroplane type to be certified,

(ii) all combinations of failures and events that contribute to the Failure Condition,

(iii) the conditional probability if a sequence of events is necessary to produce the Failure Condition,

(iv) the relevant "at risk" time if an event is only relevant during certain flight phases,

(v) the average exposure time if the failure can persist for multiple flights.

(2) The details how to calculate the Average Probability per Flight Hour for a Failure Condition are given in Appendix 3 of this AMC.

(3) If the probability of a subject Failure Condition occurring during a typical flight of mean duration for the aeroplane type divided by the flight's mean duration in hours is likely to be significantly different from the predicted average rate of occurrence of that Failure Condition during the entire operational life of all aeroplanes of that type, then a risk model that better reflects the Failure Condition should be used.

(4) It is recognised that, for various reasons, component failure rate data are not precise enough to enable accurate estimates of the probabilities of Failure Conditions. This results in some degree of uncertainty, as indicated by the wide line in Figure 1, and the expression "on the order of" in the descriptions of the quantitative probability terms that are provided above. When calculating the estimated probability of each Failure Condition, this uncertainty should be accounted for in a way that does not compromise safety.

f. *Integrated Systems*. Interconnections between systems have been a feature of aeroplane design for many years and CS 25.1309(b) recognises this in requiring systems to be considered in relation to other systems. Providing the interfaces between systems are

relatively few and simple, and hence readily understandable, compliance may often be shown through a series of system safety assessments, each of which deals with a particular Failure Condition (or more likely a group of Failure Conditions) associated with a system and, where necessary, takes account of failures arising at the interface with other systems. This procedure has been found to be acceptable in many past certification programs. However, where the systems and their interfaces become more complex and extensive, the task of demonstrating compliance may become more complex. It is therefore essential that the means of compliance are considered early in the design phase to ensure that the design can be supported by a viable safety assessment strategy. Aspects of the guidance material covered elsewhere in this AMC and which should be given particular consideration are as follows:

(1) planning the proposed means of compliance,

(2) considering the importance of architectural design in limiting the impact and propagation of failures,

(3) the potential for common cause failures and cascade effects and the possible need to assess combinations of multiple lower level (e.g. Major) Failure Conditions,

(4) the importance of multi-disciplinary teams in identifying and classifying significant Failure Conditions,

(5) effect of crew and maintenance procedures in limiting the impact and propagation of failures.

In addition, rigorous and well-structured design and development procedures play an essential role in facilitating a methodical safety assessment process and providing visibility to the means of compliance. Document referenced in paragraph 3b(3) may be helpful in the certification of highly integrated or complex aircraft systems.

g. *Operational or Environmental Conditions*. A probability of one should usually be used for encountering a discrete condition for which the aeroplane is designed, such as instrument meteorological conditions or Category III weather operations. However, Appendix 4 contains allowable probabilities, which may be assigned to various operational and environmental conditions for use in computing the average probability per flight hour of Failure Conditions resulting from multiple independent failures, without further justification. Appendix 4 is provided for guidance and is not intended to be exhaustive or prescriptive. At this time, a number of items have no accepted standard statistical data from which to derive a probability figure. However, these items are included for either future consideration or as items for which the applicant may propose a probability figure supported by statistically valid data or supporting service experience. The applicant may propose additional conditions or different probabilities from those in Appendix 4 provided they are based on statistically valid data or supporting service experience. The applicant should obtain early concurrence of the Agency when such conditions are to be included in an analysis. When combining the probability of such a random condition with that of a system failure, care should be taken to ensure that the condition and the system failure are independent of one another, or that any dependencies are properly accounted for.

h. *Justification of Assumptions, Data Sources and Analytical Techniques*.

(1) Any analysis is only as accurate as the assumptions, data, and analytical techniques it uses. Therefore, to show compliance with the requirements, the underlying assumptions, data, and analytic techniques should be identified and justified to

assure that the conclusions of the analysis are valid. Variability may be inherent in elements such as failure modes, failure effects, failure rates, failure probability distribution functions, failure exposure times, failure detection methods, fault independence, limitation of analytical methods, processes, and assumptions. The justification of the assumptions made with respect to the above items should be an integral part of the analysis. Assumptions can be validated by using experience with identical or similar systems or components with due allowance made for differences of design, duty cycle and environment. Where it is not possible to fully justify the adequacy of the safety analysis and where data or assumptions are critical to the acceptability of the Failure Condition, extra conservatism should be built into either the analysis or the design. Alternatively any uncertainty in the data and assumptions should be evaluated to the degree necessary to demonstrate that the analysis conclusions are insensitive to that uncertainty.

(2) Where adequate validation data is not available (e.g., new or novel systems), and extra conservatism is built into the analysis, then the normal post-certification in-service follow-up may be performed to obtain the data necessary to alleviate any consequence of the extra conservatism. This data may be used, for example, to extend system check intervals.

12. ***OPERATIONAL AND MAINTENANCE CONSIDERATIONS***.

This AMC addresses only those operational and maintenance considerations that are directly related to compliance with CS 25.1309; other operational and maintenance considerations are not discussed herein. Flight crew and maintenance tasks related to compliance with this requirement should be appropriate and reasonable. However, quantitative assessments of crew errors are not considered feasible. Therefore, reasonable tasks are those for which full credit can be taken because they can realistically be anticipated to be performed correctly when they are required or scheduled. In addition, based on experienced engineering and operational judgement, the discovery of obvious failures during normal operation or maintenance of the aeroplane may be assumed, even though identification of such failures is not the primary purpose of the operational or maintenance actions.

a. *Flight crew Action*.

When assessing the ability of the flight crew to cope with a Failure Condition, the information provided to the crew and the complexity of the required action should be considered. If the evaluation indicates that a potential Failure Condition can be alleviated or overcome without jeopardising other safety related flight crew tasks and without requiring exceptional pilot skill or strength, credit may be taken for both qualitative and quantitative assessments. Similarly, credit may be taken for correct flight crew performance of the periodic checks required to demonstrate compliance with CS 25.1309(b) provided overall flight crew workload during the time available to perform them is not excessive and they do not require exceptional pilot skill or strength. Unless flight crew actions are accepted as normal airmanship, they should be described in the approved Aeroplane Flight Manual.

b. *Maintenance Action*.

Credit may be taken for correct accomplishment of reasonable maintenance tasks, for both qualitative and quantitative assessments. The maintenance tasks needed to show compliance with CS 25.1309(b) should be established. In doing this, the following maintenance scenarios can be used:

(1) Annunciated failures will be corrected before the next flight, or a maximum time period will be established before a maintenance action is required. If the latter is acceptable, the analysis should establish the maximum allowable interval before the maintenance action is required. These maximum allowable intervals should be reflected in either the MMEL or the type certificate.

(2) Latent failures will be identified by a scheduled maintenance task. If this approach is taken, and the Failure Condition is Hazardous or Catastrophic, then a CCMR maintenance task should be established. Some Latent Failures can be assumed to be identified based upon return to service test on the LRU following its removal and repair (component Mean Time Between Failures (MTBF) should be the basis for the check interval time).

c. *Candidate Certification Maintenance Requirements*.

(1) By detecting the presence of, and thereby limiting the exposure time to significant latent failures that would, in combination with one or more other specific failures or events identified by safety analysis, result in a Hazardous or Catastrophic Failure Condition, periodic maintenance or flight crew checks may be used to help show compliance with CS 25.1309(b). Where such checks cannot be accepted as basic servicing or airmanship they become CCMRs. AMC 25.19 details the handling of CCMRs.

(2) Rational methods, which usually involve quantitative analysis, or relevant service experience should be used to determine check intervals. This analysis contains inherent uncertainties as discussed in paragraph 11e(3). Where periodic checks become CMRs these uncertainties justify the controlled escalation or exceptional short-term extensions to individual CMRs allowed under AMC 25.19.

d. *Flight with Equipment or Functions known to be Inoperative*.

A list may be developed of equipment and functions which need not be operative for flight, based on stated compensating precautions that should be taken, e.g., operational or time limitations, flight crew procedures, or ground crew checks. The documents used to show compliance with CS 25.1309, together with any other relevant information, should be considered in the development of this list, which then becomes the basis for a Master Minimum Equipment List (MMEL). Experienced engineering and operational judgement should be applied during the development of the MMEL.

13. ***ASSESSMENT OF MODIFICATIONS TO PREVIOUSLY CERTIFICATED AEROPLANES.***

The means to assure continuing compliance with CS 25.1309 for modifications to previously certificated aeroplanes should be determined on a case-by-case basis and will depend on the applicable aeroplane certification basis and the extent of the change being considered. The change could be a simple modification affecting only one system or a major redesign of many systems, possibly incorporating new technologies. The minimal effort for demonstrating compliance to 25.1309 for any modification is an assessment of the impact on the original system safety assessment. The result of this assessment may range from a simple statement that the existing system safety assessment still applies to the modified system in accordance with the original means of compliance, to the need for new means of compliance encompassing the plan referred to in paragraph 9b. (STC applicants, if the TC holder is unwilling to release or transfer proprietary data in this regard, the STC applicant may have to create the System Safety Assessment. Further guidance may be found in paragraph 11 of Document referenced in paragraph 3b(3).) It is recommended that the Agency be contacted early to obtain agreement on the means of compliance.

[Amdt 25/2]

Appendix 1 – Assessment methods

ED Decision 2003/2/RM

Various methods for assessing the causes, severity, and probability of Failure Conditions are available to support experienced engineering and operational judgement. Some of these methods are structured. The various types of analysis are based on either inductive or deductive approaches. Probability assessments may be qualitative or quantitative. Descriptions of some types of analysis are provided below and in Document referenced in paragraph 3b(4).

a. *Design Appraisal.* This is a qualitative appraisal of the integrity and safety of the system design.

b. *Installation Appraisal.* This is a qualitative appraisal of the integrity and safety of the installation. Any deviations from normal, industry accepted installation practices, such as clearances or tolerances, should be evaluated, especially when appraising modifications made after entry into service.

c. *Failure Modes and Effects Analysis.* This is a structured, inductive, bottom-up analysis, which is used to evaluate the effects on the system and the aeroplane of each possible element or component failure. When properly formatted, it will aid in identifying latent failures and the possible causes of each failure mode. Document referenced in paragraph 3b(4) provides methodology and detailed guidelines, which may be used to perform this type of analysis. A FMEA could be apiece part FMEA or a functional FMEA. For modern microcircuit based LRUs and systems an exhaustive piece part FMEA is not practically feasible with the present state of the art. In that context, a FMEA may be more functional than piece part oriented. A functional oriented FMEA can lead to uncertainties in the qualitative and quantitative aspects, which can be compensated for by more conservative assessment such as:

– assuming all failure modes result in the Failure Conditions of interest,

– careful choice of system architecture,

– taking into account the experience lessons learned on the use of similar technology.

d. *Fault Tree or Dependence Diagram Analysis.* Structured, deductive, top-down analyses that are used to identify the conditions, failures, and events that would cause each defined Failure Condition. They are graphical methods of identifying the logical relationship between each particular Failure Condition and the primary element or component failures, other events, or combinations thereof that can cause it. A failure modes and effects analysis may be used as the source document for those primary failures or other events.

e. *Markov Analysis.* A Markov model (chain) represents various system states and the relationships among them. The states can be either operational or non-operational. The transitions from one state to another are a function of the failure and repair rates. Markov analysis can be used as a replacement for fault tree/dependence diagram analysis, but it often leads to more complex representation, especially when the system has many states. It is recommended that Markov analysis be used when fault tree or dependence diagrams are not easily usable, namely to take into account complex transition states of systems which are difficult to represent and handle with classical fault tree or dependence diagram analysis.

f. *Common Cause Analysis.* The acceptance of adequate probability of Failure Conditions is often derived from the assessment of multiple systems based on the assumption that failures are independent. Therefore, it is necessary to recognise that such independence may not exist in the practical sense and specific studies are necessary to ensure that independence can either be assured or deemed acceptable.

The Common Cause Analysis is sub-divided into three areas of study:

(1) *Zonal Safety Analysis.* This analysis has the objective of ensuring that the equipment installations within each zone of the aeroplane are at an adequate safety standard with respect to design and installation standards, interference between systems, and maintenance errors. In those areas of the aeroplane where multiple systems and components are installed in close proximity, it should be ensured that the zonal analysis would identify any failure or malfunction which by itself is considered sustainable but which could have more serious effects when adversely affecting other adjacent systems or components.

(2) *Particular Risk Analysis.* Particular risks are defined as those events or influences, which are outside the systems concerned. Examples are fire, leaking fluids, bird strike, tire burst, high intensity radiated fields exposure, lightning, uncontained failure of high energy rotating machines, etc. Each risk should be the subject of a specific study to examine and document the simultaneous or cascading effects or influences, which may violate independence.

(3) *Common Mode Analysis.* This analysis is performed to confirm the assumed independence of the events, which were considered in combination for a given Failure Condition. The effects of specification, design, implementation, installation, maintenance, and manufacturing errors, environmental factors other than those already considered in the particular risk analysis, and failures of system components should be considered.

g. *Safety Assessment Process.* Appendix 2 provides an overview of the Safety Assessment Process.

Appendix 2 – Safety Assessment Process Overview

ED Decision 2006/005/R

In showing compliance with 25.1309(b), the considerations covered in this AMC should be addressed in a methodical and systematic manner, which ensures that the process and its findings are visible and readily assimilated. This appendix is provided primarily for those who are not familiar with the various methods and procedures generally used in the industry to conduct safety assessments. This guide and Figures A2-1 and A2-2 are not certification checklists, and they do not include all the information provided in this AMC. There is no necessity for them to be used or for the Agency to accept them, in whole or in part, to show compliance with any regulation. Their sole purposes are to assist, by illustrating a systematic approach to safety assessments, to enhance understanding and communication by summarising some of the information provided in this AMC, and to provide some suggestions on documentation. More detailed guidance can be found in Document referenced in paragraph 3b(4). Document referenced in paragraph 3b(3) includes additional guidance on how the safety assessment process relates to the system development process.

a. Define the system and its interfaces, and identify the functions that the system is to perform. Determine whether or not the system is complex, similar to systems used on other aeroplanes, or conventional. Where multiple systems and functions are to be evaluated, consider the relationships between multiple safety assessments.

b. Identify and classify Failure Conditions. All relevant engineering organisations, such as systems, structures, propulsion, and flight test, should be involved in this process. This identification and classification may be done by conducting a Functional Hazard Assessment, which is usually based on one of the following methods, as appropriate:

(1) If the system is not complex and its relevant attributes are similar to those of systems used on other aeroplanes, the identification and classification may be derived from

design and installation appraisals and the service experience of the comparable, previously approved systems.

(2) If the system is complex, it is necessary to systematically postulate the effects on the safety of the aeroplane and its occupants resulting from any possible failures, considered both individually and in combination with other failures or events.

c. Choose the means to be used to determine compliance with CS 25.1309. The depth and scope of the analysis depends on the types of functions performed by the system, the severity of system Failure Conditions, and whether or not the system is complex (see Figure A2-2). For Major Failure Conditions, experienced engineering and operational judgement, design and installation appraisals and comparative service experience data on similar systems may be acceptable, either on their own or in conjunction with qualitative analyses or selectively used quantitative analyses. For Hazardous or Catastrophic Failure Conditions, a very thorough safety assessment is necessary. The early concurrence of the Agency on the choice of an acceptable means of compliance should be obtained.

d. Conduct the analysis and produce the data, which are agreed with the certification authority as being acceptable to show compliance. A typical analysis should include the following information to the extent necessary to show compliance:

(1) A statement of the functions, boundaries, and interfaces of the system.

(2) A list of the parts and equipment of which the system is comprised, including their performance specifications or design standards and development assurance levels if applicable. This list may reference other documents, e.g., European Technical Standard Orders (ETSOs), manufacturers or military specifications, etc.

(3) The conclusions, including a statement of the Failure Conditions and their classifications and probabilities (expressed qualitatively or quantitatively, as appropriate) that show compliance with the requirements of CS 25.1309.

(4) A description that establishes correctness and completeness and traces the work leading to the conclusions. This description should include the basis for the classification of each Failure Condition (e.g., analysis or ground, flight, or simulator tests). It should also include a description of precautions taken against common-cause failures, provide any data such as component failure rates and their sources and applicability, support any assumptions made, and identify any required flight crew or ground crew actions, including any CCMRs.

e. Assess the analyses and conclusions of multiple safety assessments to ensure compliance with the requirements for all aeroplane level Failure Conditions.

f. Prepare compliance statements, maintenance requirements, and flight manual requirements.

Figure A2-1: Safety Assessment Process Overview

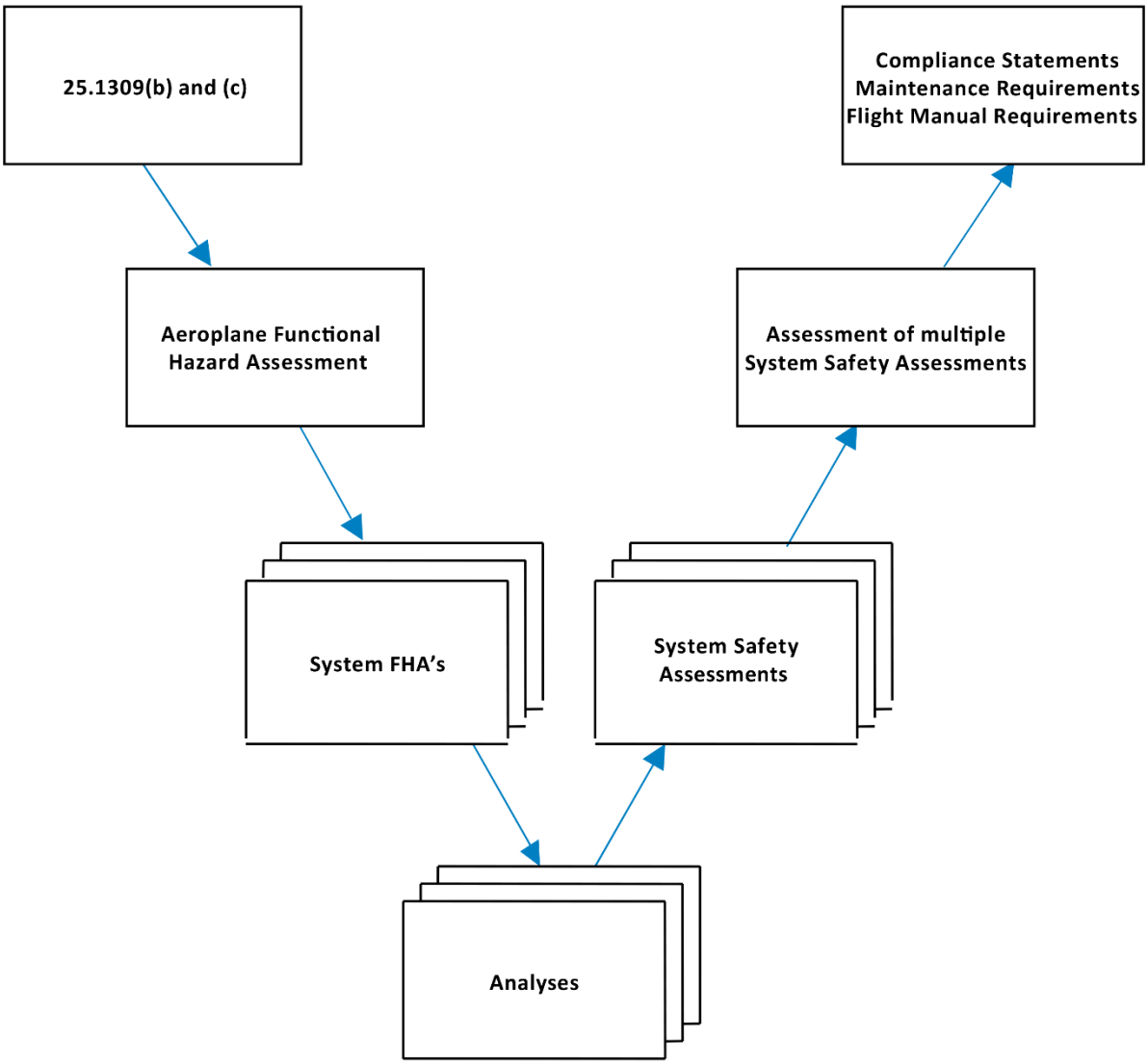

Figure A2-2: Depth of Analysis Flowchart

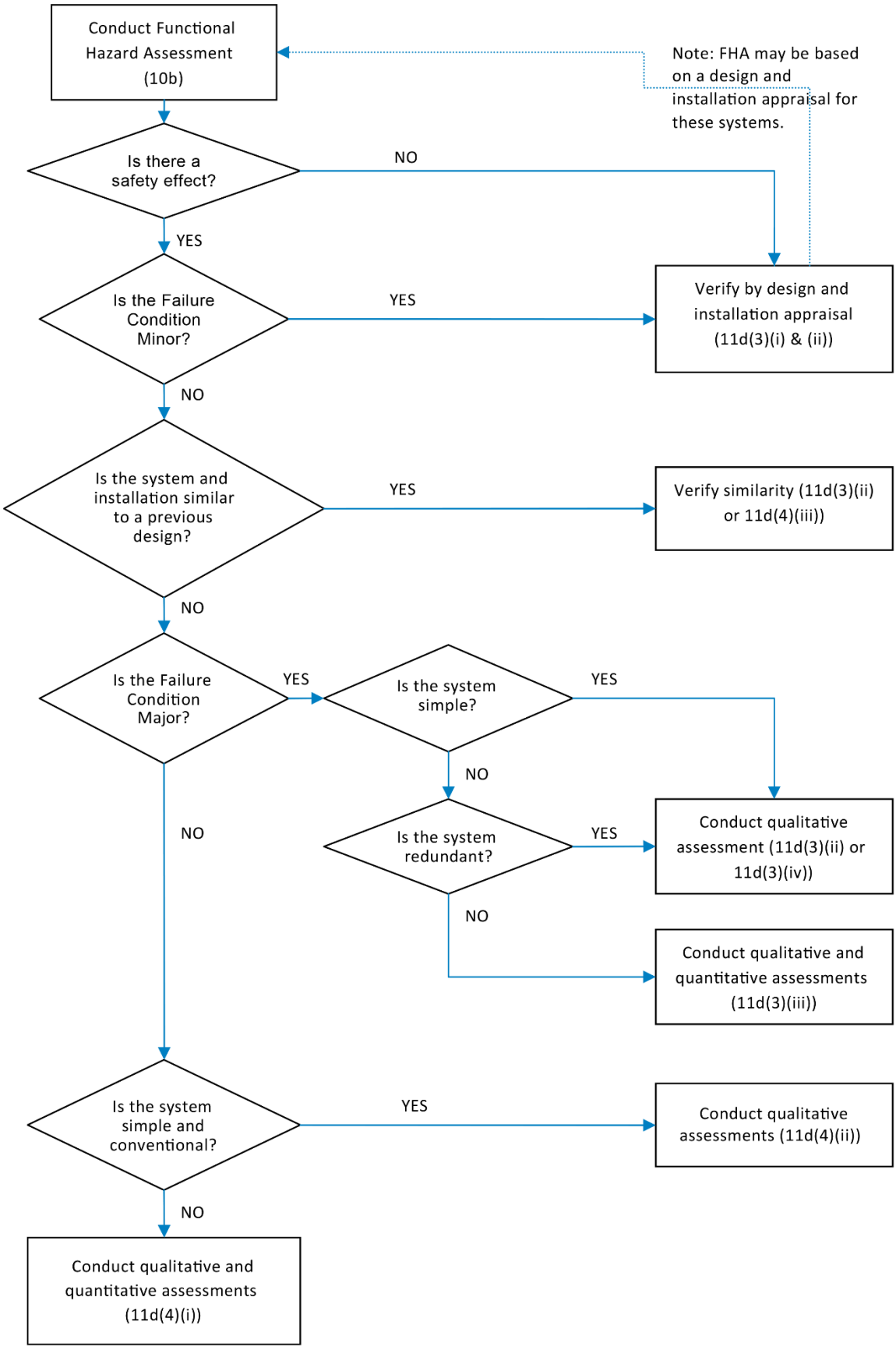

[Amdt 25/2]

Appendix 3 – Calculation of the average probability per flight hour

ED Decision 2003/2/RM

The purpose of this material is to provide guidance for calculating the "Average Probability per Flight Hour" for a Failure Condition so that it can be compared with the quantitative criteria of the AMC.

The process of calculating the "Average Probability per Flight Hour" for a Failure Condition will be described as a four-step process and is based on the assumption that the life of an aeroplane is a sequence of "Average Flights".

Step 1: Determination of the "Average Flight"

Step 2: Calculation of the probability of a Failure Condition for a certain "Average Flight"

Step 3: Calculation of the "Average Probability per Flight" of a Failure Condition

Step 4: Calculation of the "Average Probability Per Flight Hour" of a Failure Condition

a. *Determination of the "Average Flight".* The "Average Probability per Flight Hour" is to be based on an "Average Flight". The average flight duration and average flight profile for the fleet of aeroplane to be certified should be estimated. The average flight duration should be estimated based on expectations and historical experience for similar types. The "Average Flight" duration should reflect the best estimate of the cumulative flight hours divided by the cumulative aeroplane flights for the service life of the aeroplane. The "Average Flight" profile should be based on the operating weight and performance expectations for the average aeroplane when flying a flight of average duration in an ICAO standard atmosphere. The duration of each flight phase (e.g. takeoff, climb, cruise, descent, approach and landing) in the "Average Flight" should be based on the average flight profile. Average taxi times for departure and arrival at an average airport should be considered where appropriate and added to the average flight time. The "Average Flight" duration and profile should be used as the basis for determining the "Average Probability per Flight Hour" for a quantitative safety assessment.

b. *Calculation of the Probability of a Failure Condition for a certain "Average Flight".* The probability of a Failure Condition occurring on an "Average Flight" P_{Flight}(Failure Condition) should be determined by structured methods (see Document referenced in paragraph 3b(4) for example methods) and should consider all significant elements (e.g. combinations of failures and events) that contribute to the Failure Condition. The following should be considered:

(1) The individual part, component, and assembly failure rates utilised in calculating the "Average Probability per Flight Hour" should be estimates of the mature constant failure rates after infant mortality and prior to wear-out and should be based on all causes of failure (operational, environmental, etc.). Where available, service history of same or similar components in the same or similar environment should be used.

(2) If the failure is only relevant during certain flight phases, the calculation should be based on the probability of failure during the relevant "at risk" time for the "Average Flight".

(3) If one or more failed elements in the system can persist for multiple flights (latent, dormant, or hidden failures), the calculation should consider the relevant exposure times (e.g. time intervals between maintenance and operational checks/ inspections). In such cases the probability of the Failure Condition increases with the number of flights during the latency period.

(4) If the failure rate of one element varies during different flight phases, the calculation should consider the failure rate and related time increments in such a manner as to establish the probability of the Failure Condition occurring on an "Average Flight":

It is assumed that the "Average Flight" can be divided into n phases (phase 1, ... , phase n). Let T_F the "Average Flight" duration, T_j the duration of phase j and t_j the transition point between T_j and T_{j+1}, j=1, ... ,n . I.e.

$$T_F = \sum_{j=1}^{n} T_j \ \ and \ t_j - t_{j-1} = T_j; j = 1, \dots, n$$

Let $l_j(t)$ the failure rate function during phase j, i.e. for t Î $[t_{j-1},t_j]$.

Remark: $l_j(t)$ may be equal 0 for all t Î $[t_{j-1},t_j]$ for a specific phase j.

Let P_{Flight} (Failure) the probability that the element fails during one certain flight (including nonflying time) and $P_{Phase\ j}$ (Failure) the probability that the element fails in phase j.

Two cases are possible:

(i) The element is checked operative at the beginning of the certain flight. Then

$$P_{Flight}(Failure) = \sum_{j=1}^{n} P_{Phase\ j}\,(Failure) = \sum_{j=1}^{n} P\big(Failure \mid t \in [t_{j-1}, t_j]\big)$$

$$= 1 - \prod_{i=1}^{n} exp\left(-\int_{t_{i-1}}^{t_i} \lambda_i(x)dx\right)$$

(ii) The state of the item is unknown at the beginning of the certain flight. Then

$$P_{Flight}(Failure) = P_{prior}(Failure)$$

$$+\big(1 - P_{prior}(Failure)\big)\cdot\left(1 - \prod_{i=1}^{n} exp\left(-\int_{t_{i-1}}^{t_i} \lambda_i(x)dx\right)\right)$$

where P_{prior} (Failure) is the probability that the failure of the element has occurred prior to the certain flight.

(5) If there is only an effect when failures occur in a certain order, the calculation should account for the conditional probability that the failures occur in the sequence necessary to produce the Failure Condition.

c. *Calculation of the Average Probability per Flight of a Failure Condition*. The next step is to calculate the "Average Probability per Flight" for the Failure Condition. I.e. the probability of the Failure Condition for each flight (which might be different although all flights are "Average Flights") during the relevant time (e.g. the least common multiple of the exposure times or the aeroplane life) should be calculated, summed up and divided by the number of flights during that period. The principles of calculating are described below and also in more detail in Document referenced in paragraph 3b(4).

$$P_{Average\ per\ Flight}(Failure\ Condition) = \frac{\sum_{k=1}^{N} P_{FLight\ k}(Failure\ Condition)}{N}$$

Where N is the quantity of all flights during the relevant time, and $P_{Flightk}$ is the probability that the Failure Condition occurs in flight k.

d. *Calculation of the Average Probability per Flight Hour of a Failure Condition.* Once the "Average Probability per Flight" has been calculated it should be normalised by dividing it by the "Average Flight" duration TF in Flight Hours to obtain the "Average Probability per Flight Hour". This

quantitative value should be used in conjunction with the hazard category/effect established by the FHA to determine if it is compliant for the Failure Condition being analysed.

$$P_{Average\ per\ FH}(Failure\ Condition) = \frac{P_{Average\ per\ Flight}(Failure\ Condition)}{T_F}$$

Appendix 4 – Allowable Probabilities

ED Decision 2003/2/RM

The following probabilities may be used for environmental conditions and operational factors in quantitative safety analyses:

Environmental Factors

Condition	Model or other Justification	Probability
Normal icing (trace, light, moderate icing)		1
Severe icing		
Head wind >25 kts during takeoff and landing	AC 120-28 CS-AWO	10^{-2} per flight
Tail wind >10 kts during takeoff and landing	AC 120-28 CS-AWO	10^{-2} per flight
Cross wind >20 kts during takeoff and landing	AC 120-28 CS-AWO	10^{-2} per flight
Limit design gust and turbulence	CS 25.341 (Under review by Structures Harmonisation Working Group)	10^{-5} per flight hour
Air temperature < -70°C		No accepted standard data
Lightning strike		No accepted standard data
HIRF conditions		No accepted standard data

Aeroplane Configurations

Configuration	Model or other Justification	Probability
Centre of gravity	Standard industry practice	Uniform over approved range
Landing and Takeoff Weights/Masses	Standard industry practice	Uniform over approved range

Flight Conditions

Condition	Model or other Justification	Probability
Flight condition requiring Stall Warning	Assumption	10^{-2} per flight
Flight condition resulting in a Stall	Assumption	10^{-5} per flight
Excessiveness of V_{MO}/M_{MO}	Assumption	10^{-2} per flight
Flight condition greater than or equal to 1.5 g		No accepted standard data
Flight condition less than or equal to 0 g		No accepted standard data

Mission Dependencies

Event	Model or other Justification	Probability
Any rejected take-off		No accepted standard data
High energy rejected take-off		No accepted standard data
Need to jettison fuel		No accepted standard data
Go-around		No accepted standard data

Other Events

Event	Model or other Justification	Probability
Fire in a lavatory		No accepted standard data
Fire in a cargo compartment		No accepted standard data
Fire in APU compartment		No accepted standard data
Engine fire		No accepted standard data
Cabin high altitude requiring passenger oxygen		No accepted standard data

Notes:

1. If "No accepted standard data" appears in the above tables, the applicant must provide a justified value if a probability less than 1 is to be used in the analysis.
2. The probabilities quoted in this Appendix have been found to be appropriate for use in the context of a quantitative safety analysis performed to demonstrate compliance with CS 25.1309. They may not always be appropriate for use in the context of other requirements.

CS 25.1310 Power source capacity and distribution

ED Decision 2003/2/RM

(a) Each installation whose functioning is required for type certification or by operating rules and that requires a power supply is an "essential load" on the power supply. The power sources and the system must be able to supply the following power loads in probable operating combinations and for probable durations (see AMC 25.1310(a)):

(1) Loads connected to the system with the system functioning normally.

(2) Essential loads, after failure of any one prime mover, power converter, or energy storage device.

(3) Essential loads after failure of -

(i) Any one engine on two-engine aeroplanes; and

(ii) Any two engines on three-or-more engine aeroplanes.

(4) Essential loads for which an alternate source of power is required, after any failure or malfunction in any one-power supply system, distribution system, or other utilisation system.

(b) In determining compliance with sub-paragraphs (a)(2) and (3) of this paragraph, the power loads may be assumed to be reduced under a monitoring procedure consistent with safety in the kinds of operation authorised. Loads not required in controlled flight need not be considered for the two-engine-inoperative condition on aeroplanes with three or more engines.

AMC 25.1310(a) Power source capacity and distribution

ED Decision 2003/2/RM

When alternative or multiplication of systems and equipment is provided to meet the requirements of CS 25.1310(a), the segregation between circuits should be such as to minimise the risk of a single occurrence causing multiple failures of circuits or power supplies of the system concerned. For example, electrical cable bundles or groups of hydraulic pipes should be so segregated as to prevent damage to the main and alternative systems and power supplies.

CS 25.1315 Negative acceleration

ED Decision 2003/2/RM

No hazardous malfunction may occur as a result of the aeroplane being operated at the negative accelerations within the flight envelopes prescribed in CS 25.333. This must be shown for the greatest duration expected for the acceleration. (See also AMC 25.1315.)

AMC 25.1315 Negative accelerations

ED Decision 2003/2/RM

1 Demonstration of compliance with CS 25.1315 should be made by analysis and/or ground tests, and should be supported by flight tests.

2 *Analysis and/or Ground Tests.* Appropriate analysis and/or ground tests should be made on components of essential fluid systems and such other components as are likely to be adversely affected by negative acceleration to demonstrate that they will not produce a hazardous malfunction.

3 *Flight Tests*

3.1 The aeroplane should be subjected to –

a. One continuous period of at least five seconds at less than zero g, and, separately,

b. A period containing at least two excursions to less than zero g in rapid succession, in which the total time at less than zero g is at least five seconds.

3.2 The tests should be made at the most critical condition from the fuel flow standpoint, e.g. with fuel flow corresponding to maximum continuous power and with the fuel representing a typical operational low fuel condition as for a missed approach.

CS 25.1316 System lightning protection

ED Decision 2003/2/RM

(a) For functions whose failure would contribute to or cause a condition that would prevent the continued safe flight and landing of the aeroplane, each electrical and electronic system that performs these functions must be designed and installed to ensure that the operation and operational capabilities of the systems to perform these functions are not adversely affected when the aeroplane is exposed to lightning.

(b) For functions whose failure would contribute to or cause a condition that would reduce the capability of the aeroplane or the ability of the flight crew to cope with adverse operating conditions, each electrical and electronic system that performs these functions must be designed and installed to ensure that these functions can be recovered in a timely manner after the aeroplane is exposed to lightning.

(c) Compliance with the lightning protection criteria prescribed in sub-paragraphs (a) and (b) of this paragraph must be shown for exposure to a severe lightning environment. The aeroplane must be designed for and it must be verified that aircraft electrical/electronic systems are protected against the effects of lightning by:

(1) Determining the lightning strike zones for the aeroplane;

(2) Establishing the external lightning environment for the zones;

(3) Establishing the internal environment;

(4) Identifying all the electrical and electronic systems that are subject to the requirements of this paragraph, and their locations on or within the aeroplane;

(5) Establishing the susceptibility of the systems to the internal and external lightning environment;

(6) Designing protection; and

(7) Verifying that the protection is adequate.

INSTRUMENTS: INSTALLATION

CS 25.1321 Arrangement and visibility

ED Decision 2003/2/RM

(a) Each flight, navigation, and powerplant instrument for use by any pilot must be plainly visible to him from his station with the minimum practicable deviation from his normal position and line of vision when he is looking forward along the flight path.

(b) The flight instruments required by CS 25.1303 must be grouped on the instrument panel and centred as nearly as practicable about the vertical plane of the pilot's forward vision. In addition –

(1) The instrument that most effectively indicates attitude must be on the panel in the top centre position;

(2) The instrument that most effectively indicates airspeed must be adjacent to and directly to the left of the instrument in the top centre position;

(3) The instrument that most effectively indicates altitude must be adjacent to and directly to the right of the instrument in the top centre position; and

(4) The instrument that most effectively indicates direction of flight must be adjacent to and directly below the instrument in the top centre position.

(c) Required powerplant instruments must be closely grouped on the instrument panel. In addition –

(1) The location of identical powerplant instruments for the engines must prevent confusion as to which engine each instrument relates; and

(2) Powerplant instruments vital to the safe operation of the aeroplane must be plainly visible to the appropriate crewmembers.

(d) Instrument panel vibration may not damage or impair the accuracy of any instrument.

(e) If a visual indicator is provided to indicate malfunction of an instrument, it must be effective under all probable cockpit lighting conditions.

CS 25.1322 Warning, caution, and advisory lights

ED Decision 2003/2/RM

If warning, caution, or advisory lights are installed in the cockpit, they must, unless otherwise approved by the Agency, be –

(a) Red, for warning lights (lights indicating a hazard, which may require immediate corrective action);

(b) Amber, for caution lights (lights indicating the possible need for future corrective action);

(c) Green, for safe operation lights; and

(d) Any other colour, including white, for lights not described in sub-paragraphs (a) to (c) of this paragraph, provided the colour differs sufficiently from the colours prescribed in sub-paragraphs (a) to (c) of this paragraph to avoid possible confusion.

AMC 25.1322 Alerting Systems

ED Decision 2006/005/R

1 INTRODUCTION

This AMC gives general guidance on the design and certification of alerting systems. The term "alerting system" is meant to include all the Warnings, Cautions and Advisories (see paragraph 3 below) on the flight deck whether they are provided by a single system or not. It includes both the means used to draw the attention of the crew to the existence of an abnormality or an aircraft condition and the means of identifying it. In any case where the guidance appears to conflict with a specific CS-25 requirement the requirement must take priority.

2 RELATED CERTIFICATION SPECIFICATIONS & RELATED DOCUMENTS

2.1 Requirements and associated AMC

CS 25.207	Stall warning
CS 25.672(a)	Stability augmentation and automatic power-operated systems
CS 25.699	Lift and drag device position
CS 25.703	Take-off warning
CS 25.729(e)	Gear not extended warnings
CS 25.783(e)	Doors not locked warnings
CS 25.841(b)	Cabin altitude warning
CS 25.857(c)	Cargo compartment smoke warnings
CS 25.1203	Fire-detector system
CS 25.1303(b)(5)	Attitude display systems
CS 25.1303(c)(1)	VMO/MMO warning
CS 25.1305	Engine warnings
CS 25.1309(c)	Warning information
CS 25.1322	Warnings and cautions
CS 25J1305	APU fire warning
CS-AWO 153	Audible warning of automatic pilot failure
CS-AWO 253	Audible warning of automatic pilot failure
CS-AWO 352	Indications and warnings

2.2 Related Documents

1	AMC 25-11	Electronic Display Systems
2	ARP 4102/4	Flight Deck Alerting System (FAS) Society of Automotive Engineers. July 1988.
3	ARINC Characteristic726	"Flight Warning Computer System" 8.9.80
4	CAA Paper 82017	"Guidelines for Auditory Warnings Systems on Civil Aircraft." November 1982
5	DOT/FAA RD-81/38.11	"Aircraft Alerting Systems Standardisation Study" Volume 2 "Aircraft Alerting Systems Design Guidelines".

3 DEFINITIONS

In this AMC, where the following terms are used, they have the following meanings:

– Alert: A signal to the crew intended to draw their attention to the existence of an abnormality, system fault or aircraft condition and to identify it.

– False Alert: An incorrect alert caused by a failure of the alerting system.

– Nuisance Alert: An unwanted alert not caused by an alerting system failure but by any other cause.

– Warning: Immediate recognition and corrective or compensatory action by the crew is required.

– Caution: Immediate crew awareness is required and subsequent crew action will be required.

– Advisory: Crew awareness is required and subsequent crew action may be required.

– Message: A caption light or text on a display system providing information on an abnormality or aircraft condition.

4 ALERTING (ATTENTION-GETTING) (See also Table 1)

4.1 The crew should be alerted to the presence of a Warning or Caution message by an attention-getting device. This may be achieved by any of the following:

4.1.1 Flashing red light for Warnings and flashing amber light for Cautions.

4.1.2 An aural signal coded to distinguish between a Warning and a Caution accompanied by steady or flashing red or amber lights (see 4.1.1).

4.1.3 A voice alert accompanied by steady or flashing lights.

There need not be an attention-getting signal for an Advisory.

4.2 The lights referred to in 4.1 above should be placed where they are in the normal field of view of each crew member (e.g. on or immediately below the glare shield) and visible in all lighting conditions but without being blinding. Manual dimming should not be provided unless the minimum setting retains adequate attention-getting qualities when flying from night into day conditions or an aural alert is also provided. Automatic dimming may be provided if an aural alert is also provided.

4.3 If aural signals are provided, the signal for a Warning should always take priority over that for a Caution. Voice alerts should be heard in order of priority.

4.4 It should be possible for the crew to extinguish an alerting light and silence an aural alert, preferably by pressing the light, unless CS requires otherwise.

TABLE 1

CATEGORY	CRITERIA	ALERTING SYSTEM CHARACTERISTICS (ATTENTION GETTING)		NOTES
		AURAL	VISUAL	
Warning	Immediate recognition and corrective or compensatory action by the crew is required	Optional unless required by CS	Red	Visual alert should flash if no aural
Caution	Immediate crew awareness is required and subsequent crew action will be required	Optional unless required by CS	Amber	Visual alert should flash if no aural
Advisory	Crew awareness is required and subsequent crew action may be required.	None	Not red	

Note: Some sub-division of Caution and/or Advisory alert categories is permitted if justified.

5 VISUAL SIGNALS

5.1 Warning and Caution messages should be grouped on a panel or display visible to all members of the minimum flight crew. Where it is not possible to find a single location visible to all crewmembers, duplicate panels or displays should be added. If space constraints make it necessary to split the panel into two parts located in different places, both parts should be visible to all members of the minimum flight crew and the alerting lights referred to in paragraph 4.1 should direct the attention of the crew to the appropriate part.

5.2 Warning messages as required by CS 25.1322 should be red and Caution messages should be amber. Advisories may be any colour except red, and preferably not amber.

5.3 The design of the aeroplane and its systems should be such as to minimise the number of warnings necessary.

5.4 Captions on the panel or messages on the display should be unambiguous and easily readable, i.e. they should identify the fault or abnormality clearly enough to direct the crew to the correct procedure.

Where the caption or message does not identify the nature and location of the fault sufficiently precisely to ensure the correct remedial action, additional indications should be located close to, or preferably on the appropriate switches or controls to direct the crew to them. In particular, engine fire warnings should be repeated on or near the controls for the appropriate engine so as to minimise the risk of shutting down the wrong engine.

5.5 Caution and Advisory messages on the panel or display may be suppressed by the crew provided that there remains an indication that an abnormality still exists and the message can be recalled to the display by the crew.

5.6 If a failure causes the display of a number of related messages (e.g. an engine failure resulting in loss of hydraulic and electrical systems) the messages, where practicable, should be shown (e.g. on a CRT) in the order in which crew action is required.

Where the display is unable to show all the resulting messages an indication should be given that messages additional to those shown exist and it must be possible for the crew to have those additional messages shown.

6 AURAL SIGNALS (Excluding Voice)

6.1 The number of different aural signals on the flight deck, including those for Warnings, Cautions, altitude alert, marker beacons etc., should be minimised and it is strongly recommended that the total should not exceed eight. (Marker beacon signals may be counted as a single system.)

6.2 Dedicated aural signals should be provided only where specified by airworthiness or operational requirements and where normal aural alerts (reference paragraph 4.1.2) cannot meet these requirements.

6.3 It is strongly recommended that aural signals are supplied both to headsets and a flight deck loudspeaker, so that the signals are audible to the crew whether they are wearing headsets (taking into account their noise attenuation characteristics) or not.

6.4 The loudness of aural signals should be set so as to ensure that they would be heard under all foreseeable operating conditions. The minimum volume achievable by any manual adjustment (if provided) of aural signals should be adequate to ensure an alert if

the level of flight deck noise subsequently increases. It is recommended that automatic volume control is provided to compensate for changing ambient noise.

6.5 Both the pitch and the temporal pattern of aural signals should be varied to make them distinctive from one another.

6.6 Some aural signals are not permitted by the requirements to be silenced except by a return to normal conditions, e.g. over speed and take-off configuration and, in some conditions, landing gear warning.

6.7 There should be only one aural signal at a time. If the possibility of two or more aural signals at the same time cannot be avoided it should be shown that each signal is clearly intelligible to the crew. The order in which the signals are presented should be that in which crew action is required.

7 GENERAL

7.1 Warnings, Cautions and Advisories, that require no crew action in a particular phase of flight, may be inhibited if it is safer to do so. Substantiation should be provided on request. However, if it occurs before entering a flight phase when it would be inhibited, the inhibition should not operate on that message.

Inhibited messages should be revealed in order of priority at the end of the inhibition phase.

7.2 The crew should be able to isolate the attention-getting device in the event of a fault in the alerting system so as to avoid continuous unwanted operation. Rearming of the alerting system before the next flight may be accomplished either –

7.2.1 Automatically, or

7.2.2 Manually if the absence of rearming is clear and unmistakable.

7.3 There should be no significant delay in an alert after the attainment of a Warning or Caution threshold unless the level of urgency and the flight phase permits it.

8 RELIABILITY AND INTEGRITY

For establishing compliance of the alerting system with CS 25.1309, both the failure to operate when required and unwanted operation should be considered –

8.1 The reliability of the alerting system should be compatible with the Safety Objectives associated with the system function for which it provides an alert. Crew alerting of certain parameters may be an Essential function. Where this is so, loss of crew alerting should be Improbable.

8.2 The alerting system should be designed to avoid false and nuisance alerts. The possible effects of a false alert should be assessed for each function and taken into account in establishing the required Safety Objectives. In addition, the occurrence rate of false and nuisance alerts should be low enough to maintain crew confidence in the alerting system.

8.3 In demonstrating compliance with paragraph 8.1 it would also be necessary to show that –

a. No probable single failure can cause the total loss of either the Warning or the Caution attention-getting means defined in 4.1.

b. If a single failure can cause the loss of the central warning and caution panel or display, adequate secondary means of identification is provided, where necessary.

c. A single failure, which could cause the loss, or failure of a system function does not also result in the loss of any associated alerting function unless the consequences are minor.

8.4 The alerting functions associated with those systems, which may be essential for continued safe flight, and landing should be available when the aircraft is operating without normal electrical power.

8.5 It should be possible to test the system to the extent necessary to comply with CS 25.1309. It should also be possible for the crew to check all alerting system indication filaments or other display devices.

[Amdt 25/2]

CS 25.1323 Airspeed indicating system

ED Decision 2003/2/RM

For each airspeed indicating system, the following apply:

(a) Each airspeed indicating instrument must be approved and must be calibrated to indicate true airspeed (at sea-level with a standard atmosphere) with a minimum practicable instrument calibration error when the corresponding pitot and static pressures are applied.

(b) Each system must be calibrated to determine the system error (that is, the relation between IAS and CAS) in flight and during the accelerated takeoff ground run. The ground run calibration must be determined –

(1) From 0·8 of the minimum value of V_1, to the maximum value of V_2, considering the approved ranges of altitude and weight; and

(2) With the wing-flaps and power settings corresponding to the values determined in the establishment of the take-off path under CS 25.111 assuming that the critical engine fails at the minimum value of V_1.

(c) The airspeed error of the installation, excluding the airspeed indicator instrument calibration error, may not exceed 3% or five knots, whichever is greater, throughout the speed range, from –

(1) V_{MO} to 1·23 V_{SR1} with wing-flaps retracted; and

(2) 1·23 VS_{R0} to V_{FE} with wing-flaps in the landing position.

(d) From 1·23 V_{SR} to the speed at which stall warning begins, the IAS must change perceptibly with CAS and in the same sense, and at speeds below stall warning speed the IAS must not change in an incorrect sense. (See AMC 25.1323(d).)

(e) From V_{MO} to V_{MO} + ⅔ (V_{DF} – V_{MO}) the IAS must change perceptibly with CAS and in the same sense, and at higher speeds up to VDF the IAS must not change in an incorrect sense. (See AMC 25.1323(e))

(f) There must be no indication of air-speed that would cause undue difficulty to the pilot during the take-off between the initiation of rotation and the achievement of a steady climbing condition.

(g) The effects of airspeed indicating system lag may not introduce significant takeoff indicated airspeed bias, or significant errors in takeoff or accelerate-stop distances.

(h) Each system must be arranged, so far as practicable, to prevent malfunction or serious error due to the entry of moisture, dirt, or other substances. (See AMC 25.1323(h).)

(i) Each system must have a heated pitot tube or an equivalent means of preventing malfunction due to icing. (See AMC to 25.1323(i) and 25.1325(b).)

(j) Where duplicate airspeed indicators are required, their respective pitot tubes must be far enough apart to avoid damage to both tubes in a collision with a bird.

AMC 25.1323(d) Airspeed indicating system

ED Decision 2003/2/RM

An acceptable means of compliance when demonstrating a perceptible speed change between 1.23 V_{SR} to stall warning speed is for the rate of change of IAS with CAS to be not less than 0.75."

AMC 25.1323(e) Airspeed indicating system

ED Decision 2003/2/RM

An acceptable means of compliance when demonstrating a perceptible speed change between V_{MO} to V_{MO} + 2/3 (V_{DF} - V_{MO}) is for the rate of change of IAS with CAS to be not less than 0.50."

AMC 25.1323(h) Airspeed indicating system

ED Decision 2003/2/RM

The design and installation of the pitot system should be such that positive drainage of moisture is provided, chafing of the tubing and excessive distortion at bends is avoided, and the lag and the possibility of moisture blockage in the tubing should be kept to an acceptable minimum.

AMC 25.1323(i) and 25.1325(b) Airspeed indicating system

ED Decision 2003/2/RM

1 Tests should be conducted to the same standard as recommended for turbine engine air intakes (see AMC 25.1093(b)(1)) unless it can be shown that the items are so designed and located as not to be susceptible to icing conditions. Ice crystal and mixed ice and water cloud will need to be considered where the system is likely to be susceptible to such conditions.

2 However, in conducting these tests due regard should be given to the presence of the aeroplane and its effect on the local concentration of the cloud.

CS 25.1325 Static pressure systems

ED Decision 2003/2/RM

(a) Each instrument with static air case connections must be vented to the outside atmosphere through an appropriate piping system.

(b) Each static port must be designed and located in such manner that static pressure system performance is least affected by airflow variation, or by moisture or other foreign matter, and that the correlation between air pressure in the static pressure system and true ambient atmospheric static pressure is not changed when the aeroplane is exposed to the continuous and intermittent maximum icing conditions defined in Appendix C. (See AMC to 25.1323(i) and 25.1325(b).)

(c) The design and installation of the static pressure system must be such that –

(1) Positive drainage of moisture is provided; chafing of the tubing and excessive distortion or restriction at bends in the tubing is avoided; and the materials used are durable, suitable for the purpose intended, and protected against corrosion; and

(2) It is airtight except for the port into the atmosphere. A proof test must be conducted to demonstrate the integrity of the static pressure system in the following manner:

(i) *Unpressurised aeroplanes*. Evacuate the static pressure system to a pressure differential of approximately 33.86 HPa, (1 inch of mercury) or to a reading on the altimeter, 305 m (1 000 ft) above the aeroplane elevation at the time of the test. Without additional pumping for a period of 1 minute, the loss of indicated altitude must not exceed 30 m (100 ft) on the altimeter.

(ii) *Pressurised aeroplanes*. Evacuate the static pressure system until pressure differential equivalent to the maximum cabin pressure differential for which the aeroplane is type certificated is achieved. Without additional pumping for a period of 1 minute, the loss of indicated altitude must not exceed 2% of the equivalent altitude of the maximum cabin differential pressure or 30 m (100 ft), whichever is greater.

(d) Each pressure altimeter must be approved and must be calibrated to indicate pressure altitude in a standard atmosphere, with a minimum practicable calibration error when the corresponding static pressures are applied.

(e) Each system must be designed and installed so that the error in indicated pressure altitude, at sea-level, with a standard atmosphere, excluding instrument calibration error, does not result in an error of more than ±9 m (±30 ft) per 185 km/hr (100 knots) speed for the appropriate configuration in the speed range between 1·23 V_{SR0} with wing-flaps extended and 1·7 V_{SR1} with wing-flaps retracted. However, the error need not be less than ±9 m (±30 ft).

(f) If an altimeter system is fitted with a device that provides corrections to the altimeter indication, the device must be designed and installed in such manner that it can be bypassed when it malfunctions, unless an alternate altimeter system is provided. Each correction device must be fitted with a means for indicating the occurrence of reasonably probable malfunctions, including power failure, to the flight crew. The indicating means must be effective for any cockpit lighting condition likely to occur.

(g) Except as provided in sub-paragraph (h) of this paragraph, if the static pressure system incorporates both a primary and an alternate static pressure source, the means for selecting one or the other source must be designed so that –

(1) When either source is selected, the other is blocked off; and

(2) Both sources cannot be blocked off simultaneously.

(h) For un-pressurised aeroplanes, sub-paragraph (g)(1) of this paragraph does not apply if it can be demonstrated that the static pressure system calibration, when either static pressure source is selected, is not changed by the other static pressure source being open or blocked.

CS 25.1326 Pitot heat indication systems

ED Decision 2003/2/RM

If a flight instrument pitot heating system is installed, an indication system must be provided to indicate to the flight crew when that pitot heating system is not operating. The indication system must comply with the following requirements:

(a) The indication provided must incorporate an amber light that is in clear view of a flight-crew member.

(b) The indication provided must be designed to alert the flight crew if either of the following conditions exist:

(1) The pitot heating system is switched 'off'.

(2) The pitot heating system is switched 'on' and any pitot tube heating element is inoperative.

CS 25.1327 Direction Indicator

ED Decision 2003/2/RM

(a) Each magnetic direction indicator must be installed so that its accuracy is not excessively affected by the aeroplane's vibration or magnetic fields.

(b) The magnetic direction indicator required by CS 25.1303(a)(3) may not have a deviation, after compensation, in normal level flight, greater than 10 degrees on any heading.

(c) Direction indicators required by CS 25.1303(b)(6) must have an accuracy adequate for the safe operation of the aeroplane.

AMC 25.1327 Direction Indicator

ED Decision 2003/2/RM

This AMC addresses the accuracy of stabilised magnetic heading systems, required for safe operation of the aeroplane. These systems include means to compensate or correct for errors induced by stable magnetic effects in the aeroplane. Additional effects due to electromagnetic transients and configuration changes are not normally "compensated" by the magnetic heading system and are also included in this AMC.

Should the correction become unavailable (either intentionally or unintentionally), the effects of the resulting heading indication should be considered for safe operation of the aeroplane. This AMC addresses the condition where correction is available and the condition where correction is not available (or failed).

In most circumstances, heading information is not directly used as the primary means of navigation. This condition should permit the applicant to show that the accuracy adequate for the safe operation of the aeroplane may be different than what is defined in this AMC.

1. After correction the cumulative deviation on any heading should not exceed 5°, based on the following:

   a. A change in deviation due to the equipment of the heading system components, the total of which should not exceed 2°.

   b. A change in deviation due to the current flow in any item of electrical equipment and its associated wiring is permissible, but should not exceed 1°. The total cumulative effect for all combinations of equipment, with all combinations of electrical load, should not exceed 2°.

   c. A change in deviation due to the movement of any component, (e.g. controls or undercarriage) in normal flight is permissible, but should not exceed 1°.

2. If correction fails or is not available, the change in deviation due to the proximity of all equipment containing magnetic material should not exceed 2°.

3. For magnetic heading indications obtained via geographic (true) heading, the accuracy of the heading indication should account for the accuracy of the magnetic variation data based on geographic position. This variation may change over time.

   Acceptable accuracy values have been found to be:

   2 degrees (Latitudes between 50°S and 50°N)

   3 degrees (Latitudes between 50°N and 73°N)

   3 degrees (Latitudes between 50°S and 60°S)

   5 degrees (Latitudes between 73°N and 79°N)

   8 degrees (Latitudes between 79°N and 82°N)

   The applicant may propose different accuracy values after consultation with the EASA.

   In areas of known magnetic unreliability (e.g. the magnetic poles), the magnetic variation error can be very large, so the magnetic heading indications (if output) should not be relied upon.

4. For geographic (true) heading indications (such as those provided by Inertial Reference Units), the accuracy should be better or equal to 1°.

5. For standby compass instruments, the accuracy of the magnetic heading indications after correction should be better or equal to 10°.

   Note: On aeroplanes with a short cruising range, the above limits may be extended after consultation with EASA. For aeroplanes that do not depend on direction or heading information for navigation (VOR, ILS, FMS, GPS), the above limits may be extended after consultation with EASA.

CS 25.1329 Automatic pilot system

ED Decision 2003/2/RM

(a) Each automatic pilot system must be approved and must be designed so that the automatic pilot can be quickly and positively disengaged by the pilots to prevent it from interfering with their control of the aeroplane.

(b) Unless there is automatic synchronisation, each system must have a means to readily indicate to the pilot the alignment of the actuating device in relation to the control system it operates.

(c) Each manually operated control for the system must be readily accessible to the pilots.

(d) Quick release (emergency) controls must be on both control wheels, on the side of each wheel opposite the throttles.

(e) Attitude controls must operate in the plane and sense of motion specified in CS 25.777(b) and 25.779(a) for cockpit controls. The direction of motion must be plainly indicated on, or adjacent to, each control.

(f) The system must be designed and adjusted so that, within the range of adjustment available to the human pilot, it cannot produce hazardous loads on the aeroplane, or create hazardous deviations in the flight path, under any condition of flight appropriate to its use, either during normal operation, or in the event of a malfunction, assuming that corrective action begins within a reasonable period of time.

(g) If the automatic pilot integrates signals from auxiliary controls or furnishes signals for operation of other equipment, there must be positive interlocks and sequencing of engagement to

prevent improper operation. Protection against adverse interaction of integrated components, resulting from a malfunction, is also required.

(h) Means must be provided to indicate to the flight crew the current mode of operation and any modes armed by the pilot. Selector switch position is not acceptable as a means of indication.

(i) A warning must be provided to each pilot in the event of automatic or manual disengagement of the automatic pilot. (See CS 25.1322 and AMC 25.1322.)

AMC 25.1329 Automatic Pilot

ED Decision 2003/2/RM

INTRODUCTION

CS 25.1329 and this AMC apply to basic automatic pilot certification. For automatic pilots, which are capable of automatic landing or are to be used in precision approaches with a decision height below 60 m (200 ft), supplementary airworthiness requirements apply (see CS-AWO).

1 *General*

1.1 For the purpose of this AMC the term 'automatic pilot' includes the sensors, computers, power supplies, servo-motors/actuators and associated wiring, necessary for its function. It includes any indications and controllers necessary for the pilot to manage and supervise the system.

1.2 Any part of the automatic pilot, which remains connected to the primary flight controls when the automatic pilot is not in use, is regarded as a part of the primary flight controls and the provisions for such systems are applicable.

1.3 In showing compliance with CS 25.395(b), servo-motors, their mountings and their connection to the flight control system should have limit and ultimate factors of safety of not less than 1·0 and 1·5 respectively, with the maximum loads which can be imposed by the automatic pilot, or by the flight control system (up to its design load).

1.4 Adequate precautions should be taken in the design process and adequate procedures should be specified in the maintenance manual to prevent the incorrect installation, connection or adjustment of parts of the automatic pilot if such errors would hazard the aeroplane (e.g. torque clutches or limit switches with a range of adjustment such that maladjustment could be hazardous).

1.5 The response of the automatic pilot should be considered in showing compliance with the structural requirements of CS-25 Subparts C and D.

1.6 The automatic pilot should be so designed and installed that the tolerances demonstrated during certification tests can be maintained in service.

1.7 The automatic pilot should not cause sustained nuisance oscillations, undue control activity or sudden large attitude changes, especially when configuration or power changes are taking place.

1.8 When automatic functions are provided which may be used with the automatic pilot (e.g. automatic throttle control or yaw damper, etc.) and use of the automatic pilot is permitted with any of these functions inoperative, it should comply with the provisions of this AMC with these functions operative and inoperative.

1.9 Operating procedures for use with the automatic pilot should be established. (See CS 25.1585(a) and (b).)

1.10 In addition to the quick release controls of CS 25.1329(d), in order to show compliance with CS 25.1309 an alternative means of disengagement, readily accessible in flight, should be provided.

1.11 It should be possible to disengage the automatic pilot at any time without unacceptable out-of-trim forces.

2 *Performance of Function*

2.1 The automatic pilot should be demonstrated to perform its intended function in all configurations in which it may be used throughout all appropriate manoeuvres and environmental conditions, including turbulence, unless an appropriate operating limitation or statement is included in the aeroplane Flight Manual. All manoeuvres should be accomplished smoothly, accurately and without sustained nuisance oscillation. This demonstration should be conducted with system tolerances at the lower limits of automatic pilot authority.

NOTE: The acceptability of the performance may be based on subjective judgement taking into account the experience acquired from similar equipment and the general behaviour of the aeroplane. The acceptable performance may vary according to aeroplane type and model.

2.2 If the automatic pilot is to be approved for ILS or MLS approaches, a series of approaches should be made in the normal approach configuration(s) to the Minimum Use Height (MUH) (see paragraph 5.3.4). These approaches should be made in conditions chosen to show that the performance is satisfactory within permitted extremes such as weight, centre of gravity position, wind speed, capture angle and range. Unless otherwise justified, performance should be demonstrated on at least two facilities of each type of approach system, which is to be certificated for use with the automatic pilot. To cover this range of conditions, it can be expected that in the order of 15 approaches will be needed. In the event that the performance is not satisfactory down to the MUH established in accordance with paragraph 5.3.4, then the Flight Manual should specify an MUH at which the performance is satisfactory. (An approach is considered to be satisfactory if it is stable without large deviations from the intended path or speed during the approach and, at the MUH, the position and velocities of the aeroplane are such that a safe landing can readily be made.)

2.3 If approval is sought for ILS or MLS approaches initiated with one engine inoperative and the aeroplane trimmed at glide path intercept, the automatic pilot should be capable of conducting the approach without further manual trimming.

3 *Controls, Indicators and Warnings*

3.1 The controls, indicators and warnings should be so designed as to minimise crew errors. Mode and malfunction indications should be presented in a manner compatible with the procedures and assigned tasks of the flight crew. The indications should be grouped in a logical and consistent manner and be visible from each pilot's station under all expected lighting conditions.

3.2 The means provided to comply with CS 25.1329(h) should also give an appropriate indication when there is –

a. Failure to achieve the selected mode; and

b. Inadvertent change or disengagement of a mode.

4 *Characteristics of Some Specific Modes*

4.1 Automatic Acquisition of Altitude Hold Mode. Where the automatic pilot has the ability to acquire and maintain a pre-selected altitude it should be shown in particular that –

a. If the pilot fails to advance the throttles following an altitude acquisition from a descent, the aeroplane exhibits no hazardous characteristics if recovery action is taken within a reasonable period after the onset of stall warning, or other appropriate warning;

NOTE: Compliance with this provision need not be demonstrated if adequate means are provided to prevent such an error.

b. Resetting the datum pressure or the selected altitude at any time during altitude acquisition does not result in a hazardous manoeuvre.

4.2 *Go-around Mode*. Where the automatic pilot has the ability to carry out an automatic go-around –

a. The speed should be compatible with that used for a manually controlled go-around; it should not be less than the higher of 1·13 V_{SR} or the appropriate minimum control speed (see CS 25.149);

b. The control actions and flight path during the initial rotation should not be significantly different from those of a manually controlled go-around;

c. Flight path control following an engine failure during go-around should not require exceptional piloting skill or alertness; and

d. Any failure condition that causes the automatic pilot to fail to initiate the go-around without a warning appropriate to the approved use of the system, should be assessed as Extremely Remote.

4.3 *Control Wheel Steering Mode (CWS)*. Where the pilot has the ability to make inputs to the automatic pilot by movement of the normal control wheel (control wheel steering) –

a. It should be possible for the pilot to overpower the automatic pilot and to achieve the maximum available control surface deflection without using forces so high that the controllability requirements of CS 25.143(c) are not met;

b. The maximum bank and pitch attitudes, which can be achieved without overpowering the automatic pilot, should be limited to those necessary for the normal operation of the aeroplane;

NOTE: Typically ± 35° in roll +20° to –10° in pitch.

c. It should be possible to perform all normal manoeuvres smoothly and accurately without nuisance oscillation. It should be possible also to counter all normal changes of trim due to change of configuration or power, within the range of flight conditions in which control wheel steering may be used, without encountering excessive discontinuities in control force which might adversely affect the flight path;

d. The stall and stall recovery characteristics of the aeroplane should remain acceptable. It should be assumed that recovery is made with CWS in use unless automatic disengagement of the automatic pilot is provided;

e. In showing compliance with CS 25.143(f) account should be taken of such adjustments to trim as may be carried out by the automatic pilot in the course of manoeuvres, which can reasonably be expected. Some alleviation may be

acceptable in the case of unusually prolonged manoeuvres provided the reduced control forces would not be hazardous;

f. If the use of this mode for take-off and landing is to be permitted it should be shown that –

i. Sufficient control, both in amplitude and rate is available without encountering force discontinuities;

ii. Reasonable mishandling is not hazardous (e.g. engaging the automatic pilot while the elevators or ailerons are held in an out-of-trim position); and

iii. Runaway rates and control forces are such that the pilot can readily overpower the automatic pilot with no significant deviation in flight path;

iv. Any lag in aircraft response induced by the CWS mode is acceptable for the intended manoeuvre.

g. It should not be possible to revert to the CWS mode by applying a force to the control column or wheel unless the autopilot is in a capture mode (e.g. altitude capture, localizer capture). When the force is released the autopilot should return to the previously engaged capture mode or to the track mode.

5 *Failure Conditions*

5.1 *Analysis*

5.1.1 An analysis should be carried out to define the Failure Conditions and their Effects and to show that the probability of each Failure Condition is such that the provisions of paragraph 5.2 are achieved. The depth of the analysis may be significantly reduced and numerical probability analysis may not be required in the case of a single-channel automatic pilot if worst-case failures can be easily identified and used as the basis of a ground and flight test demonstration programme (e.g. where the effect of a failure is limited by an independent device whose serviceability is frequently checked).

5.1.2 When the failure of a device can remain undetected in normal operation, the frequency with which the device is checked will directly influence the probability that such a failure is present on any particular occasion. This should be taken into account when assessing the probabilities of any Failure Conditions, which include dormant failures in the monitoring devices or in other unchecked parts of the system (see paragraph 5.1.6).

5.1.3 When the failure of a component or equipment can be expected to result in other failures, then these further failures should be taken into account in the analysis. In assessing which further failures may occur, consideration should be given to any change in the equipment operating conditions for other components or equipment resulting from the first failure.

5.1.4 In considering damage from external sources, account should be taken of the location of the equipment in the aeroplane and other features of the installation.

5.1.5 Attention should be given in the analysis to common mode failures (i.e. multiple failures arising from a single cause). The following are examples:

a. A local fire causing multiple fractures;

b. Electromagnetic interference or electrical transients causing multiple malfunctions;

c. Mechanical vibration causing multiple failures or malfunctions;

d. Leakage of water or other liquids (e.g. from galley, lavatories or cargo) causing multiple electrical failures;

e. The failure of a cooling system or the leakage of hot air causing multiple failures in other systems;

f. Lightning strike; and

g. Engine failure.

5.1.6 When exposure times relevant to failure probability calculations are dependent on flight crew and maintenance checks (i.e. pre-flight, first flight of the day, pre-land etc.) and/or inspection intervals for dormant (latent) failures, these tasks, time intervals and the recommended component monitoring programme should be clearly specified in the certification documentation, and made available for the purposes of scheduling flight crew and maintenance procedures.

5.2 *Acceptability of Failure Conditions*

5.2.1 Any Failure Condition occurring within the normal flight envelope should be assessed as Extremely Improbable if its effect is one of the following:

a. A load on any part of the primary structure sufficient to cause a catastrophic structural failure;

b. Catastrophic loss of flight path control;

c. Exceedance of V_{DF}/M_{DF}; or

d. Catastrophic flutter or vibration.

5.2.2 Any Failure Condition occurring within the normal flight envelope should be assessed as Extremely Remote if its effect is one of the following:

a. A load on any part of the structure greater than its limit load;

b. Exceedance of airspeed halfway between V_{MO} and V_{DF} or a Mach number halfway between M_{MO} and M_{DF};

c. A stall;

d. A normal acceleration less than a value of 0 g;

e. Bank angles of more than 60° en route or more than 30° below a height of 305 m (1000 ft). If the MUH is below 30m (100 ft), the bank angle exceedance limit should be reduced to a value, which takes account of the size of the aeroplane and its handling characteristics;

f. Hazardous degradation of the flying qualities of the aeroplane;

g. Hazardous height loss in relation to minimum permitted height for automatic pilot use (see paragraph 5.3); or

h. Engagement or disengagement of a mode leading to hazardous consequences.

5.2.3 Any Failure Condition for which the probability of occurrence is assessed as Remote should have an appropriately less severe effect than those listed in paragraph 5.2.2.

5.2.4 Compliance with the requirements of paragraphs 5.2.1, 5.2.2 and 5.2.3 should be shown by ground simulation, flight tests or suitable analysis. Where appropriate, account should be taken of pilot recognition of the Failure Condition, and any subsequent recovery action taken. The limiting values given in paragraph 5.2.2 should not be exceeded either during any manoeuvre caused by the failure or during the recovery by the pilot. The minimum heights at which the automatic pilot may be used should be determined.

5.2.5 The most critical of the Failure Conditions which are not assessed as Extremely Remote or Extremely Improbable should be demonstrated in flight test (see paragraph 5.3). Failure Conditions, which are assessed as Extremely Remote, may be demonstrated by a ground simulation or analysis, which has been suitably validated, using the same procedures as are specified in paragraph 5.3 for flight test.

5.3 *Flight Demonstrations*. When demonstrating compliance with paragraph 5.2 by means of flight test, the following procedures should be used:

5.3.1 *General*

a. Failure Conditions of the automatic pilot including, where appropriate, multi-axis failures and automatic-trim failures, should be simulated in such a manner as to represent the overall effect of each Failure Condition about all axes.

b. Following recognition of the Failure Condition b the pilot, a delay, as specified in paragraphs 5.3.2, 5.3.3, 5.3.4 and 5.3.5 should be applied before the commencement of recovery action. Following such delay the pilot should be able to return the aeroplane to its normal flight attitude under full manual control without engaging in any dangerous manoeuvres during recovery and without control forces exceeding the values given in CS 25.143(c). During the recovery the pilot may overpower the automatic pilot or disengage it. For the purpose of determining the minimum height at which the autopilot may be used during an approach, a normal acceleration of the order of 1·5 g should be applied. Such an acceleration should not lead to an unsafe speed excursion during the manoeuvre to resume a normal flight path.

c. System authority should be set at the most adverse tolerance limits unless an analysis shows that they have no significant effect and the flight conditions should be the most critical which is appropriate (centre of gravity, weight, flap setting, altitude, speed, power or thrust).

d. In malfunction tests described in paragraphs 5.3.2, 5.3.3, 5.3.4 and 5.3.5 the recognition point should be that at which a pilot in service operation in non-visual conditions may be expected to recognise the need to take action and not that at which the test pilot engaged in the flight trials does so. Recognition of the malfunction may be through the behaviour of the aeroplane or an appropriate failure warning system and the recognition point should be identified. Control column or wheel movements alone should not be used for recognition. The recognition time should not

normally be less than 1 second. If a recognition time of less than 1 second is claimed, specific justification will be required (e.g. additional tests to ensure that the time is representative in the light of the cues available to the pilot).

e. If any auto throttle system is installed, the tests should be performed with the auto throttle system engaged or disengaged whichever is the more adverse case.

f. For control wheel steering, in those phases of flight where the pilot is exercising manual control (e.g. take-off, landing) the delay times specified in paragraphs 5.3.2, 5.3.3, and 5.3.5 need not be applied.

The pilot may commence recovery action at the recognition point. (See also paragraph 4.3 f.)

g. The aeroplane should be so instrumented that the parameters appropriate to the test are recorded (e.g. normal acceleration, airspeed, height, pitch and roll angles, automatic pilot engagement state). The fitment of the instrumentation should not affect the behaviour of the automatic pilot or any other system.

5.3.2 *Climb, Cruise, Descent and Holding*

a. Recovery action should not be initiated until three seconds after the recognition point.

b. The MUH for the automatic pilot in climb, cruise, descent or holding should not be less than 305 m (1000 ft), unless the height loss is determined under the conditions for which use of the automatic pilot is requested. In that case the MUH should not be less than twice the height loss. The height loss is measured as the difference between the height at the time the malfunction is induced to the lowest height in the recovery manoeuvre.

5.3.3 *Manoeuvring Flight*

a. Recovery action should not be initiated until one second after the recognition point.

b. Malfunctions should be induced in turns at the maximum bank angles for normal operation.

5.3.4 Approach Coupled to an ILS or MLS vertical guidance

a. The aircraft should be flown down the glide path in the configuration and at the approach speed specified. Simulated automatic pilot malfunctions should be induced at critical points during the approach, taking into consideration all possible design variations in automatic pilot system sensitivity and authority. In general, malfunction demonstrations may be restricted to hard-overs (and possibly automatic-trim failures) unless an MUH below 30m (100 ft) is requested, when runaways at lower rates should also be investigated.

b. A 3° glide path should be used.

c. The aeroplane should be so instrumented that the following information is recorded:

i. The path of the aeroplane with respect to the normal glide path;

ii. The point along the glide path when the simulated malfunction is induced;

iii. The point where the pilot indicates recognition of the malfunction; and

iv. The point along the path of the aeroplane where the recovery action is initiated.

d. Recoveries from malfunction should simulate non-visual conditions with a one-second-time delay between recognition point and initiation of recovery.

e. The MUH should be determined as the height of the aeroplane wheels at the point where recovery from the failure is initiated when the path of the aeroplane wheels during the recovery manoeuvre is tangent to the runway or to a 1:29 slope line drawn from a point 4.6 m (15 ft) above the runway threshold (See Figure 1). If there is no automatic landing capability, the MUH should not be less than 15m (50 ft).

f. An engine failure should not cause a heading change at a rate greater than three degrees per second averaged over a five second period, or produce hazardous attitudes (see also paragraph 5.2.2 e.). In showing compliance with this, manual retrimming of the aeroplane is not permitted.

5.3.5 *Approach not coupled to ILS or MLS vertical guidance*

a. The procedure described in paragraphs 5.3.4 a. to f. should be applied.

b. A descent path of three degrees should be used unless the automatic pilot is to be approved for significantly steeper descents.

c. The MUH for the automatic pilot should not be less than twice the height loss, where the height loss is measured as described in paragraph 5.3.2 b.

5.3.6 *Failure to disengage*. Unless failure of the automatic pilot to disengage during the approach when the pilot operates the quick release control on the control wheel is assessed as Extremely Remote it should be demonstrated that the pilot could control the aeroplane manually without operating any of the other disengagement controls.

5.3.7 *Automatic Pilot Engagement below 305 m (1000 ft) after Take-Off*

a. The minimum altitude at which the automatic pilot may be engaged should be the greatest of the following:

i. The altitude at which, in an all-engines take-off at the WAT limit using the AFM procedures, the aeroplane response and recovery manoeuvre resulting from the worst case nose down hardover does not penetrate the net flight path as defined in CS 25.115.

ii. The altitude at which, in an all-engines take-off at the WAT limit using the AFM procedures, the aeroplane has reached an airspeed so that the manoeuvre resulting from the worst case nose up hardover does not result in an unsafe speed in the whole manoeuvre – including the pilot recovery.

iii. The altitude at which the stall identification system (e.g. stick pusher) is armed (if installed).

iv. The altitude at which the practicability of crew procedures to engage the autopilot has been demonstrated.

b. The automatic pilot should not command, in response to the loss of an engine, a manoeuvre resulting in an unsafe attitude such that the pilot, without using exceptional skill or strength, cannot safely take over control of the aeroplane.

c. Roll hardovers should be shown to comply with paragraph 5.2.2 e.

d. It is assumed that the pilot will be attentive to aeroplane manoeuvres at low altitudes before flap retraction. A delay time of one second after recognition of the malfunction should be used prior to the pilot taking corrective action.

5.4 *Oscillatory tests*

5.4.1 An investigation should be made to determine the effects of an oscillatory signal of sufficient amplitude to saturate the servo amplifier of each device that can move a control surface unless such a malfunction is assessed as Extremely Improbable. The investigation should cover the range of frequencies, which can be induced by a malfunction of the automatic pilot and systems functionally connected to it, including an open circuit in a feed-back loop. The investigated frequency range should include the highest frequency, which results in apparent movement of the system driving the control surface to the lowest elastic or rigid body response frequency of the aeroplane. Frequencies less than 0·2 Hz may, however, be excluded from consideration. The investigation should also cover the normal speed and configuration ranges of the aeroplane. The results of this investigation should show that the peak loads imposed on the parts of the aeroplane by the application of the oscillatory signal are within the limit loads for these parts.

5.4.2 The investigation may be accomplished largely through analysis with sufficient flight data to verify the analytical studies or largely through flight tests with analytical studies extending the flight data to the conditions, which impose the highest percentage of limit, load to the parts.

5.4.3 When flight tests are conducted in which the signal frequency is continuously swept through a range, the rate of frequency change should be slow enough to permit determining the amplitude of response of any part under steady frequency oscillation at any critical frequency within the test range.

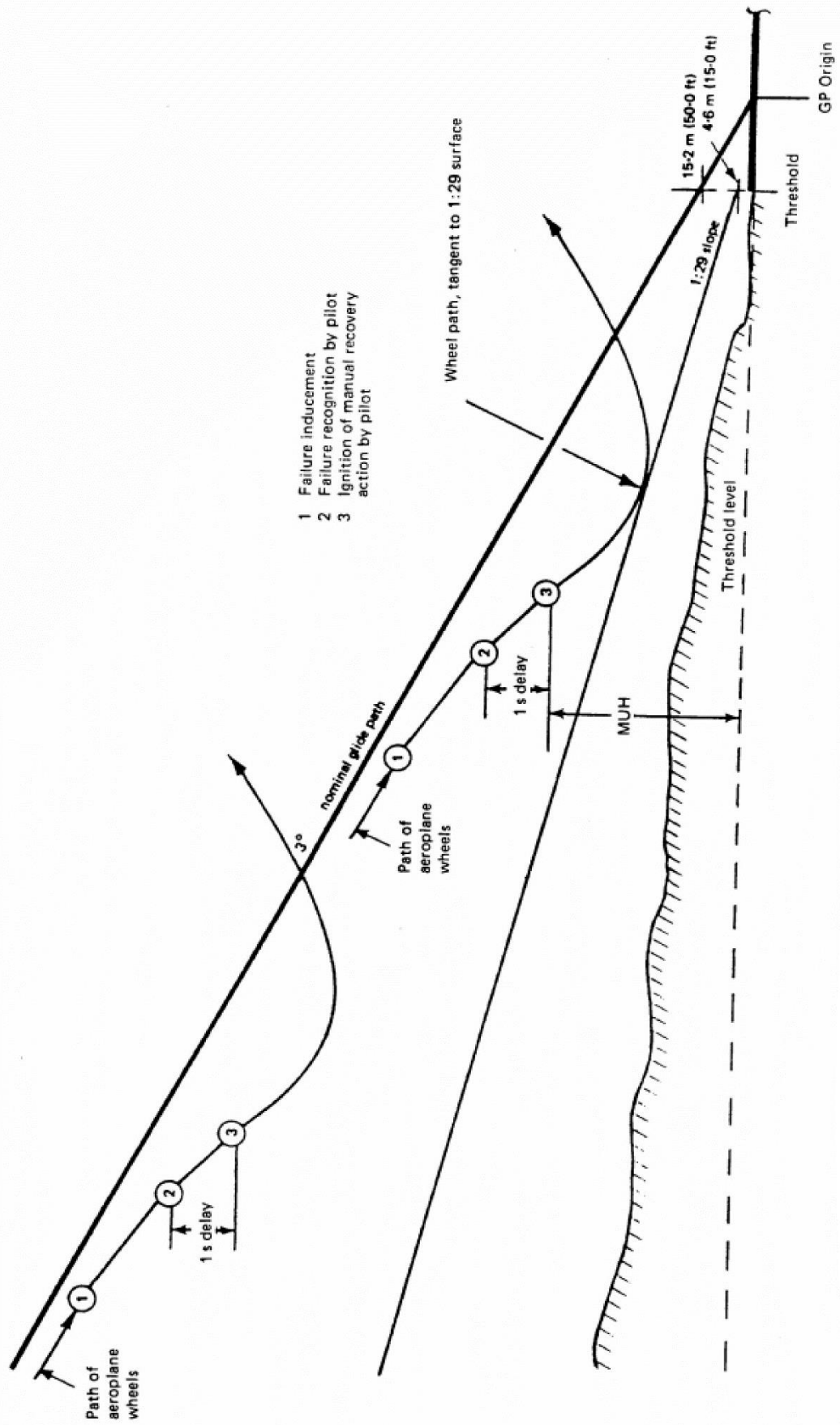

Figure 1 - Deviation profile method for determining minimum height at which the automatic pilot may be used (MUH) on an ILS or MLS Coupled Approach

CS 25.1331 Instruments using a power supply

ED Decision 2003/2/RM

(a) For each instrument required by CS 25.1303(b) that uses a power supply, the following apply:

(1) Each instrument must have a visual means integral with the instrument, to indicate when power adequate to sustain proper instrument performance is not being supplied. The power must be measured at or near the point where it enters the instruments. For electric instruments, the power is considered to be adequate when the voltage is within approved limits.

(2) Each instrument must, in the event of the failure of one power source, be supplied by another power source. This may be accomplished automatically or by manual means. The failure of one power source must not affect the same instrument of both pilot stations.

(3) If an instrument presenting flight and/or navigation data receives information from sources external to that instrument and loss of that information would render the presented data unreliable, a clear and unambiguous visual warning must be given to the crew when such loss of information occurs that the presented data should not be relied upon. The indication must be incorporated in the instrument.

(b) As used in this paragraph, 'instrument' includes devices that are physically contained in one unit, and devices that are composed of two or more physically separate units or components connected together (such as a remote indicating gyroscopic direction indicator that includes a magnetic sensing element, a gyroscopic unit, an amplifier, and an indicator connected together).

CS 25.1333 Instrument systems

ED Decision 2003/2/RM

(a) For systems that operate the instruments required by CS 25.1303(b), which are located at each pilot's station, means must be provided to connect the required instruments at the first pilot's station to operating systems, which are independent of the operating systems at other flight crew stations, or other equipment.

(b) Equipment, systems, and installations must be designed so that sufficient information is available to assure control of the aeroplane in airspeed, altitude, direction and attitude by one of the pilots without additional flight crew action after any single failure or combination of failures that is not assessed to be extremely improbable (see AMC 25.1333(b)); and

(c) Additional instruments, systems, or equipment may not be connected to the operating systems for the instruments required by CS 25.1303(b), unless provisions are made to ensure the continued normal functioning of the required instruments in the event of any malfunction of the additional instruments, systems, or equipment which is not shown to be extremely improbable.

AMC 25.1333(b) Instruments systems

ED Decision 2003/2/RM

1. *Attitude displays systems.* If three displays are used to show compliance with CS 25.1333(b), the reliability and independence of those displays should be confirmed by a suitable assessment in accordance with CS 25.1309. Each display should have independent sensors and power supplies. If a total failure of the generated electrical power causes the loss of both main instruments, the power supply to the third (standby) attitude indicator and its appropriate lighting should be

such that the display is usable from each pilot's station for a time duration in accordance with AMC 25.1351(d).

Note: the time for which the display remains usable will be stated in the Aeroplane Flight Manual (AFM).

2. *Airspeed, altitude, and direction display systems.* The reliability and independence of the displays used to show compliance with CS 25.1333(b) should be sufficient to ensure continued safe flight and landing appropriate to the intended operation of the aeroplane.

Historically, "sufficient information" to control attitude, airspeed, altitude, and direction has been provided by specific indicators of the state of each parameter. However, since control is considered to be the ability to change or maintain a given parameter to a desired value, it is assumed that these parameters will be available without flight crew action.

There may be alternate parameters in the cockpit that provide equivalent means to control attitude, airspeed, altitude and direction, without displaying those parameters directly (for example, without display of standby airspeed, by using a suitable angle-of-attack display). For these alternate cases, compliance to CS 25.1333(b) must be shown by analysis and flight test.

CS 25.1335 Flight director systems

ED Decision 2003/2/RM

Means must be provided to indicate to the flight crew the current mode of operation and any modes armed by the pilot. Selector switch position is not acceptable as a means of indication.

CS 25.1337 Powerplant instruments

ED Decision 2003/2/RM

(a) Instruments and instrument lines

(1) Each powerplant instrument line must meet the requirements of CS 25.993 and CS 25.1183.

(2) Each line carrying flammable fluids under pressure must –

(i) Have restricting orifices or other safety devices at the source of pressure to prevent the escape of excessive fluid if the line fails; and

(ii) Be installed and located so that the escape of fluids would not create a hazard.

(3) Each powerplant instrument that utilises flammable fluids must be installed and located so that the escape of fluid would not create a hazard.

(b) *Fuel quantity indicator*. There must be means to indicate to the flight-crew members, the quantity, in litres, (gallons), or equivalent units, of usable fuel in each tank during flight. In addition –

(1) Each fuel quantity indicator must be calibrated to read 'zero' during level flight when the quantity of fuel remaining in the tank is equal to the unusable fuel supply determined under CS 25.959;

(2) Tanks with interconnected outlets and airspaces may be treated as one tank and need not have separate indicators; and

(3) Each exposed sight gauge, used as a fuel quantity indicator, must be protected against damage.

(c) *Fuel flow meter system*. If a fuel flow meter system is installed, each metering component must have a means for bypassing the fuel supply if malfunction of that component severely restricts fuel flow.

(d) *Oil quantity indicator*. There must be a stick gauge or equivalent means to indicate the quantity of oil in each tank. If an oil transfer or reserve oil supply system is installed, there must be a means to indicate to the flight crew, in flight, the quantity of oil in each tank.

(e) *Turbo-propeller blade position indicator.* Required turbo-propeller blade position indicators must begin indicating before the blade moves more than 8° below the flight low pitch stop. The source of indication must directly sense the blade position.

ELECTRICAL SYSTEMS AND EQUIPMENT

CS 25.1351 General

ED Decision 2003/2/RM

(a) *Electrical system capacity*. The required generating capacity, and number and kinds of power sources must –

(1) Be determined by an electrical load analysis; and

(2) Meet the requirements of CS 25.1309.

(b) *Generating system*. The generating system includes electrical power sources, main power busses, transmission cables, and associated control, regulation, and protective devices. It must be designed so that –

(1) Power sources function properly when independent and when connected in combination;

(2) No failure or malfunction of any power source can create a hazard or impair the ability of remaining sources to supply essential loads;

(3) The system voltage and frequency (as applicable) at the terminals of all essential load equipment can be maintained within the limits for which the equipment is designed, during any probable operating condition;

(4) System transients due to switching, fault clearing, or other causes do not make essential loads inoperative, and do not cause a smoke or fire hazard;

(5) There are means accessible where necessary, in flight, to appropriate crew members for the individual and rapid disconnection of each electrical power source (see AMC 25.1351(b)(5)); and

(6) There are means to indicate to appropriate crew members the generating system quantities essential for the safe operation of the system, such as the voltage and current supplied by each generator (see AMC 25.1351(b)(6)).

(c) *External power*. If provisions are made for connecting external power to the aeroplane, and that external power can be electrically connected to equipment other than that used for engine starting, means must be provided to ensure that no external power supply having a reverse polarity, a reverse phase sequence (including crossed phase and neutral), open circuit line, incorrect frequency or voltage, can supply power to the aeroplane's electrical system.

(d) *Operation without normal electrical power.* (See AMC 25.1351(d).) The following apply:

(1) Unless it can be shown that the loss of the normal electrical power generating system(s) is Extremely Improbable, alternate high integrity electrical power system(s), independent of the normal electrical power generating system(s), must be provided to power those services necessary to complete a flight and make a safe landing.

(2) The services to be powered must include –

(i) Those required for immediate safety and which must continue to operate following the loss of the normal electrical power generating system(s), without the need for flight crew action;

(ii) Those required for continued controlled flight; and

(iii) Those required for descent, approach and landing.

(3) Failures, including junction box, control panel or wire bundle fires, which would result in the loss of the normal and alternate systems must be shown to be Extremely Improbable.

AMC 25.1351(b)(5) Generating System

ED Decision 2003/2/RM

1 The disconnect means required by CS 25.1351(b)(5) should be accessible to the appropriate flight-crew members in their normal seated positions.

2 The power source controls should be considered as cockpit controls and therefore also comply with CS 25.777.

3 It may not be necessary to provide disconnection controls for all power sources, for example RAT generators or engine control dedicated generators. Where it is necessary to isolate the alternate power source when normal generator power is restored, such isolation should be possible.

AMC 25.1351(b)(6) Generating System

ED Decision 2003/2/RM

Each source of electrical supply (e.g. generators and batteries) should be provided with means to give the flight crew immediate warning of the failure of its output. These warning means are additional to the system indication requirements of CS 25.1351(b)(6). For multiphase systems the warning should also indicate the loss of any phase.

AMC 25.1351(d) Operation without Normal Electrical Power

ED Decision 2003/2/RM

1 Provision should be made to ensure adequate electrical supplies to those services, which are necessary to complete the flight and make a safe landing in the event of a failure of all normal generated electrical power. All components and wiring of the alternate supplies should be physically and electrically segregated from the normal system and be such that no single failure, including the effects of fire, the cutting of a cable bundle, the loss of a junction box or control panel, will affect both normal and alternate supplies.

2 When ensuring the adequacy of electrical supplies relative to alternate power source duration and integrity, special consideration should be given to aeroplanes such as those with fly-by-wire, for which the total loss of electrical supplies could result in an immediate loss of control.

3 In considering the services which should remain available following the loss of the normal generated electrical power systems, consideration should be given to the role and flight conditions of the aeroplane and the possible duration of flight time to reach an airfield and make a safe landing.

4 The services required by CS 25.1351(d)(1) may differ between aeroplane types and roles and should be agreed with the Agency. These should normally include –

a. Attitude information;

b. Radio communication and intercommunication;

c. Navigation;

d. Cockpit and instrument lighting;

e. Heading, airspeed and altitude, including appropriate pitot head heating;

f. Adequate flight controls;

g. Adequate engine control; and

Restart capability with critical type fuel (from the standpoint of flame-out and restart capability) and with the aeroplane initially at the maximum certificated altitude;

h. Adequate engine instrumentation;

i. Such warning, cautions and indications as are required for continued safe flight and landing;

j. Any other services required for continued safe flight and landing.

5 Consideration should also be given to the equipment and the duration of services required to make a controlled descent and forced landing in the event of failure and inability to restart all engines.

6 *Alternate Power Source Duration and Integrity*

6.1 *Time Limited*. Where an alternate power source provided to comply with CS 25.1351(d) is time limited (e.g. battery), the required duration will depend on the type and role of the aeroplane. Unless it can be shown that a lesser time is adequate, such a power source should have an endurance of at least 60 minutes, at least 30 minutes of which is available under IMC. An endurance of less than 30 minutes under IMC would not normally be acceptable. The endurances, with any associated procedures, should be specified in the Flight Manual. The endurance time should be determined by calculation or test, due to allowance being made for –

a. Delays in flight crew recognition of failures and completion of the appropriate drill where flight crew action is necessary. This should be assumed to be 5 minutes provided that the failure warning system has clear and unambiguous attention-getting characteristics and where such a delay is acceptable and compatible with the crew's primary attention being given to other vital actions.

b. The minimum voltage acceptable for the required loads, the battery state of charge, the minimum capacity permitted during service life and the battery efficiency at the discharge rates and temperatures likely to be experienced. Unless otherwise agreed, for the purpose of this calculation, a battery capacity at normal ambient conditions of 80% of the nameplate rated capacity, at the one-hour rate, and a 90% state of charge, may be assumed (i.e. 72% of nominal demonstrated rated capacity at +20°C). The allowance for battery endurance presumes that adequate requirements for periodic battery maintenance have been agreed.

c. For those aeroplanes where the battery is also used for engine or APU starting on the ground, it should be shown that following engine starts, the charge rate of the battery is such that the battery is maintained in a state of charge that will ensure adequate alternate power source duration should a failure of generated power occur shortly after take-off.

NOTE: This may normally be achieved by ensuring that, following battery-powered starting, the battery charge current has fallen to a declared level prior to take-off.

d. For those aeroplanes where the battery is used for in-flight starting of the engines or APU, it may be necessary to include limitations on the number of attempted starts, or to provide a separate dedicated battery for such purposes.

6.2 *Non-Time Limited*. Where an alternate electrical supply is provided by a non time limited source, e.g. APU, ram air turbine, pneumatic or hydraulic motor, due account should be taken of any limitation imposed by aeroplane speed, attitude, altitude etc., which may affect the capabilities of that power source. In considering the power source, account should be taken of the following:

a. *Auxiliary Power Unit (APU).* An APU capable of continuous operation throughout an adequate flight envelope may be considered an acceptable means of supplying electrical power to the required services provided that its air start capability is adequate and may be guaranteed. Where, however the APU is dependent for its starting current on a battery source, which is supplying critical loads, such starting loads may prejudice the time duration of the flight if APU start is not achieved.

It may be necessary therefore to include limitations on the number of attempted starts or to provide a separate battery for APU starting, if this method of supplying electrical power is adopted. Consideration should also be given to the equipment, services and duration required prior to the APU generator coming online. Common failures, which could affect the operation of all engines and the APU, should be taken into consideration, e.g. fuel supply.

b. *Ram Air Turbine (RAT).* A ram air turbine may be utilised to provide an alternate electrical power source, but due consideration must be given to ensuring that the means of bringing the unit into use are not dependent on a source which may have been lost as a result of the original failure. This will normally necessitate independent, duplicate means of deployment. Particular attention should be given to ensuring that the RAT and its means of deployment satisfy the overall reliability requirements.

The continuity of electrical power to those services which must remain operative without crew action prior to the RAT being brought into operation, may necessitate the use of a battery, unless the operation of the emergency power source is automatic and is supplying power within a timespan so as not to jeopardise the continued safety of the aeroplane in the event of failure of normal generated electrical power.

c. *Pneumatic or Hydraulic Motor Drive Power Source.* A pneumatic or hydraulic motor driven electrical power source may be utilised subject to the same constraints on activation as the ram air turbine (see 6.2(b)). Care should be taken in ensuring that the operation of the pneumatic or hydraulic system is not prejudiced by faults leading to, or resulting from, the original failure, including the loss of, or inability to restart all engines.

d. *Regaining of Main Generators*. In the event of a major loss of electrical power, provision may be made for regaining the output of one or more generators using separate control and switching arrangements on the generator side of the normal generator line contactor. Such a system would not normally be acceptable on aeroplanes with less than three engine-driven generators, as the probability of the loss of all engine-driven generators is unlikely to meet the requirements of CS 25.1351(d). To comply with CS 25.1351(d)(2) the system should be designed such that the loss of both the main and alternate means of control and distribution is Extremely Improbable. Consideration should be given to the services and duration required prior to the activation of the system and to enable a descent and forced landing to be made, in the event of the inability to restart all engines.

CS 25.1353 Electrical equipment and installations

ED Decision 2003/2/RM

(a) Electrical equipment, controls, and wiring must be installed so that operation of any one unit or system of units will not adversely affect the simultaneous operation of any other electrical unit or system essential to the safe operation. Any electrical interference likely to be present in the aeroplane must not result in hazardous effects upon the aeroplane or its systems except under extremely remote conditions. (See AMC 25.1353(a).)

(b) Cables must be grouped, routed and spaced so that damage to essential circuits will be minimised if there are faults in cables, particularly heavy current-carrying cables.

(c) Storage batteries must be designed and installed as follows:

(1) Safe cell temperatures and pressures must be maintained during any probable charging or discharging condition. No uncontrolled increase in cell temperature may result when the battery is recharged (after previous complete discharge) –

(i) At maximum regulated voltage or power;

(ii) During a flight of maximum duration; and

(iii) Under the most adverse cooling condition likely to occur in service.

(2) Compliance with sub-paragraph (1) of this paragraph must be shown by test unless experience with similar batteries and installations has shown that maintaining safe cell temperatures and pressures presents no problem.

(3) No explosive or toxic gases emitted by any battery in normal operation, or as the result of any probable malfunction in the charging system or battery installation, may accumulate in hazardous quantities within the aeroplane.

(4) No corrosive fluids or gases that may escape from the battery may damage surrounding aeroplane structures or adjacent essential equipment.

(5) Each nickel cadmium battery installation must have provisions to prevent any hazardous effect on structure or essential systems that may be caused by the maximum amount of heat the battery can generate during a short circuit of the battery or of individual cells.

(6) Nickel cadmium battery installations must have –

(i) A system to control the charging rate of the battery automatically so as to prevent battery overheating or;

(ii) A battery temperature sensing and over-temperature warning system with a means for disconnecting the battery from its charging source in the event of an overtemperature condition; or

(iii) A battery failure sensing and warning system with a means for disconnecting the battery from its charging source in the event of battery failure. (See AMC 25.1353(c)(6)(ii) and (iii).)

(d) Electrical cables and cable installations must be designed and installed as follows:

(1) The electrical cables used must be compatible with the circuit protection devices required by CS 25.1357, such that a fire or smoke hazard cannot be created under temporary or continuous fault conditions.

(2) Means of permanent identification must be provided for electrical cables, connectors and terminals.

(3) Electrical cables must be installed such that the risk of mechanical damage and/or damage caused by fluids, vapours or sources of heat, is minimised.

(e) Electrical bonding must provide an adequate electrical return path under both normal and fault conditions, on aeroplanes having earthed electrical systems (see CS 25.899).

AMC 25.1353(a) Electrical equipment and installations

ED Decision 2003/2/RM

The possible sources of interference to be considered should include –

a. Conducted and radiated interference caused by electrical noise generation from apparatus connected to the busbars,

b. Coupling between electrical cables or between cables and aerial feeders,

c. Malfunctioning of electrically-powered apparatus,

d. Parasitic currents and voltages in the electrical distribution and earth systems, including the effects of lightning currents or static discharge,

e. Difference frequencies between generating or other systems, and

f. The requirements of CS 25.1309 should also be satisfied.

AMC 25.1353(c)(6)(ii) and (iii) Electrical equipment and installations

ED Decision 2003/2/RM

Where temperature sensing and over-temperature warning devices are installed to comply with CS 25.1353(c)(6)(ii) or (iii), their correct operations should be verified at agreed maintenance intervals in addition to compliance with CS 25.1309(a) and (b).

CS 25.1355 Distribution system

ED Decision 2003/2/RM

(a) The distribution system includes the distribution busses, their associated feeders, and each control protective device.

(b) Reserved.

(c) If two independent sources of electrical power for particular equipment or systems are required for certification, or by operating rules, in the event of the failure of one power source for such equipment or system, another power source (including its separate feeder) must be automatically provided or be manually selectable to maintain equipment or system operation. (See AMC 25.1355(c) and AMC 25.1310(a).)

AMC 25.1355(c) Distribution system

ED Decision 2003/2/RM

The arrangement, protection and control of the feeders from the busbars to the distribution points, and the divisions of loads among the feeders, should be such that no single fault occurring in any feeder or associated control circuit will hazard the aeroplane.

CS 25.1357 Circuit protective devices

ED Decision 2003/2/RM

(a) Automatic protective devices must be used to minimise distress to the electrical system and hazard to the aeroplane in the event of wiring faults or serious malfunction of the system or connected equipment. (See AMC 25.1357(a).)

(b) The protective and control devices in the generating system must be designed to de-energise and disconnect faulty power sources and power transmission equipment from their associated busses with sufficient rapidity to provide protection from hazardous over-voltage and other malfunctioning.

(c) Each re-settable circuit protective device must be designed so that, when an overload or circuit fault exists, it will open the circuit irrespective of the position of the operating control.

(d) If the ability to reset a circuit breaker or replace a fuse is essential to safety in flight, that circuit breaker or fuse must be located and identified so that it can be readily reset or replaced in flight. Where fuses are used, there must be spare fuses for use in-flight equal to at least 50% of the number of fuses of each rating required for complete circuit protection.

(e) Each circuit for essential loads must have individual circuit protection. However, individual protection for each circuit in an essential load system (such as each position light circuit in a system) is not required.

(f) Reserved

(g) Automatic reset circuit breakers may be used as integral protectors for electrical equipment (such as thermal cutouts) if there is circuit protection to protect the cable to the equipment.

AMC 25.1357(a) Circuit protective devices

ED Decision 2003/2/RM

No hazard should result from the effects of variations in ambient temperatures on either the protective device or the equipment it protects. See also CS 25.1309.

CS 25.1360 Precautions against injury

ED Decision 2003/2/RM

(a) *Shock*. The electrical system must be designed so as to minimise the risk of electric shock to crew, passengers and servicing personnel and also to maintenance personnel using normal precautions. (See AMC 25.1360(a) and CS 25.899.)

(b) *Burns*. The temperature of any part, which has to be handled during normal operation by the flight crew, must not be such as to cause dangerous inadvertent movement, or injury to the crewmember. (See AMC 25.1360(b).)

AMC 25.1360(a) Protection against injury

ED Decision 2003/2/RM

1 Where there may be a hazard during maintenance or servicing, aeroplane panels, etc., carrying voltages of above 50V RMS, should be marked with the voltage.

2 Where socket outlets are provided, these should be labelled as to use and with the output voltage or voltages. Where the output voltage exceeds 100 volts d.c. and/or 50 volts a.c. RMS

either the output should be electrically isolated from the aeroplane structure, or means shall be provided to prevent inadvertent contact with live parts.

AMC 25.1360(b) Protection against injury

ED Decision 2003/2/RM

1 For equipment which has to be handled during normal operation by the flight or cabin crew, a temperature rise of the order of 25°C, for metal parts, should not be exceeded. For other equipment, mounted in parts of the aeroplane normally accessible to passengers or crew, or which may come into contact with objects such as clothing or paper, the surface temperature should not exceed 100°C, in an ambient temperature of 20°C.

2 The heating surfaces of properly installed cooking apparatus are excluded from these requirements.

3 The provision of guards around hot surfaces is an acceptable method of complying with these requirements.

CS 25.1362 Electrical supplies for emergency conditions

ED Decision 2003/2/RM

A suitable supply must be provided to those services, which are required, in order that emergency procedures may be carried out, after an emergency landing or ditching. The circuits for these services must be so designed, protected and installed such that the risk of their causing a fire, under these conditions, is minimised.

AMC 25.1362 Electrical supplies for emergency conditions

ED Decision 2003/2/RM

1 The emergency services which may require a supply include fuel shut-off valves, hydraulic shut-off valves and engine / APU fire extinguisher systems.

2 An appropriate design and/or unambiguous AFM procedures should be provided in order to prevent disconnection of the electrical supply to the required services before the emergency procedures are fully completed.

CS 25.1363 Electrical system tests

ED Decision 2003/2/RM

(a) Tests must be made to determine that the performance of the electrical supply systems meets the requirements of this CS-25 under all the appropriate normal and failure conditions. When laboratory tests of the electrical system are conducted –

(1) The tests must be performed on a mock-up using the same generating equipment used in the aeroplane;

(2) The equipment must simulate the electrical characteristics of the distribution wiring and connected loads to the extent necessary for valid test results; and

(3) Laboratory generator drives must simulate the actual prime movers on the aeroplane with respect to their reaction to generator loading, including loading due to faults.

(b) For each flight condition that cannot be simulated adequately in the laboratory or by ground tests on the aeroplane, flight tests must be made.

AMC 25.1363 Electrical systems tests

ED Decision 2003/2/RM

1 In carrying out the tests due account should be taken of load switching and flight crew operation of the system.

2 *Laboratory or Ground Tests*

2.1 All tests should be carried out with all equipment as representative as possible of the actual aeroplane. In particular, the simulation should include the correct representation of aeroplane cables in size, length and impedance, the correct ground (airframe) impedance and relative ground plane location and their location to other cables or systems that could influence performance. System loads and the generator drive system should also be correctly simulated.

2.2 The tests may be carried out on representative laboratory rigs or in an actual aeroplane, as appropriate.

2.3 Test procedures should be prepared to cover each test condition in the programme.

3 *Aeroplane Flight Tests*

3.1 If not adequately simulated by laboratory or ground testing, flight tests should be carried out as necessary.

3.2 Temperature tests should be carried out on equipment to establish the adequacy of the cooling media under all ground and flight conditions.

3.3 Measurements should be made to ensure that all equipment, particularly the aeroplane battery, is operating within its specified environmental conditions.

3.4 Test procedures should be prepared to cover the conditions of the tests.

CS 25.1365 Electrical appliances, motors and transformers

ED Decision 2006/005/R

(a) Domestic appliances must be so designed and installed that in the event of failures of the electrical supply or control system, the requirements of CS 25.1309(b) and (c) will be satisfied.

(b) The installation of galleys and cooking appliances must be such as to minimise the risk of overheat or fire.

(c) Domestic appliances, particularly those in galley areas, must be so installed or protected as to prevent damage or contamination of other equipment or systems from fluids or vapours which may be present during normal operation or as a result of spillage, where such damage or contamination may hazard the aeroplane.

(d) Unless it can be shown that compliance with CS 25.1309(b) is provided by the circuit protective device required by CS 25.1357(a), electric motors and transformers etc. (including those installed in domestic systems, such as galleys and toilet flush systems) must be provided with a suitable thermal protection device if necessary to prevent them overheating such as to create a smoke or fire hazard under normal operation and failure conditions.

[Amdt 25/2]

AMC 25.1365 Electrical appliances, motors and transformers

ED Decision 2003/2/RM

1. Heated Domestic Appliances (Galley Equipment)

In showing compliance with CS 25.1365(a), the following should be taken into consideration:

1.1 The design and installation of heated domestic appliances should be such that no single failure (e.g. welded thermostat or contactor, loss of water supply) can result in dangerous overheating and consequent risk of fire or smoke or injury to occupants.

An acceptable method of achieving this is by the provision of a means independent of the normal temperature control system, which will automatically interrupt the electrical power supply to the unit in the event of an overheat condition occurring. The means adopted should be such that it cannot be reset in flight.

1.2 The design and installation of microwave ovens should be such that no hazard could be caused to the occupants or the equipment of the aeroplane under either normal operation or single failure conditions.

1.3 Heated liquid containers, e.g. water boilers, coffee makers should, in addition to overheat protection, be provided with an effective means to relieve overpressure, either in the equipment itself or in its installations.

1.4 When considering failures of domestic appliances, the effect of the loss of the water supply to a water heater, with the electrical supply maintained, should be taken into account.

NOTES:

Due account should be taken of the possible effects of lime scale deposit both in the design and maintenance procedures of water heating equipment.

The design of galley and cooking appliance installations should be such as to facilitate cleaning to limit the accumulation of extraneous substances, which may constitute a fire risk.

2. Electric Overheat Protection Equipment

In showing compliance with CS 25.1365(d), the following should be taken into consideration:

a. Failures of any automatic control systems, e.g. automatic timer systems, which may cause the motor to run continuously;

b. Short circuit failures of motor windings or transformer windings to each other or to the motor or transformer frame;

c. Open circuit of one or more phases on multi-phase motors;

d. Motor seizures;

e. The proximity of flammable materials or fluids;

f. The proximity of other aeroplane installations;

g. Spillage of fluids, such as toilet waste;

h. Accumulation of combustible material; and

i. Cooling air discharge under normal operating or failure conditions.

3. Water Systems

3.1 Where water is provided in the aeroplane for consumption, or use by the occupant, the associated system should be designed so as to ensure that no hazard to the aeroplane could result from water coming into contact with electrical or other systems.

3.2 Service connections (filling points) should be of a different type from those used for other services, such that water could not inadvertently be introduced into the systems for other services.

LIGHTS

CS 25.1381 Instrument lights

ED Decision 2003/2/RM

(a) The instrument lights must –

(1) Provide sufficient illumination to make each instrument, switch and other device necessary for safe operation easily readable unless sufficient illumination is available from another source; and

(2) Be installed so that –

(i) Their direct rays are shielded from the pilot's eyes; and

(ii) No objectionable reflections are visible to the pilot.

(b) Unless undimmed instrument lights are satisfactory under each expected flight condition, there must be a means to control the intensity of illumination.

CS 25.1383 Landing lights

ED Decision 2003/2/RM

(a) Each landing light must be approved, and must be installed so that –

(1) No objectionable glare is visible to the pilot;

(2) The pilot is not adversely affected by halation; and

(3) It provides enough light for night landing.

(b) Except when one switch is used for the lights of a multiple light installation at one location, there must be a separate switch for each light.

(c) There must be a means to indicate to the pilots when the landing lights are extended.

CS 25.1385 Position light system installation

ED Decision 2003/2/RM

(a) *General*. Each part of each position light system must meet the applicable requirements of this paragraph and each system as a whole must meet the requirements of CS 25.1387 to 25.1397.

(b) *Forward position lights*. Forward position lights must consist of a red and a green light spaced laterally as far apart as practicable and installed forward on the aeroplane so that, with the aeroplane in the normal flying position, the red light is on the left side, and the green light is on the right side. Each light must be approved.

(c) *Rear position light.* The rear position light must be a white light mounted as far aft as practicable on the tail or on each wing tip, and must be approved.

(d) *Light covers and colour filters.* Each light cover or colour filter must be at least flame resistant and may not change colour or shape or lose any appreciable light transmission during normal use.

CS 25.1387 Position light system dihedral angles

ED Decision 2003/2/RM

(a) Except as provided in sub-paragraph (e) of this paragraph, each forward and rear position light must, as installed, show unbroken light within the dihedral angles described in this paragraph.

(b) Dihedral angle L (left) is formed by two intersecting vertical planes, the first parallel to the longitudinal axis of the aeroplane, and the other at 110° to the left of the first, as viewed when looking forward along the longitudinal axis.

(c) Dihedral angle R (right) is formed by two intersecting vertical planes, the first parallel to the longitudinal axis of the aeroplane, and the other at 110° to the right of the first, as viewed when looking forward along the longitudinal axis.

(d) Dihedral angle A (aft) is formed by two intersecting vertical planes making angles of 70° to the right and to the left, respectively, to a vertical plane passing through the longitudinal axis, as viewed when looking aft along the longitudinal axis.

(e) If the rear position light when mounted as far aft as practicable in accordance with CS 25.1385(c), cannot show unbroken light within dihedral angle A (as defined in sub-paragraph (d) of this paragraph), a solid angle or angles of obstructed visibility totalling not more than 0·04 steradians is allowable within that dihedral angle, if such solid angle is within a cone whose apex is at the rear position light and whose elements make an angle of 30° with a vertical line passing through the rear position light.

CS 25.1389 Position light distribution and intensities

ED Decision 2003/2/RM

(a) *General*. The intensities prescribed in this paragraph must be provided by new equipment with light covers and colour filters in place. Intensities must be determined with the light source operating at a steady value equal to the average luminous output of the source at the normal operating voltage of the aeroplane. The light distribution and intensity of each position light must meet the requirements of sub-paragraph (b) of this paragraph.

(b) *Forward and rear position lights.* The light distribution and intensities of forward and rear position lights must be expressed in terms of minimum intensities in the horizontal plane, minimum intensities in any vertical plane, and maximum intensities in overlapping beams, within dihedral angles L, R and A, and must meet the following requirements:

(1) *Intensities in the horizontal plane.* Each intensity in the horizontal plane (the plane containing the longitudinal axis of the aeroplane and perpendicular to the plane of symmetry of the aeroplane) must equal or exceed the values in CS 25.1391.

(2) *Intensities in any vertical plane.* Each intensity in any vertical plane (the plane perpendicular to the horizontal plane) must equal or exceed the appropriate value in CS 25.1393, where I is the minimum intensity prescribed in CS 25.1391 for the corresponding angles in the horizontal plane.

(3) *Intensities in overlaps between adjacent signals.* No intensity in any overlap between adjacent signals may exceed the values given in CS 25.1395, except that higher intensities in overlaps may be used with main beam intensities substantially greater than the minima

specified in CS 25.1391 and 25.1393 if the overlap intensities in relation to the main beam intensities do not adversely affect signal clarity. When the peak intensity of the forward position lights is more than 102 cd (100 candles), the maximum overlap intensities between them may exceed the values given in CS 25.1395 if the overlap intensity in Area A is not more than 10% of peak position light intensity and the overlap intensity in Area B is not greater than 2·5% of peak position light intensity.

CS 25.1391 Minimum intensities in the horizontal plane of forward and rear position lights

ED Decision 2003/2/RM

Each position light intensity must equal or exceed the applicable values in the following table:

Dihedral angle (light included)	Angle from right or left of longitudinal axis, measured from dead ahead	Intensity candela (candles)
L and R (forward red and green)	0° to 10°	41 (40)
	10° to 20°	31 (30)
	20° to 110°	5
A (rear white)	110° to 180°	20

CS 25.1393 Minimum intensities in any vertical plane of forward and rear position lights

ED Decision 2003/2/RM

Each position light intensity must equal or exceed the applicable values in the following table:

Angle above or below the horizontal plane:	Intensity
0°	1·00 I
0° to 5°	0·90 I
5° to 10°	0·80 I
10° to 15°	0·70 I
15° to 20°	0·50 I
20° to 30°	0·30 I
30° to 40°	0·10 I
40° to 90°	0·05 I

CS 25.1395 Maximum intensities in over-lapping beams of forward and rear position lights

ED Decision 2003/2/RM

No position light intensity may exceed the applicable values in the following table, except as provided in CS 25.1389(b)(3):

Overlaps	Maximum intensity	
	Area A candela (candles)	Area B candela (candles)
Green in dihedral angle L	10	1
Red in dihedral angle R	10	1
Green in dihedral angle A	5	1

Overlaps	Maximum intensity	
	Area A candela (candles)	Area B candela (candles)
Red in dihedral angle A	5	1
Rear white in dihedral angle L	5	1
Rear white in dihedral angle R	5	1

Where –

(a) Area A includes all directions in the adjacent dihedral angle that pass through the light source and intersect the common boundary plane at more than 10° but less than 20°; and

(b) Area B includes all directions in the adjacent dihedral angle that pass through the light source and intersect the common boundary plane at more than 20°.

CS 25.1397 Colour specifications

ED Decision 2003/2/RM

Each position light colour must have the applicable International Commission on Illumination chromaticity co-ordinates as follows:

(a) Aviation red –

'y' is not greater than 0·335; and

'z' is not greater than 0·002.

(b) Aviation green –

'x' is not greater than 0·440–0·320y;

'x' is not greater than y–0·170; and

'y' is not less than 0·390–0·170x.

(c) Aviation white –

'x' is not less than 0·300 and not greater than 0·540;

'y' is not less than 'x–0·040' or 'y_o–0·010', whichever is the smaller; and

'y' is not greater than 'x+0·020' nor '0·636–0·400x'; Where 'y_o' is the 'y' co-ordinate of the Planckian radiator for the value of 'x' considered.

CS 25.1401 Anti-collision light system

ED Decision 2003/2/RM

(a) *General*. The aeroplane must have an anticollision light system that –

(1) Consists of one or more approved anti-collision lights located so that their light will not impair the crew's vision or detract from the conspicuity of the position lights; and

(2) Meets the requirements of sub-paragraphs (b) to (f) of this paragraph.

(b) *Field of coverage*. The system must consist of enough light to illuminate the vital areas around the aeroplane considering the physical configuration and flight characteristics of the aeroplane. The field of coverage must extend in each direction within at least 75° above and 75° below the horizontal plane of the aeroplane, except that a solid angle or angles of obstructed visibility totalling not more than 0·03 steradians is allowable within a solid angle equal to 0·15 steradians centred about the longitudinal axis in the rearward direction.

(c) *Flashing characteristics*. The arrangement of the system, that is, the number of light sources, beam width, speed of rotation, and other characteristics, must give an effective flash frequency of not less than 40, nor more than 100 cycles per minute. The effective flash frequency is the frequency at which the aeroplane's complete anti-collision light system is observed from a distance, and applies to each section of light including any overlaps that exist when the system consists of more than one light source. In overlaps, flash frequencies may exceed 100, but not 180 cycles per minute.

(d) *Colour*. Each anti-collision light must be either aviation red or aviation white and must meet the applicable requirements of CS 25.1397.

(e) *Light intensity*. The minimum light intensities in all vertical planes, measured with the red filter (if used) and expressed in terms of 'effective' intensities, must meet the requirements of sub-paragraph (f) of this paragraph. The following relation must be assumed:

$$I_e = \frac{\int_{t_1}^{t_2} I(t)dt}{0 \cdot 2 + (t_2 - t_1)}$$

where:

I_e = effective intensity (candela (candles)

I(t) = instantaneous intensity as a function of time

$t_2 – t_1$ = flash time interval (seconds)

Normally, the maximum value of effective intensity is obtained when t_2 and t_1 are chosen so that the effective intensity is equal to the instantaneous intensity at t_2 and t_1.

(f) *Minimum effective intensities for anticollision lights.* Each anti-collision light effective intensity must equal or exceed the applicable values in the following table:

Angle above or below the horizontal plane:	Effective intensity (candela (candles))
0° to 5°	407 (400)
5° to 10°	244 (240)
10° to 20°	81 (80)
20° to 30°	41 (40)
30° to 75°	20

CS 25.1403 Wing icing detection lights

ED Decision 2003/2/RM

Unless operations at night in known or forecast icing conditions are prohibited by an operating limitation, a means must be provided for illuminating or otherwise determining the formation of ice on the parts of the wings that are critical from the standpoint of ice accumulation. Any illumination that is used must be of a type that will not cause glare or reflection that would handicap crewmembers in the performance of their duties.

SAFETY EQUIPMENT

CS 25.1411 General

ED Decision 2003/2/RM

(a) *Accessibility*. Required safety equipment to be used by the crew in an emergency must be readily accessible.

(b) *Stowage provisions*. Stowage provisions for required emergency equipment must be furnished and must –

(1) Be arranged so that the equipment is directly accessible and its location is obvious; and

(2) Protect the safety equipment from inadvertent damage.

(c) *Emergency exit descent device*. The stowage provisions for the emergency exit descent device required by CS 25.809(f) must be at the exits for which they are intended.

(d) *Liferafts*

(1) The stowage provisions for the liferafts described in CS 25.1415 must accommodate enough rafts for the maximum number of occupants for which certification for ditching is requested.

(2) Life rafts must be stowed near exits through which the rafts can be launched during an unplanned ditching.

(3) Rafts automatically or remotely released outside the aeroplane must be attached to the aeroplane by means of the static line prescribed in CS 25.1415.

(4) The stowage provisions for each portable life raft must allow rapid detachment and removal of the raft for use at other than the intended exits.

(e) *Long-range signalling device*. The stowage provisions for the long-range signalling device required by CS 25.1415 must be near an exit available during an unplanned ditching.

(f) *Life-preserver stowage provisions*. The stowage provisions for life preservers described in CS 25.1415 must accommodate one life preserver for each occupant for which certification for ditching is requested. Each life preserver must be within easy reach of each seated occupant.

(g) *Life line stowage provisions.* If certification for ditching under CS 25.801 is requested, there must be provisions to store the lifelines. These provisions must –

(1) Allow one life line to be attached to each side of the fuselage; and

(2) Be arranged to allow the lifelines to be used to enable the occupants to stay on the wing after ditching. This requirement is not applicable to aeroplanes having no over-wing ditching exits.

CS 25.1415 Ditching equipment

ED Decision 2003/2/RM

(a) Ditching equipment used in aeroplanes to be certified for ditching under CS 25.801, and required by the Operating Rules, must meet the requirements of this paragraph.

(b) Each liferaft and each life preserver must be approved. In addition –

(1) Unless excess rafts of enough capacity are provided, the buoyancy and seating capacity beyond the rated capacity of the rafts must accommodate all occupants of the aeroplane in the event of a loss of one raft of the largest rated capacity; and

(2) Each raft must have a trailing line, and must have a static line designed to hold the raft near the aeroplane but to release it if the aeroplane becomes totally submerged.

(c) Approved survival equipment must be attached to, or stored adjacent to, each liferaft.

(d) There must be an approved survival type emergency locator transmitter for use in one life raft.

(e) For aeroplanes, not certificated for ditching under CS 25.801 and not having approved life preservers, there must be an approved flotation means for each occupant. This means must be within easy reach of each seated occupant and must be readily removable from the aeroplane.

CS 25.1419 Ice Protection

ED Decision 2003/2/RM

If certification for flight in icing conditions is desired, the aeroplane must be able to safely operate in the continuous maximum and intermittent maximum icing conditions of Appendix C. To establish that the aeroplane can operate within the continuous maximum and intermittent maximum conditions of Appendix C –

(a) An analysis must be performed to establish that the ice protection for the various components of the aeroplane is adequate, taking into account the various aeroplane operational configurations; and

(b) To verify the ice protection analysis, to check for icing anomalies, and to demonstrate that the ice protection system and its components are effective, the aeroplane or its components must be flight tested in the various operational configurations, in measured natural atmospheric icing conditions, and as found necessary, by one or more of the following means:

(1) Laboratory dry air or simulated icing tests, or a combination of both, of the components or models of the components.

(2) Flight dry air tests of the ice protection system as a whole, or of its individual components.

(3) Flight tests of the aeroplane or its components in measured simulated icing conditions.

(c) Caution information, such as an amber caution light or equivalent, must be provided to alert the flight crew when the anti-ice or de-ice system is not functioning normally.

(d) For turbine engine powered aeroplanes, the ice protection provisions of this paragraph are considered to be applicable primarily to the airframe. For the powerplant installation, certain additional provisions of Subpart E may be found applicable.

AMC 25.1419 Ice Protection

ED Decision 2003/2/RM

1 *General*. Two ways of showing compliance with CS 25.1419 are given.

1.1 *Method 1.* Method 1 is an arbitrary empirical method based on United Kingdom and French practice. This method is acceptable to the Agency.

1.2 *Method 2.* Method 2 is a general approach based on US practice in applying FAR Part 25, Appendix C. If this method is used, each application will have to be evaluated on its merits.

1.3 Additional material, based on UK practice, appropriate to operating in ice crystal conditions is given in 4. This material should be used only where design features of the aeroplane are susceptible to this form of icing.

2 *Method 1* (Acceptable Means of Compliance)

2.1 Any part of the aeroplane (including its equipment) which is susceptible to ice accretion in ice forming conditions, should be subjected to such evaluation as would demonstrate the suitability of the aeroplane to fly in the ice forming conditions defined in CS Appendix C.

2.2 For the purposes of analysis and tests on protected surfaces the conditions of Figures 1, 2, 4 and 5 only of Appendix C should apply. In determining the rates of catch, the full spectrum of the droplet sizes should be considered but in determining impingement areas, a maximum droplet size of 50 µm need only be considered.

2.3 The natural icing tests carried out on the aeroplane will be judged for their acceptability by evaluation of icing conditions through which the aeroplane has flown in relation to the envelope of conditions of Appendix C.

2.4 Where there are parts of the aeroplane, which are not amenable to analysis, or when testing is considered necessary, the following paragraphs describe an acceptable method of demonstration that the requirements are complied with.

2.5 *Protected and Unprotected Parts of the Airframe*

2.5.1 *General*. When considering simulated icing tests, the flight conditions selected for testing at each temperature should be the most unfavourable taking account of aeroplane speed, altitude, angle of incidence and power supply. Where altitude is a critical parameter, the tests should be conducted in flight or on the ground so as to simulate the effects of altitude. When the tests are conducted in non-altitude conditions the system supply and the external aerodynamic and atmospheric conditions should be so modified as to represent the required altitude conditions as closely as possible.

2.5.2 *Tests in Continuous Maximum Conditions*

a. Those parts of the airframe where the accretion of ice under the conditions of Appendix C is likely to have an adverse effect on the airworthiness of the aeroplane, should be tested for a period of 30 minutes duration at each of the conditions specified in the following Table 1.

TABLE 1

Atmospheric Temperature (°C)	Liquid Water Content (g/m³)	Mean effective drop diameter (µm)
0	0·8	
–10	0·6	
–20	0·3	20
–30	0·2	

b. At the end of the tests the total ice accretion should be such as not to adversely affect the safety of the aeroplane.

c. The duration of the above tests can be reduced if it can be demonstrated that the surface is completely ice free or that the total ice accretion is

obviously contained by repetitive shedding either naturally or enforced by cyclic operation of the protective system.

2.5.3 *Check Concerning Intermittent Maximum Conditions*. It would be necessary to check that Intermittent Maximum icing conditions of Figures 4 and 5 of Appendix C do not hazard the aeroplane. The encounters considered should include three clouds of 5 km horizontal extent with Intermittent Maximum concentrations as in Table 2 separated by spaces of clear air of 5 km.

TABLE 2

Atmospheric Temperature (°C)	Liquid Water Content (g/m³)	Mean effective drop diameter (µm)
0	2·5	
–10	2·2	
–20	1·7	20
–30	1·0	

2.5.4 *Ice Accretion on Unprotected Parts*

a. Where ice can accrete on unprotected parts it should be demonstrated that the effect of such ice would not critically affect the characteristics of the aeroplane as regards safety (e.g. flight, structure and flutter). The subsequent operation of retractable devices should be considered.

b. Irrespective of what is required by paragraphs 2.5.2 and 2.5.3 from service experience the amount of ice on the most critical unprotected main aero-foil surface need not exceed a pinnacle height of 75 mm (3 in) in a plane in the direction of flight. For other unprotected main surfaces an analysis may be performed to determine the maximum ice accretion associated with this maximum pinnacle height. In the absence of such an acceptable analysis a uniform pinnacle height of 75 mm (3 in) should be assumed. The shape and apparent density, taking into account the texture of the ice, are important. Unless suitable evidence is already available, icing tests should be conducted to determine the critical values of these properties.

c. The critical ice accretion on unprotected parts will normally occur during the hold near 4572 m (15 000 feet) at about –10°C so as to give a total temperature of around 0°C.

2.5.5 *Ice Shedding*. Parts of the aeroplane, which can accrete ice, which upon shedding could interfere with the continuous safe operation of the engines or essential services, should be so protected as to prevent the shedding of ice having more than critical dimensions for the engine or device or it should be demonstrated that the trajectories of such ice are not critical. The protection or otherwise should be demonstrated assuming the ice conditions against which the engine air intake is required to be demonstrated.

2.5.6 *Essential Equipment*. Tests should be conducted to the same standard as recommended for turbine engine air intakes (see AMC 25.1093(b)(1)) unless it can be shown that the items are so designed and located as not to be susceptible to icing conditions. Ice crystal and mixed ice and water cloud will need to be considered. However, in conducting these tests due regard should be given to the presence of the aeroplane and its effect on the local concentration of the cloud.

3 *Method 2* (Interpretative Material)

3.1 Any part of the aeroplane (including its equipment) which is susceptible to ice accretion in iceforming conditions, should be subjected to such evaluations as would demonstrate the suitability of the aeroplane to fly in ice-forming conditions defined in CS 25, Appendix C, using FAA Advisory Circular AC 2073, dated 21st April, 1971, and FAA Technical Report ADS4, dated March, 1964.

3.2 Factors, which should be considered in the evaluation, are –

a. The meteorological conditions of Appendix C,

b. The operational conditions which would affect the accumulation of ice on protected and unprotected surfaces of the aeroplane,

c. The operational conditions of the engine and propeller (if applicable) which would affect the accumulation of ice and/or the availability of energy to operate systems, and

d. The local condition resulting from installation on the aeroplane.

3.3 For the purpose of analysis and tests on protected and unprotected surfaces, all Figures 1 to 6 of Appendix C are used. In determining the more critical conditions of rate of catch and limits of impingements, the full spectrum of droplet sizes should be considered, taking into account the droplet size distribution (Langmuir D distribution is acceptable for this use).

3.4 The natural icing tests carried out on the aeroplane will be judged for their acceptability by the evaluation of the icing conditions through which the aeroplane has flown in relation to the envelope of conditions of Appendix C.

3.5 In following the alternative procedures as listed in CS 25.1419(c)(1) and (3), the conditions selected for testing should be the most critical as determined from the analysis.

3.6 Where ice can accrete on protected or unprotected parts it should be demonstrated that the effect of such ice will not critically affect the characteristics of the aeroplane as regards safety (e.g. flight, structure and flutter). The subsequent operation of retractable safety devices should be considered.

3.7 From service experience the amount of ice on the most critical unprotected main aerofoil surface need not usually exceed a pinnacle height of 75 mm (3 in) in a plane in the direction of flight. For other unprotected main surfaces an analysis may be performed to determine the maximum ice accretion associated with this maximum pinnacle height. In the absence of such an acceptable analysis a uniform pinnacle height of 75 m (3 in) should be assumed. The shape and apparent density, taking into account the texture of the ice, are important. Unless suitable evidence is already available, icing tests should be conducted to determine the critical values of these properties.

3.8 The critical ice accretion on unprotected parts will normally occur during the hold near 4572 m (15 000) feet so as to give a total temperature of around 0°C.

3.9 Parts of the aeroplane which can accrete ice, which, upon shedding, could interfere with the continuous safe operation of the engines or essential services should, if necessary, be so protected as to prevent the shedding of ice having more than critical dimensions for the engine or device, or it should be demonstrated that the trajectories of such ice are not critical.

4 *Ice Crystal Conditions*. An assessment should be made into the vulnerability of the aeroplane and its systems to ice crystal conditions.

4.1 The parts most likely to be vulnerable are –

a. Turbine engine intakes with bends, particularly reverse flow (see CS 25.1093), and

b. Pitot heads, etc. (see CS 25.1323 and 1325).

4.2 Other parts requiring evaluation could be –

a. Ducts supplying essential air e.g. cooling, and

b. APU intakes (see AMC 25.1093(b)(2)).

4.3 Where any doubt exists as to the safe operation in ice crystal conditions appropriate tests should be conducted to establish the proper functioning of the system likely to be affected.

4.4 For guidance Table 3 gives provisional details of the conditions likely to be encountered in service.

TABLE 3

Air Temperature (°C)	Altitude Range		Maximum Crystal Content (g/m^3)	Horizontal Extend		Mean Particle Diameter (mm)
	(ft)	(m)		(km)	(n miles)	
0 to –20	10 000 to 30 000	3000 to 9000	5·0 2·0 1·0	5 100 500	(3) (50) (300)	1.0
–20 to –40	15 000 to 40 000	4500 to 12 000	5·0 2·0 1·0 0·5	5 20 100 500	(3) (10) (50) (300)	

NOTES:

1 In the temperature range 0 to –10°C the ice crystals are likely to be mixed with water droplets (with a maximum diameter of 2 mm) up to a content of 1 g/m^3 or half the total content whichever is the lesser, the total content remaining numerically the same.

2 The source of information is RAE Tech Note, Mech. Eng. 283 dated May 1959.

CS 25.1421 Megaphones

ED Decision 2003/2/RM

If a megaphone is installed, a restraining means must be provided that is capable of restraining the megaphone when it is subjected to the ultimate inertia forces specified in CS 25.561(b)(3).

CS 25.1423 Public address system

ED Decision 2006/005/R

A public address system required by operational rules must –

(a) Be powerable when the aircraft is in flight or stopped on the ground, after the shutdown or failure of all engines and auxiliary power units, or the disconnection or failure of all power sources dependent on their continued operation, for –

(1) A time duration of at least 10 minutes, including an aggregate time duration of at least 5 minutes of announcements made by flight and cabin crew members, considering all other loads which may remain powered by the same source when all other power sources are inoperative; and

(2) An additional time duration in its standby state appropriate or required for any other loads that are powered by the same source and that are essential to safety of flight or required during emergency conditions.

(b) The system must be capable of operation within 3 seconds from the time a microphone is removed from its stowage by a cabin crew member at those stations in the passenger compartment from which its use is accessible.

(c) Be intelligible at all passenger seats, lavatories, and cabin crew member seats and work stations.

(d) Be designed so that no unused, un-stowed microphone will render the system inoperative.

(e) Be capable of functioning independently of any required crewmember interphone system.

(f) Be accessible for immediate use from each of two flight-crew member stations in the pilot compartment.

(g) For each required floor-level passenger emergency exit which has an adjacent cabin crew member seat, have a microphone which is readily accessible to the seated cabin crew member, except that one microphone may serve more than one exit, provided the proximity of the exits allows unassisted verbal communications between seated cabin crew members.

[Amdt 25/2]

MISCELLANEOUS EQUIPMENT

CS 25.1431 Electronic equipment

ED Decision 2003/2/RM

(a) In showing compliance with CS 25.1309(a) and (b) with respect to radio and electronic equipment and their installations, critical environmental conditions must be considered

(b) Radio and electronic equipment must be supplied with power under the requirements of CS 25.1355(c).

(c) Radio and electronic equipment, controls and wiring must be installed so that operation of any one unit or system of units will not adversely affect the simultaneous operation of any other radio or electronic unit, or system of units, required by this CS-25.

(d) Electronic equipment must be designed and installed such that it does not cause essential loads to become inoperative, as a result of electrical power supply transients or transients from other causes.

CS 25.1433 Vacuum systems

ED Decision 2003/2/RM

There must be means, in addition to the normal pressure relief, to automatically relieve the pressure in the discharge lines from the vacuum air pump when the delivery temperature of the air becomes unsafe.

CS 25.1435 Hydraulic Systems

ED Decision 2006/005/R

(a) *Element design.* Each element of the hydraulic system must be designed to:

(1) Withstand the proof pressure without permanent deformation that would prevent it from performing its intended function, and the ultimate pressure without rupture. The proof and ultimate pressures are defined in terms of the design operating pressure (DOP) as follows:

	Element	Proof (x DOP)	Ultimate (xDOP)
1.	Tubes and fittings	1.5	3.0
2.	Pressure vessels containing gas High pressure (e.g. accumulators) Low pressure (e.g. reservoirs)	 3.0 1.5	 4.0 3.0
3.	Hoses	2.0	4.0
4.	All other elements	1.5	2.0

(2) Withstand, without deformation that would prevent it from performing its intended function, the design operating pressure in combination with limit structural loads that may be imposed;

(3) Withstand, without rupture, the design operating pressure multiplied by a factor of 1.5 in combination with ultimate structural loads that can reasonably occur simultaneously;

(4) Withstand the fatigue effects of all cyclic pressures, including transients, and associated externally induced loads, taking into account the consequences of element failure; and

(5) Perform as intended under all environmental conditions for which the aeroplane is certificated.

(b) *System design.* Each hydraulic system must:

(1) Have means located at a flight crew member station to indicate appropriate system parameters, if

(i) It performs a function necessary for continued safe flight and landing; or

(ii) In the event of hydraulic system malfunction, corrective action by the crew to ensure continued safe flight and landing is necessary;

(2) Have means to ensure that system pressures, including transient pressures and pressures from fluid volumetric changes in elements that are likely to remain closed long enough for such changes to occur, are within the design capabilities of each element, such that they meet the requirements defined in CS 25.1435(a)(1) through CS 25.1435(a)(5) inclusive;

(3) Have means to minimise the release of harmful or hazardous concentrations of hydraulic fluid or vapours into the crew and passenger compartments during flight;

(4) Meet the applicable requirements of CS 25.863, 25.1183, 25.1185 and 25.1189 if a flammable hydraulic fluid is used; and

(5) Be designed to use any suitable hydraulic fluid specified by the aeroplane manufacturer, which must be identified by appropriate markings as required by CS 25.1541.

(c) *Tests.* Tests must be conducted on the hydraulic system(s), and/or subsystem(s) and element(s), except that analysis may be used in place of or to supplement testing where the analysis is shown to be reliable and appropriate. All internal and external influences must be taken into account to an extent necessary to evaluate their effects, and to assure reliable system and element functioning and integration. Failure or unacceptable deficiency of an element or system must be corrected and be sufficiently retested, where necessary.

(1) The system(s), subsystem(s), or element(s) must be subjected to performance, fatigue, and endurance tests representative of aeroplane ground and flight operations.

(2) The complete system must be tested to determine proper functional performance and relation to other systems, including simulation of relevant failure conditions, and to support or validate element design.

(3) The complete hydraulic system(s) must be functionally tested on the aeroplane in normal operation over the range of motion of all associated user systems. The test must be conducted at the relief pressure or 1.25 times the DOP if a system pressure relief device is not part of the system design. Clearances between hydraulic system elements and other systems or structural elements must remain adequate and there must be no detrimental effects.

[Amdt 25/2]

AMC 25.1435 Hydraulic Systems - Design, Test, Analysis and Certification

ED Decision 2006/005/R

1. PURPOSE

This AMC (Acceptable Means of Compliance), which is similar to the FAA Advisory Circular AC 25.1435-1, provides advice and guidance on the interpretation of the requirements and on the acceptable means, but not the only means, of demonstrating compliance with the requirements of CS 25.1435. It also identifies other paragraphs of the Certification Specifications (CS) that contain related requirements and other related and complementary documents.

The advice and guidance provided does not in any way constitute additional requirements but reflects what is normally expected by the EASA.

2. RELATED REGULATORY MATERIAL AND COMPLEMENTARY DOCUMENTS

(a) Related Certification Specifications

CS-25 Paragraphs (and their associated AMC material where applicable) that prescribe requirements related to the design substantiation and certification of hydraulic systems and elements include:

CS 25.301	Loads
CS 25.303	Factor of safety
CS 25.863	Flammable fluid fire protection
CS 25.1183	Flammable fluid-carrying components
CS 25.1185	Flammable fluids
CS 25.1189	Shutoff means
CS 25.1301	Function and installation
CS 25.1309	Equipment, systems and installations
CS 25.1322	Warning, caution and advisory lights
CS 25.1541	General: Markings and Placards

Additional CS-25 paragraphs (and their associated AMC material where applicable) that prescribe requirements which can have a significant impact on the overall design and configuration of hydraulic systems are, but are not limited to:

CS 25.671	General: Control systems
CS 25.729	Retracting mechanism
CS 25.903	Engines
CS 25.1315	Negative acceleration

(b) Complementary Documents

Documents, which are considered to provide appropriate standards for the design substantiation and certification of hydraulic systems and system elements may include, but are not limited to:

(i) CS-European Standard Orders (CS-ETSO's)

ETSO-C47 Pressure Instruments - Fuel, Oil and Hydraulic

ETSO-2C75 Hydraulic Hose Assemblies

(ii) Society of Automotive Engineers (SAE) Documents

ARP 4752 Aerospace - Design and Installation of Commercial Transport Aircraft Hydraulic Systems

Note: This document provides a wide range of Civil, Military and Industry document references and standards, which may be appropriate.

(iii) International Organisation for Standardisation (ISO) Documents

ISO 7137 Environmental Conditions and Test Procedures for Airborne Equipment

(iv) US Military Documents

MIL-STD-810 Environmental Test Methods and Engineering Guidelines

(v) European Aviation Safety Agencies Publication

Certification Specification No. 20

AMC 20.6 Temporary Guidance Material for Extended Range Operation with Two-Engine Aeroplanes

ETOPS Certification and Operation

(vi) The European Organisation for Civil Aviation Equipment Documents

ED-14D/RTCA DO-160D Environmental Conditions and Test Procedures for Airborne Equipment

3. ADVICE AND GUIDANCE

(a) Element Design

(1) Ref. CS 25.1435(a)(1) The design operating pressure (DOP) is the normal maximum steady pressure. Excluded are reasonable tolerances, and transient pressure effects such as may arise from acceptable pump ripple or reactions to system functioning, or demands that may affect fatigue. Fatigue is addressed in sub-paragraph (a)(4) of this paragraph.

The DOP for low-pressure elements (e.g., return, case-drain, suction, reservoirs, etc.) is the maximum pressure expected to occur during normal user system operating modes. Included are transient pressures that may occur during separate or simultaneous operation of user systems such as slats, flaps, landing gears, thrust reverses, flight controls, power transfer units, etc. Short term transient pressures, commonly referred to as pressure spikes, that may occur during the selection and operation of user systems (e.g., those pressure transients due to the opening and closing of selector/control valves, etc.) may be excluded, provided the fatigue effect of such transients is addressed in accordance with sub-paragraph (a)(4) of this paragraph.

In local areas of systems and elements the DOP may be different from the above due to the range of normally anticipated aeroplane operational, dynamic and environmental conditions. Such differences should be taken into account.

At proof pressure, seal leakage not exceeding the allowed maximum in-service leak rate is permitted. Each element should be able to perform its intended functions when the DOP is restored.

For sub-paragraphs (a)(1), (a)(2) and (a)(3) of this paragraph, the pressure and structural loads, as applicable, should be sustained for sufficient time to enable adequate determination that compliance is demonstrated. Typically a time of 2 minutes for proof conditions and 1 minute for ultimate conditions will be considered acceptable.

The term "pressure vessels" is not intended to include small volume elements such as lines, fittings, gauges, etc. It may be necessary to use special factors for elements fabricated from non-metallic/composite materials.

(2) Ref. CS 25.1435(a)(2) Limit structural loads are defined in CS 25.301(a). The loading conditions of CS-25, subpart C to be considered include, but are not limited to, flight and ground manoeuvres, and gust and turbulence conditions. The loads arising in these conditions should be combined with the maximum hydraulic pressures, including transients that could occur simultaneously. Where appropriate, thermal effects should also be accounted for in the strength justification. For hydraulic actuators equipped with hydraulic or mechanical locking features, such as flight control actuators and power steering actuators, the actuators and other loaded elements should be designed for the most severe combination of internal and external loads that may occur in use. For hydraulic actuators that are free to move with external loads, i.e. do not have locking features, the structural loads are the same as the loads produced by the hydraulic actuators. At limit load, seal leakage not exceeding the allowed maximum in-service leak rate is permitted.

(3) Ref. CS 25.1435(a)(3) For compliance, the combined effects of the ultimate structural load(s) as defined in CS 25.301 and 25.303 and the DOP, which can reasonably occur simultaneously, should be taken into account with a factor of 1.5 applied to the DOP. In this case the overall structural integrity of the element should be maintained. However, it may be permissible for this element to suffer leakage, permanent deformation, operational/functional failure or any combination of these conditions. Where appropriate, thermal effects should also be accounted for in the strength justification.

(4) Ref. CS 25.1435(a)(4) Fatigue, the repeated load cycles of an element, is a significant contributor to element failure. Hydraulic elements are mainly subjected to pressure loads, but may also see externally induced load cycles (e.g. structural, thermal, etc.). The applicant should define the load cycles for each element. The number of load cycles should be evaluated to produce equivalent fatigue damage encountered during the life of the aeroplane or to support the assumptions used in demonstrating compliance with CS 25.1309. For example, if the failure analysis of the system allows that an element failure may occur at 25% of aeroplane life, the element fatigue life should at least support this assumption.

(5) Ref. CS 25.1435(a)(5) Aeroplane environmental conditions that an element should be designed for are those under which proper function is required. They may include, but are not limited to temperature, humidity, vibration, acceleration forces, icing, ambient pressure, electromagnetic effects, salt spray, cleaning agents, galvanic, sand, dust and fungus. They may be location specific (e.g., in pressurised cabin vs. in unpressurised area) or general (e.g. attitude). For further guidance on environmental testing, suitable references include, but are not limited to, Military Standard, MIL-STD-810 "Environmental Test Methods and Engineering Guidelines", The European Organisation for Civil Aviation Equipment Document ED-14D "Environmental Conditions and Test Procedures for Airborne Equipment" or International Organisation for Standardisation Document No. ISO 7137 "Environmental Conditions and Test Procedures for Airborne Equipment".

(b) System Design

Ref. CS 25.1435(b) Design features that should be considered for the elimination of undesirable conditions and effects are:

(a) Design and install hydraulic pumps such that loss of fluid to or from the pump cannot lead to events that create a hazard that might prevent continued safe operation. For example, engine driven pump shaft seal failure or leakage in combination with a blocked fluid drain, resulting in engine gearbox contamination with hydraulic fluid and subsequent engine failure.

(b) Design the system to avoid hazards arising from the effects of abnormally high temperatures, which may occur in the system under fault conditions.

(1) Ref. CS 25.1435(b)(1) Appropriate system parameters may include, but are not limited to, pump or system temperatures and pressures, system fluid quantities, and any other parameters which give the pilot indication of the functional level of the hydraulic systems.

(2) Ref. CS 25.1435(b)(2) Compliance may be shown by designing the systems and elements to sustain the transients without damage or failure, or by providing dampers, pressure relief devices, etc.

(3) Ref. CS 25.1435(b)(3) Harmful or hazardous fluid or vapour concentrations are those that can cause short term incapacitation of the flight crew or long term health effects to the passengers or crew.

Compliance may be shown by taking design precautions, to minimise the likelihood of releases and, in the event of a release, to minimise the concentrations. Suitable precautions, based on good engineering judgement, include separation of air conditioning and hydraulic systems, shut-off capability to hydraulic lines, reducing the number of joints and elements, shrouding, etc. In case of leakage, sufficient drainage should be provided.

(4) Ref. CS 25.1435(b)(4) Unless it has been demonstrated that there are no circumstances which can exist (on the aeroplane) under which the hydraulic fluid can be ignited in any of its physical forms (liquid, atomised, etc.), the hydraulic fluid should be considered to be flammable.

(5) Ref. CS 25.1435(b)(5) If more than one approved fluid is specified, the term “suitable hydraulic fluid” is intended to include acceptable mixtures. Typical nameplate marking locations for hydraulic fluid use, are all hydraulic components having elastomer seals such as cylinders, valves, reservoirs, etc.

(c) Tests

Ref. CS 25.1435(c) Test conditions should be representative of the environment that the element, subsystem or system may be exposed to in the design flight envelope. This may include loads, temperature, altitude effects, humidity, and other influences (electrical, pneumatic, etc.). Testing may be conducted in simulators, or stand-alone rigs, integrated laboratory rigs, or on the aeroplane. The test plan should describe the objectives and test methods. All interfaces between the aeroplane elements and the test facilities should be adequately represented.

(1) Ref. CS 25.1435(c)(1) Testing for performance should demonstrate rates and responses required for proper system operation. Testing for fatigue (the repeated load cycling of an element) and endurance (the ability of parts moving relative to each other to continue to perform their intended function) should be sufficient to show that the assumptions used in demonstrating compliance with CS 25.1309 are correct, but are not necessary to demonstrate aeroplane design life. As part of

demonstrating that the element(s), sub-system(s), or system(s) perform their intended functions, the manufacturer (applicant) may select procedures and factors of safety identified in accepted manufacturing, national, military, or industry standards, provided that it can be established that they are suitable for the intended application. Minimum design factors specified in those standards or the requirements may be used unless more conservative factors have been agreed with the Agency.

An acceptable test approach for fatigue or endurance testing is to:

(a) Define the intended element life;

(b) Determine the anticipated element duty cycle;

(c) Conduct testing using the anticipated or an equivalent duty cycle.

(2) Ref. CS 25.1435(c)(2) The tests should include simulation of hydraulic system failure conditions in order to investigate the effect(s) of those failures, and to correlate with the failure conditions considered for demonstrating compliance with CS 25.1309. Relevant failure conditions to be tested are those, which cannot be shown to be extremely improbable, and have effects assessed to be major, hazardous, or have significant system interaction or operational implications.

(3) Ref. CS 25.1435(c)(3) Compliance with CS 25.1435(c)(3) can be accomplished by applying a test pressure to the system using aeroplane pumps or an alternate pressure source (e.g. ground cart). The test pressure to be used should be just below the pressure required to initiate system pressure relief (cracking pressure). Return and suction pressures are allowed to be those, which result from application of the test pressure to the pressure side of the system.

Some parts of the system(s) may need to be separately pressurised to ensure the system is completely tested. Similarly, it may be permissible that certain parts of the system need not be tested if it can be shown that they do not constitute a significant part of the system with respect to the evaluation of adequate clearances or detrimental effects.

[Amdt 25/2]

CS 25.1436 Pneumatic systems – high pressure

ED Decision 2003/2/RM

(a) *General*. Pneumatic systems which are powered by, and/or used for distributing or storing, air or nitrogen, must comply with the requirements of this paragraph.

(1) Compliance with CS 25.1309 for pneumatic systems must be shown by functional tests, endurance tests and analysis. Any part of a pneumatic system which is an engine accessory must comply with the relevant requirements of CS 25.1163.

(2) No element of the pneumatic system which would be liable to cause hazardous effects by exploding, if subject to a fire, may be mounted within an engine bay or other designated fire zone, or in the same compartment as a combustion heater.

(3) When the system is operating no hazardous blockage due to freezing must occur. If such blockage is liable to occur when the aeroplane is stationary on the ground, a pressure relieving device must be installed adjacent to each pressure source.

(b) *Design*. Each pneumatic system must be designed as follows:

(1) Each element of the pneumatic system must be designed to withstand the loads due to the working pressure, P_w, in the case of elements other than pressure vessels or to the limit pressure, P_L, in the case of pressure vessels, in combination with limit structural loads which may be imposed without deformation that would prevent it from performing its intended function, and to withstand without rupture, the working or limit pressure loads multiplied by a factor of 1·5 in combination with ultimate structural loads that can reasonably occur simultaneously.

(i) P_w. The working pressure is the maximum steady pressure in service acting on the element including the tolerances and possible pressure variations in normal operating modes but excluding transient pressures.

(ii) P_L. The limit pressure is the anticipated maximum pressure in service acting on a pressure vessel, including the tolerances and possible pressure variations in normal operating modes but excluding transient pressures.

(2) A means to indicate system pressure located at a flight-crew member station, must be provided for each pneumatic system that –

(i) Performs a function that is essential for continued safe flight and landing; or

(ii) In the event of pneumatic system malfunction, requires corrective action by the crew to ensure continued safe flight and landing.

(3) There must be means to ensure that system pressures, including transient pressures and pressures from gas volumetric changes in components which are likely to remain closed long enough for such changes to occur –

(i) Will be within 90 to 110% of pump average discharge pressure at each pump outlet or at the outlet of the pump transient pressure dampening device, if provided; and

(ii) Except as provided in sub-paragraph (b)(6) of this paragraph, will not exceed 125% of the design operating pressure, excluding pressure at the outlets specified in sub-paragraph (b)(3)(i) of this paragraph. Design operating pressure is the maximum steady operating pressure.

The means used must be effective in preventing excessive pressures being generated during ground charging of the system. (See AMC 25.1436(b)(3).)

(4) Each pneumatic element must be installed and supported to prevent excessive vibration, abrasion, corrosion, and mechanical damage, and to withstand inertia loads.

(5) Means for providing flexibility must be used to connect points in a pneumatic line between which relative motion or differential vibration exists.

(6) Transient pressure in a part of the system may exceed the limit specified in sub-paragraph (b)(3)(ii) of this paragraph if –

(i) A survey of those transient pressures is conducted to determine their magnitude and frequency; and

(ii) Based on the survey, the fatigue strength of that part of the system is substantiated by analysis or tests, or both.

(7) The elements of the system must be able to withstand the loads due to the pressure given in Appendix L, for the proof condition without leakage or permanent distortion and for the ultimate condition without rupture. Temperature must be those corresponding to normal operating conditions. Where elements are constructed from materials other than

aluminium alloy, tungum, or medium-strength steel, the Authority may prescribe or agree other factors. The materials used should in all cases be resistant to deterioration arising from the environmental conditions of the installation, particularly the effects of vibration.

(8) Where any part of the system is subject to fluctuating or repeated external or internal loads, adequate allowance must be made for fatigue.

(c) Tests

(1) A complete pneumatic system must be static tested to show that it can withstand a pressure of 1·5 times the working pressure without a deformation of any part of the system that would prevent it from performing its intended function. Clearance between structural members and pneumatic system elements must be adequate and there must be no permanent detrimental deformation. For the purpose of this test, the pressure relief valve may be made inoperable to permit application of the required pressure.

(2) The entire system or appropriate sub-systems must be tested in an aeroplane or in a mock-up installation to determine proper performance and proper relation to other aeroplane systems. The functional tests must include simulation of pneumatic system failure conditions. The tests must account for flight loads, ground loads, and pneumatic system working, limit and transient pressures expected during normal operation, but need not account for vibration loads or for loads due to temperature effects. Endurance tests must simulate the repeated complete flights that could be expected to occur in service. Elements which fail during the tests must be modified in order to have the design deficiency corrected and, where necessary, must be sufficiently retested. Simulation of operating and environmental conditions must be completed on elements and appropriate portions of the pneumatic system to the extent necessary to evaluate the environmental effects. (See AMC 25.1436(c)(2).)

(3) Parts, the failure of which will significantly lower the airworthiness or safe handling of the aeroplane must be proved by suitable testing, taking into account the most critical combination of pressures and temperatures which are applicable.

[Amdt 25/1]

AMC 25.1436(b)(3) Pneumatic Systems

ED Decision 2003/2/RM

1 In systems in which the air pressure of the supply sources is significantly greater than the system operating pressure (e.g. an engine bleed-air tapping) due account should be taken of the consequences of failure of the pressure-regulating device when assessing the strength of the system, downstream of the device relative to the values of P_W, P_L and P_R.

2 Such devices should be protected as necessary against deleterious effects resulting from the presence of oil, water or other impurities, which may exist in the system.

AMC 25.1436(c)(2) Pneumatic Systems

ED Decision 2003/2/RM

The loads due to vibration and the loads due to temperature effects are those loads, which act upon the elements of the system due to environmental conditions.

CS 25.1438 Pressurisation and low pressure pneumatic systems

ED Decision 2003/2/RM

Pneumatic systems (ducting and components) served by bleed air, such as engine bleed air, air conditioning, pressurisation, engine starting and hotair ice-protection systems, which are essential for the safe operation of the aeroplane or whose failure may adversely affect any essential or critical part of the aeroplane or the safety of the occupants, must be so designed and installed as to comply the CS 25.1309 In particular account must be taken of bursting or excessive leakage. (See AMC 25.1438 paragraph 1 for strength and AMC 25.1438 paragraph 2 for testing.)

AMC 25.1438 Pressurisation and low pressure pneumatic systems

ED Decision 2003/2/RM

1 *Strength*

1.1 Compliance with CS 25.1309(b) in relation to leakage in ducts and components will be achieved if it is shown that no hazardous effect will result from any single burst or excessive leakage.

1.2 Each element (ducting and components) of a system, the failure of which is likely to endanger the aeroplane or its occupants, should satisfy the most critical conditions of Table 1.

TABLE 1

Conditions 1	Conditions 2
1·5 P_1 at T_1	3·0 P_1 at T_1
1·33 P_2 at T_2	2·66 P_2 at T_2
1·0 P_3 at T_3	2·0 P_3 at T_3
–	1·0 P_4 at T_4

P_1 = the most critical value of pressure encountered during normal functioning.

T_1 = the combination of internal and external temperatures which can be encountered in association with pressure P_1.

P_2 = the most critical value of pressure corresponding to a probability of occurrence 'reasonably probable'.

T_2 = the combination of internal and external temperatures which can be encountered in association with pressure P_2.

P_3 = the most critical value of pressure corresponding to a probability of occurrence 'remote'.

T_3 = the combination of internal and external temperatures which can be encountered in association with pressure P_3.

P_4 = the most critical value of pressure corresponding to a probability of occurrence 'extremely remote'.

T_4 = the combination of internal and external temperatures which can be encountered in association with pressure P_4.

1.3 After being subjected to the conditions given in column 1 of Table 1, and on normal operating conditions being restored, the element should operate normally and there should be no detrimental permanent distortion.

1.4 The element should be capable of withstanding the conditions given in column 2 of Table 1 without bursting or excessive leakage. On normal operating conditions being restored, correct functioning of the element is not required.

1.5 The element should be capable of withstanding, simultaneously with the loads resulting from the temperatures and pressures given in the Table, the loads resulting from –

a. Any distortion between each element of the system and its supporting structures.

b. Environmental conditions such as vibration, acceleration and deformation.

1.6 The system should be designed to have sufficient strength to withstand the handling likely to occur in operation (including maintenance operations).

2 *Tests*

2.1 *Static tests*. Each element examined under 1.2 should be static-tested to show that it can withstand the most severe conditions derived from consideration of the temperatures and pressures given in the Table. In addition, when necessary, sub-systems should be tested to the most severe conditions of 1.2 and 1.5. The test facility should be as representative as possible of the aircraft installation in respect of these conditions.

2.2 *Endurance tests*. When failures can result in hazardous conditions, elements and/or sub-systems should be fatigue-tested under representative operating conditions that simulate complete flights to establish their lives.

CS 25.1439 Protective breathing equipment

ED Decision 2003/2/RM

(a) Protective breathing equipment must be installed for use of appropriate crewmembers. Such equipment must be located so as to be available for use in compartments accessible in flight.

(b) For protective breathing equipment required by CS 25.1439(a) or by the Operating Regulations, the following apply:

(1) The equipment must be designed to protect the appropriate crewmember from smoke, carbon dioxide, and other harmful gases while on flight deck duty or while combating fires.

(2) The equipment must include –

(i) Masks covering the eyes, nose and mouth, or

(ii) Masks covering the nose and mouth, plus accessory equipment to cover the eyes.

(3) Equipment, including portable equipment, while in use must allow communication with other crewmembers. Equipment available at flight crew assigned duty stations must enable the flight crew to use radio equipment.

(4) The part of the equipment protecting the eyes may not cause any appreciable adverse effect on vision and must allow corrective glasses to be worn.

(5) Each dispensing equipment must supply protective oxygen of 15 minutes duration at a pressure altitude of 2438 m (8000 ft) with a respiratory minute volume of 30 litres per minute BTPD. The equipment and system must be designed to prevent any leakage to the inside of the mask and any significant increase in the oxygen content of the local ambient atmosphere. (See AMC 25.1439(b)(5).)

(6) The equipment must meet the requirements of CS 25.1441.

AMC 25.1439(b)(5) Protective breathing equipment

ED Decision 2003/2/RM

1 If a demand system is used, a supply of 300 litres of free oxygen at 21°C (70°F) and 760 mm Hg pressure is considered to be of 15 minutes duration at the prescribed altitude and minute volume.

2 Any other system such as a continuous flow system is acceptable provided that it does not result in any significant increase in the oxygen content of the local ambient atmosphere above that which would result from the use of a demand oxygen system.

3 A system with safety over-pressure would be an acceptable means of preventing leakage.

4 A continuous flow system of the closed circuit rebreather type is an acceptable system.

CS 25.1441 Oxygen equipment and supply

ED Decision 2003/2/RM

(a) If certification with supplemental oxygen equipment is requested, the equipment must meet the requirements of this paragraph and CS 25.1443 through 25.1453.

(b) The oxygen system must be free from hazards in itself, in its method of operation, and in its effect upon other components.

(c) There must be a means to allow the crew to readily determine, during flight, the quantity of oxygen available in each source of supply.

(d) The oxygen flow rate and the oxygen equipment for aeroplanes for which certification for operation above 12192 m (40 000 ft) is requested must be approved. (See AMC 25.1441(d).)

AMC 25.1441(d) Oxygen equipment and supply

ED Decision 2003/2/RM

In assessing the required oxygen flow rates and equipment performance standards, consideration should be given to the most critical cabin altitude/time-history following any failure, not shown to be Extremely Improbable, which will result in the loss of cabin pressure taking into account the associated emergency procedures.

CS 25.1443 Minimum mass flow of supplemental oxygen

ED Decision 2003/2/RM

(a) If continuous flow equipment is installed for use by flight-crew members, the minimum mass flow of supplemental oxygen required for each crew member may not be less than the flow required to maintain, during inspiration, a mean tracheal oxygen partial pressure of 149 mmHg when breathing 15 litres per minute, BTPS, and with a maximum tidal volume of 700 cm^3 with a constant time interval between respirations.

(b) If demand equipment is installed for use by flight-crew members, the minimum mass flow of supplemental oxygen required for each crew member may not be less than the flow required to maintain, during inspiration, a mean tracheal oxygen partial pressure of 122 mmHg, up to and including a cabin pressure altitude of 10668 m (35 000 ft), and 95% oxygen between cabin pressure altitudes of 10668 m (35 000) and 12192 m (40 000 ft), when breathing 20 litres per minute BTPS. In addition, there must be means to allow the crew to use undiluted oxygen at their discretion.

(c) For passengers and cabin crew members, the minimum mass flow of supplemental oxygen required for each person at various cabin pressure altitudes may not be less than the flow required to maintain, during inspiration and while using the oxygen equipment (including masks) provided, the following mean tracheal oxygen partial pressures:

(1) At cabin pressure altitudes above 3048 m (10 000 ft) up to and including 5639 m (18,500 ft), a mean tracheal oxygen partial pressure of 100 mmHg when breathing 15 litres per minute, BTPS, and with a tidal volume of 700 cm^3 with a constant time interval between respirations.

(2) At cabin pressure altitudes above 5639 m (18 500 ft) up to and including 12192 m (40,000 ft), a mean tracheal oxygen partial pressure of 83·8 mmHg when breathing 30 litres per minute, BTPS, and with a tidal volume of 1100 cm^3 with a constant time interval between respirations.

(d) If first-aid oxygen equipment is installed, the minimum mass flow of oxygen to each user may not be less than 4 litres per minute, STPD. However, there may be a means to decrease this flow to not less than 2 litres per minute, STPD, at any cabin altitude. The quantity of oxygen required is based upon an average flow rate of 3 litres per minute per person for whom first-aid oxygen is required.

(e) If portable oxygen equipment is installed for use by crew members, the minimum mass flow of supplemental oxygen is the same as specified in sub-paragraph (a) or (b) of this paragraph, whichever is applicable.

CS 25.1445 Equipment standards for the oxygen distributing system

ED Decision 2003/2/RM

(a) When oxygen is supplied to both crew and passengers, the distribution system must be designed for either –

(1) A source of supply for the flight crew on duty and a separate source for the passengers and other crew members; or

(2) A common source of supply with means to separately reserve the minimum supply required by the flight crew on duty.

(b) Portable walk-around oxygen units of the continuous flow, diluter demand, and straight demand kinds may be used to meet the crew or passenger breathing requirements.

CS 25.1447 Equipment standards for oxygen dispensing units

ED Decision 2003/2/RM

If oxygen-dispensing units are installed, the following apply:

(a) There must be an individual dispensing unit for each occupant for whom supplemental oxygen is to be supplied. Units must be designed to cover the nose and mouth and must be equipped with a suitable means to retain the unit in position on the face. Flight crew masks for supplemental oxygen must have provisions for the use of communication equipment.

(b) If certification for operation up to and including 7620 m (25 000 ft) is requested, an oxygen supply terminal and unit of oxygen dispensing equipment for the immediate use of oxygen by each crew member must be within easy reach of that crew member. For any other occupants the supply terminals and dispensing equipment must be located to allow use of oxygen as required by the operating rules.

(c) If certification for operation above 7620 m (25 000 ft) is requested, there must be oxygen dispensing equipment meeting the following requirements (See AMC 25.1447(c)):

(1) There must be an oxygen-dispensing unit connected to oxygen supply terminals immediately available to each occupant, wherever seated. If certification for operation above 9144 m (30 000 ft) is requested, the dispensing units providing the required oxygen flow must be automatically presented to the occupants before the cabin pressure altitude exceeds 4572 m (15 000 ft) and the crew must be provided with a manual means to make the dispensing units immediately available in the event of failure of the automatic system. The total number of dispensing units and outlets must exceed the number of seats by at least 10%. The extra units must be as uniformly distributed throughout the cabin as practicable. (See AMC 25.1447(c)(1).)

(2) Each flight-crew member on flight deck duty must be provided with demand equipment. In addition, each flight-crew member must be provided with a quick-donning type of oxygen dispensing unit, connected to an oxygen supply terminal, that is immediately available to him when seated at his station, and this is designed and installed so that it (see AMC 25.1447(c)(2)) –

(i) Can be placed on the face from its ready position, properly secured, sealed, and supplying oxygen upon demand, with one hand within 5 seconds and without disturbing eyeglasses or causing delay in proceeding with emergency duties; and

(ii) Allows, while in place, the performance of normal communication functions.

(3) There must be at least two outlets and units of dispensing equipment of a type similar to that required by sub-paragraph (c)(1) of this paragraph in all other compartments or work areas that may be occupied by passengers or crew members during flight, i.e. toilets, washrooms, galley work areas, etc.

(4) Portable oxygen equipment must be immediately available for each cabin crewmember. (See AMC 25.1447(c)(4).)

AMC 25.1447(c) Equipment standards for oxygen dispensing units

ED Decision 2003/2/RM

Where Operational Regulations do not require all passengers to be provided with oxygen, (c)(3) and (c)(4) may not apply.

AMC 25.1447(c)(1) Equipment standards for oxygen dispensing units

ED Decision 2003/2/RM

1 When oxygen masks are presented, oxygen should be supplied to the mask but without flow.

2 Oxygen flow from the mask should be initiated automatically on pulling the mask to the face.

3 Facilities for manual presentation by a crewmember should be provided on each dispensing unit.

4 Indication of the operation of the automatic presentation system should be provided at the appropriate flight-crew station.

5 The design of the automatic presentation system should take into account that when the landing field altitude is less than 610 m (2000 feet) below the normal preset automatic

presentation altitude, the automatic presentation altitude may be reset to landing field altitude plus 610 m (2000 feet).

AMC 25.1447(c)(2) Equipment standards for oxygen dispensing units

ED Decision 2003/2/RM

Unless it is required that the pilot at the control is wearing his mask and breathing oxygen while the altitude exceeds 7620 m (25 000 feet), the design of the flight-crew masks and their stowages should be such that each mask can be placed in position and put into operation in not more than five seconds, one hand only being used, and will thereafter remain in position, both hands being free.

AMC 25.1447(c)(4) Equipment standards for oxygen dispensing units

ED Decision 2003/2/RM

1 The equipment should be so located as to be within reach of the cabin crewmembers while seated and restrained at their seat stations.

2 The mask/hose assembly should be already connected to the supply source, and oxygen should be delivered with no action being required except turning it on and donning the mask.

3 Where a cabin crewmember's work area is not within easy reach of the equipment provided at his seat station, an additional unit should be provided at the work area.

CS 25.1449 Means for determining use of oxygen

ED Decision 2003/2/RM

There must be a means to allow the crew to determine whether oxygen is being delivered to the dispensing equipment.

CS 25.1450 Chemical oxygen generators

ED Decision 2003/2/RM

(a) For the purpose of this paragraph, a chemical oxygen generator is defined as a device, which produces oxygen, by chemical reaction.

(b) Each chemical oxygen generator must be designed and installed in accordance with the following requirements:

(1) Surface temperature developed by the generator during operation may not create a hazard to the aeroplane or to its occupants.

(2) Means must be provided to relieve any internal pressure that may be hazardous.

(c) In addition to meeting the requirements in sub-paragraph (b) of this paragraph, each portable chemical oxygen generator that is capable of sustained operation by successive replacement of a generator element must be placarded to show –

(1) The rate of oxygen flow, in litres per minute;

(2) The duration of oxygen flow, in minutes, for the replaceable generator element; and

(3) A warning that the replaceable generator element may be hot, unless the element construction is such that the surface temperature cannot exceed 37.8°C (100°F).

CS 25.1453 Protection of oxygen equipment from rupture

ED Decision 2003/2/RM

(a) Each element of the system must have sufficient strength to withstand the maximum pressures and temperatures in combination with any externally applied load, arising from consideration of limit structural loads that may be acting on that part of the system in service.

(b) Oxygen pressure sources and pipe lines between the sources and shut-off means must be –

(1) Protected from unsafe temperatures; and

(2) Located where the probability and hazard of rupture in a crash landing are minimised.

AMC 25.1453 Protection of oxygen equipment from rupture

ED Decision 2003/2/RM

1 Parts of the system subjected to high oxygen pressure should be kept to a minimum and should be remote from occupied compartments. Where such parts are installed within occupied compartments they should be adequately protected from accidental damage.

2 Each container, component, pipe and coupling should have sufficient strength to withstand a pressure equivalent to not less than the maximum working pressure acting on that part of the system when multiplied by the appropriate Proof and Ultimate factors given in Table 1. The maximum working pressure includes tolerances of any pressure limiting means and possible pressure variations in the normal operating modes. Account should also be taken of the effects of temperature up to the maximum anticipated temperature to which the system may be subjected. Transient or surge pressures need not be considered except where these exceed the maximum working pressure multiplied by 1·10.

TABLE 1

Systems Element	Proof Factor	Ultimate Factor
Containers	1·5	2·0
Flexible hoses	2·0	4·0
Pipes and couplings	1·5	3·0
Other components	1·5	2·0

3 Each source should be provided with a protective device (e.g. rupture disc). Such devices should prevent the pressure from exceeding the maximum working pressure multiplied by 1·5.

4 Pressure limiting devices (e.g. relief valves), provided to protect parts of the system from excessive pressure, should prevent the pressures from exceeding the applicable maximum working pressure multiplied by 1·33 in the event of malfunction of the normal pressure controlling means (e.g. pressure reducing valve).

5 The discharge from each protective device and pressure limiting device should be vented overboard in such a manner as to preclude blockage by ice or contamination, unless it can be shown that no hazard exists by its discharge within the compartment in which it is installed. In assessing whether such hazard exists consideration should be given to the quantity and discharge rate of the oxygen released, the volume of the compartment into which it is discharging, the rate of ventilation within the compartment and the fire risk due to the installation of any potentially flammable fluid systems within the compartment.

6 In addition to meeting the requirements of CS 25.1453, oxygen containers may have to be approved in accordance with national regulations.

NOTES:

1 The proof pressure should not cause any leakage or permanent distortion.

2 The ultimate pressure should not cause rupture but may entail some distortion.

CS 25.1455 Draining of fluids subject to freezing

ED Decision 2003/2/RM

If fluids subject to freezing may be drained overboard in flight or during ground operation, the drains must be designed and located to prevent the formation of hazardous quantities of ice on the aeroplane as a result of the drainage.

CS 25.1457 Cockpit voice recorders

ED Decision 2003/2/RM

(a) Each cockpit voice recorder required by the operating rules must be approved and must be installed so that it will record the following:

(1) Voice communications transmitted from or received in the aeroplane by radio.

(2) Voice communications of flight-crew members on the flight deck.

(3) Voice communications of flight-crew members on the flight deck, using the aeroplane's interphone system.

(4) Voice or audio signals identifying navigation or approach aids introduced into a headset or speaker.

(5) Voice communications of flight-crew members using the passenger loudspeaker system, if there is such a system and if the fourth channel is available in accordance with the requirements of sub-paragraph (c)(4)(ii) of this paragraph.

(b) The recording requirements of sub-paragraph (a)(2) of this paragraph must be met by installing a cockpit-mounted area microphone, located in the best position for recording voice communications originating at the first and second pilot stations and voice communications of other crew members on the flight deck when directed to those stations. The microphone must be so located and, if necessary, the pre-amplifiers and filters of the recorder must be so adjusted or supplemented, that the intelligibility of the recorded communications is as high as practicable when recorded under flight cockpit noise conditions and played back. Repeated aural or visual playback of the record may be used in evaluating intelligibility.

(c) Each cockpit voice recorder must be installed so that the part of the communication or audio signals specified in sub-paragraph (a) of this paragraph obtained from each of the following sources is recorded on a separate channel:

(1) For the first channel, from each boom, mask, or hand-held microphone, headset, or speaker used at the first pilot station.

(2) For the second channel, from each boom, mask, or hand-held microphone, headset, or speaker used at the second pilot station.

(3) For the third channel, from the cockpit-mounted area microphone.

(4) For the fourth channel, from –

(i) Each boom, mask, or hand-held microphone, headset or speaker used at the stations for the third and fourth crew members; or

(ii) If the stations specified in sub-paragraph (c)(4)(i) of this paragraph are not required or if the signal at such a station is picked up by another channel, each microphone on the flight deck that is used with the passenger loudspeaker system if its signals are not picked up by another channel.

(5) As far as is practicable all sounds received by the microphones listed in sub-paragraphs (c)(1), (2) and (4) of this paragraph must be recorded without interruption irrespective of the position of the interphone-transmitter key switch. The design must ensure that sidetone for the flight crew is produced only when the interphone, public address system or radio transmitters are in use.

(d) Each cockpit voice recorder must be installed so that –

(1) It receives its electric power from the bus that provides the maximum reliability for operation of the cockpit voice recorder without jeopardising service to essential or emergency loads;

(2) There is an automatic means to simultaneously stop the recorder and prevent each erasure feature from functioning, within 10 minutes after crash impact; and

(3) There is an aural or visual means for pre-flight checking of the recorder for proper operation.

(e) The record container must be located and mounted to minimise the probability of rupture of the container as a result of crash impact and consequent heat damage to the record from fire. In meeting this requirement, the record container must be as far aft as practicable, but may not be where aft mounted engines may crush the container during impact. However, it need not be outside of the pressurised compartment.

(f) If the cockpit voice recorder has a bulk erasure device, the installation must be designed to minimise the probability of inadvertent operation and actuation of the device during crash impact.

(g) Each recorder container must –

(1) Be either bright orange or bright yellow;

(2) Have reflective tape affixed to its external surface to facilitate its location under water; and

(3) Have an underwater locating device, when required by the operating rules, on or adjacent to the container which is secured in such a manner that they are not likely to be separated during crash impact.

AMC 25.1457 Cockpit voice recorders

ED Decision 2006/005/R

In showing compliance with CS 25.1457, the applicant should take account of EUROCAE document No. ED56 'Minimum Operational Performance Requirement for Cockpit Voice Recorder System', as referred to in ETSO-C123a.

[Amdt 25/2]

CS 25.1459 Flight recorders

ED Decision 2003/2/RM

(a) Each flight recorder required by the operating rules must be installed so that –

(1) It is supplied with airspeed, altitude, and directional data obtained from sources that meet the accuracy requirements of CS 25.1323, 25.1325 and 25.1327, as appropriate;

(2) The vertical acceleration sensor is rigidly attached, and located longitudinally either within the approved centre of gravity limits of the aeroplane, or at a distance forward or aft of these limits that does not exceed 25% of the aeroplanes mean aerodynamic chord;

(3) It receives its electrical power from the bus that provides the maximum reliability for operation of the flight recorder without jeopardising service to essential or emergency loads;

(4) There is an aural or visual means for pre-flight checking of the recorder for proper recording of data in the storage medium (see AMC 25.1459(a)(4));

(5) Except for recorders powered solely by the engine-driven electrical generator system, there is an automatic means to simultaneously stop a recorder that has a data erasure feature and prevent each erasure feature from functioning, within 10 minutes after crash impact; and

(6) There is a means to record data from which the time of each radio transmission either to or from ATC can be determined.

(b) Each non-ejectable record container must be located and mounted so as to minimise the probability of container rupture resulting from crash impact and subsequent damage to the record from fire. In meeting this requirement the record container must be located as far aft as practicable, but need not be aft of the pressurised compartment, and may not be where aft-mounted engines may crush the container upon impact. (See AMC 25.1459(b).)

(c) A correlation must be established between the flight recorder readings of airspeed, altitude, and heading and the corresponding readings (taking into account correction factors) of the first pilot's instruments. The correlation must cover the airspeed range over which the aeroplane is to be operated, the range of altitude to which the aeroplane is limited, and 360° of heading. Correlation may be established on the ground as appropriate.

(d) Each recorder container must –

(1) Be either bright orange or bright yellow;

(2) Have reflective tape affixed to its external surface to facilitate its location under water; and

(3) Have an underwater locating device, when required by the operating rules of this chapter, on or adjacent to the container which is secured in such a manner that they are not likely to be separated during crash impact.

(e) Any novel or unique design or operational characteristics of the aircraft must be evaluated to determine if any dedicated parameters must be recorded on flight recorders in addition to or in place of existing requirements.

AMC 25.1459(a)(4) Flight recorders

ED Decision 2003/2/RM

An acceptable means of compliance would be to provide a combination of system monitors and built-in test functions, which would detect and indicate the following:

a. Loss of electrical power to the flight recorder system.

b. Failure of the data acquisition and processing stages.

c. Failure of the recording medium and/or drive mechanism.

d. Failure of the recorder to store the data in the recording medium as shown by checks of the recorded data including, as reasonably practicable for the storage medium concerned, correct correspondence with input data.

AMC 25.1459(b) Flight recorders

ED Decision 2003/2/RM

1 The phrase 'as far aft as practicable' should be interpreted as a position sufficiently aft as to be consistent with reasonable maintenance access and in a position to minimise the probability of damage from crash impact and subsequent fire.

2 The container should remain attached to the local structure under normal, longitudinal and transverse accelerations of at least 10 g.

CS 25.1461 Equipment containing high-energy rotors

ED Decision 2003/2/RM

(a) Equipment containing high energy rotors must meet sub-paragraph (b), (c) or (d) of this paragraph.

(b) High energy rotors contained in equipment must be able to withstand damage caused by malfunctions, vibration, abnormal speeds, and abnormal temperatures. In addition –

(1) Auxiliary rotor cases must be able to contain damage caused by the failure of high energy rotor blades; and

(2) Equipment control devices, systems, and instrumentation must reasonably ensure that no operating limitations affecting the integrity of high-energy rotors will be exceeded in service.

(c) It must be shown by test that equipment containing high-energy rotors can contain any failure of a high-energy rotor that occurs at the highest speed obtainable with the normal speed control devices inoperative.

(d) Equipment containing high energy rotors must be located where rotor failure will neither endanger the occupants nor adversely affect continued safe flight.

SUBPART G – OPERATING LIMITATIONS AND INFORMATION

CS 25.1501 General

ED Decision 2003/2/RM

(a) Each operating limitation specified in CS 25.1503 to 25.1533 and other limitations and information necessary for safe operation must be established.

(b) The operating limitations and other information necessary for safe operation must be made available to the crew members as prescribed in CS 25.1541 to 25.1587.

(c) Supplementary information must be made available to the operator of each aeroplane as prescribed in CS 25.1591.

AMC 25.1501 Operating Limitations and Information - General

ED Decision 2003/2/RM

The limitations and information established in accordance with Subpart G should be only those which are within the competence of the flight crew to observe, and should relate only to those situations (including pre- and post-flight) with which a flight crew member might reasonably be concerned.

OPERATING LIMITATIONS

CS 25.1503 Airspeed limitations: general

ED Decision 2003/2/RM

When airspeed limitations are a function of weight, weight distribution, altitude, or Mach number, limitations corresponding to each critical combination of these factors must be established.

CS 25.1505 Maximum operating limit speed

ED Decision 2003/2/RM

The maximum operating limit speed (V_{MO}/M_{MO}, airspeed or Mach number, whichever is critical at a particular altitude) is a speed that may not be deliberately exceeded in any regime of flight (climb, cruise, or descent), unless a higher speed is authorised for flight test or pilot training operations. V_{MO}/M_{MO} must be established so that it is not greater than the design cruising speed V_C and so that it is sufficiently below V_D/M_D or V_{DF}/M_{DF}, to make it highly improbable that the latter speeds will be inadvertently exceeded in operations. The speed margin between V_{MO}/M_{MO} and V_D/M_D or V_{DF}/M_{DF} may not be less than that determined under CS 25.335(b) or found necessary during the flight tests conducted under CS 25.253.

CS 25.1507 Manoeuvring speed

ED Decision 2003/2/RM

The manoeuvring speed must be established so that it does not exceed the design manoeuvring speed V_A determined under CS 25.335(c).

CS 25.1511 Flap extended speed

ED Decision 2003/2/RM

The established flap extended speed V_{FE} must be established so that it does not exceed the design flap speed V_F chosen under CS 25.335(e) and 25.345, for the corresponding wing-flap positions and engine powers.

CS 25.1513 Minimum control speed

ED Decision 2003/2/RM

The minimum control speed V_{MC} determined under CS 25.149 must be established as an operating limitation.

CS 25.1515 Landing gear speeds

ED Decision 2003/2/RM

(a) The established landing gear operating speed or speeds, V_{LO}, may not exceed the speed at which it is safe both to extend and to retract the landing gear, as determined under CS 25.729 or by the flight characteristics. If the extension speed is not the same as the retraction speed, the two speeds must be designated as $V_{LO(EXT)}$ and $V_{LO(RET)}$, respectively.

(b) The established landing gear extended speed V_{LE} may not exceed the speed at which it is safe to fly with the landing gear secured in the fully extended position, and that determined under CS 25.729.

CS 25.1516 Other speed limitations

ED Decision 2003/2/RM

Any other limitation associated with speed must be established.

CS 25.1517 Rough air speed, V_{RA}

ED Decision 2005/006/R

(a) A rough air speed, V_{RA} for use as the recommended turbulence penetration air speed, and a rough air Mach number M_{RA}, for use as the recommended turbulence penetration Mach number, must be established to ensure that likely speed variation during rough air encounters will not cause the overspeed warning to operate too frequently.

(b) At altitudes where V_{MO} is not limited by Mach number, in the absence of a rational investigation substantiating the use of other values, V_{RA} must be less than V_{MO} - 35 KTAS.

(c) At altitudes where V_{MO} is limited by Mach number, M_{RA} may be chosen to provide an optimum margin between low and high speed buffet boundaries.

[Amdt 25/1]

CS 25.1519 Weight, centre of gravity and weight distribution

ED Decision 2003/2/RM

The aeroplane weight, centre of gravity, and weight distribution limitations determined under CS 25.23 to CS 25.27 must be established as operating limitations. (See AMC 25.1519.)

AMC 25.1519 Weight, centre of gravity and weight distribution

ED Decision 2003/2/RM

A statement of the maximum certificated take-off and landing weights, and the minimum certificated take-off and landing weights, should be established, together with the maximum ramp or taxying weight, the maximum zero-fuel weight and any other fixed limit on weight, including weight limitations resulting from such factors as brake energy limits, tyre limits, etc., established in accordance with the airworthiness standards of CS-25. Any limitations on aeroplane loading associated with the stated weight limitations (e.g. fuel load and usage, maximum fuel for landing) should be considered.

CS 25.1521 Powerplant limitations

ED Decision 2003/2/RM

(a) *General.* The powerplant limitations prescribed in this paragraph must be established so that they do not exceed the corresponding limits for which the engines or propellers are type certificated and do not exceed the values on which compliance with any other requirement of this Code is based.

(b) Reserved.

(c) *Turbine engine installations*. Operating limitations relating to the following must be established for turbine engine installations:

(1) Horsepower, torque or thrust, rpm, gas temperature, and time for –

(i) Maximum continuous power or thrust (relating to augmented or unaugmented operation as applicable).

(ii) Take-off power or thrust (relating to augmented or unaugmented operation as applicable).

(2) Fuel designation or specification.

(3) Any other parameter for which a limitation has been established as part of the engine type certificate except that a limitation need not be established for a parameter that cannot be exceeded during normal operation due to the design of the installation or to another established limitation.

(d) *Ambient temperature.* An ambient temperature limitation (including limitations for winterisation installations, if applicable) must be established as the maximum ambient atmospheric temperature established in accordance with CS 25.1043(b).

AMC 25.1521 Power-plant limitations

ED Decision 2003/2/RM

1 In furnishing limitations, consideration should be given to the following. The list does not necessarily include all the items to be considered for a given aeroplane.

a. Rotational speeds.

b. Exhaust and/or turbine gas temperature.

c. Oil temperatures and pressures.

d. Fuel temperatures and pressures.

e. Water and/or water methanol usage.

f. Anti-icing.

g. Specifications of approved fuels, oils and additives.

2 Other parameters, e.g. time, altitude, ambient temperatures, airspeed, may be necessary in defining power-plant limitations.

3 All operating phases should be considered in establishing the power-plant limitations.

CS 25.1523 Minimum flight crew

ED Decision 2003/2/RM

The minimum flight crew must be established (see AMC 25.1523) so that it is sufficient for safe operation, considering –

(a) The workload on individual crew members;

(b) The accessibility and ease of operation of necessary controls by the appropriate crew member; and

(c) The kind of operation authorised under CS 25.1525.

The criteria used in making the determinations required by this paragraph are set forth in Appendix D.

AMC 25.1523 Minimum flight crew

ED Decision 2003/2/RM

1 Both the number and identity of the flight crew members should be established.

2 If the minimum flight crew varies with the kinds of operation to which the aeroplane is limited, the approved number and identity of the flight crew members should be stated for each kind of operation.

3 If a particular flight crew member's station has to be occupied at all material times, this should be stated when specifying the minimum flight crew.

CS 25.1525 Kinds of operation

ED Decision 2003/2/RM

The kinds of operation to which the aeroplane is limited are established by the category in which it is eligible for certification and by the installed equipment.

CS 25.1527 Ambient air temperature and operating altitude

ED Decision 2003/2/RM

The extremes of the ambient air temperature and operating altitude for which operation is allowed, as limited by flight, structural, powerplant, functional, or equipment characteristics, must be established.

CS 25.1529 Instructions for Continued Airworthiness

ED Decision 2003/2/RM

Instructions for Continued Airworthiness in accordance with Appendix H must be prepared.

CS 25.1531 Manoeuvring flight load factors

ED Decision 2003/2/RM

Load factor limitations, not exceeding the positive limit load factors determined from the manoeuvring diagram in CS 25.333(b), must be established.

CS 25.1533 Additional operating limitations

ED Decision 2003/2/RM

(a) Additional operating limitations must be established as follows:

(1) The maximum take-off weights must be established as the weights at which compliance is shown with the applicable provisions of this CS-25 (including the take-off climb provisions of CS 25.121(a) to (c), for altitudes and ambient temperatures).

(2) The maximum landing weights must be established as the weights at which compliance is shown with the applicable provisions of this CS-25 (including the landing and approach climb provisions of CS 25.119 and 25.121(d) for altitudes and ambient temperatures).

(3) The minimum take-off distances must be established as the distances at which compliance is shown with the applicable provisions of this CS-25 (including the provisions of CS 25.109 and 25.113, for weights, altitudes, temperatures, wind components, runway surface conditions (dry and wet) and runway gradients) for smooth, hard-surfaced runways. Additionally, at the option of the applicant, wet runway take-off distances may be established for runway surfaces that have been grooved or treated with a porous friction course and may be approved for use on runways where such surfaces have been designed, constructed and maintained in a manner acceptable to the Agency. (See AMC 25.1533(a)(3).)

(b) The extremes for variable factors (such as altitude, temperature, wind, runway gradients) are those at which compliance with the applicable provisions of this CS-25 is shown.

AMC 25.1533(a)(3) Take-off distances on runways with a grooved or porous friction course surface

ED Decision 2003/2/RM

Runways that have a grooved or porous friction course (PFC) surface can maintain a significantly higher wheel-braking coefficient of friction when wet than can runways that lack such surface treatments. Where take-off distance information specifically applicable to such runways has been established, this higher level of friction has been taken into account in accordance with CS 25.109(d). It is therefore essential that such information is only approved for use on runways having a grooved or PFC surface that has been constructed and maintained to acceptable standards. FAA AC 150/532012B 'Measurement, Construction and Maintenance of Skid-Resistant Airport Paving Surfaces' provides guidance on such standards. Where such operational approval has not been obtained, the performance information applicable to a smooth, hard-surfaced runway must be used.

MARKINGS AND PLACARDS

CS 25.1541 General

ED Decision 2003/2/RM

(a) The aeroplane must contain –

(1) The specified markings and placards; and

(2) Any additional information, instrument markings, and placards required for the safe operation if there are unusual design, operating, or handling characteristics.

(b) Each marking and placard prescribed in sub-paragraph (a) of this paragraph –

(1) Must be displayed in a conspicuous place; and

(2) May not be easily erased, disfigured, or obscured.

AMC 25.1541 Markings and Placards - General

ED Decision 2003/2/RM

Markings or placards should be placed close to or on (as appropriate) the instrument or control with which they are associated. The terminology and units used should be consistent with those used in the Flight Manual. The units used for markings and placards should be those that are read on the relevant associated instrument.

CS 25.1543 Instrument markings; general

ED Decision 2003/2/RM

For each instrument –

(a) When markings are on the cover glass of the instrument, there must be means to maintain the correct alignment of the glass cover with the face of the dial; and

(b) Each instrument marking must be clearly visible to the appropriate crew member.

AMC 25.1543 Instrument Markings - General

ED Decision 2003/2/RM

The markings should be such that the instrument remains easily readable with the minimum of confusion.

CS 25.1545 Airspeed limitation information

ED Decision 2003/2/RM

The airspeed limitations required by CS 25.1583(a) must be easily read and understood by the flight crew. (See AMC 25.1545.)

AMC 25.1545 Airspeed limitation information

ED Decision 2003/2/RM

A placard could be used when the speed limitation can be a simple presentation (e.g. an IAS speed up to a given altitude and an indicated Mach number thereafter). A complex speed limitation should be presented automatically on the instrument, (e.g. by means of an additional moving pointer).

CS 25.1547 Magnetic direction indicator

ED Decision 2003/2/RM

(a) A placard meeting the requirements of this paragraph must be installed on, or near, the magnetic direction indicator.

(b) The placard must show the calibration of the instrument in level flight with the engines operating.

(c) The placard must state whether the calibration was made with radio receivers on or off.

(d) Each calibration reading must be in terms of magnetic heading in not more than 45° increments.

CS 25.1549 Powerplant instruments

ED Decision 2003/2/RM

For each required powerplant instrument, as appropriate to the type of instrument:

(a) Each maximum and, if applicable, minimum safe operating limit must be marked with a red radial or a red line;

(b) Each normal operating range must be marked with a green arc or green line, not extending beyond the maximum and minimum safe limits;

(c) Each take-off and precautionary range must be marked with a yellow arc or a yellow line; and

(d) Each engine or propeller speed range that is restricted because of excessive vibration stresses must be marked with red arcs or red lines.

AMC 25.1549 Powerplant instruments

ED Decision 2003/2/RM

1 Powerplant instrument range markings are intended to indicate to flight crew members, at a glance, that the powerplant operation is being accomplished in a safe or desirable, undesirable but allowable, or unsafe region. The colour red indicates an unsafe condition which requires immediate and precise action by the flight crew. The use of multiple red lines should be avoided to minimise confusion.

2 A precautionary range is a range where limited operation is permissible, as indicated in the aeroplane Flight Manual. Experience has shown that to satisfy the requirement for clearly visible markings, the following minimum dimensions should be observed.

a. *Red, yellow and green lines*. 1.3 mm (0·05 inch) wide and 7.6 mm (0·3 inch) long.

b. *Red, yellow and green arcs and areas*. 2.5 mm (0·1 inch) wide, length as required.

CS 25.1551 Oil quantity indicator

ED Decision 2003/2/RM

Each oil quantity indicating means must be marked to indicate the quantity of oil readily and accurately.

CS 25.1553 Fuel quantity indicator

ED Decision 2003/2/RM

If the unusable fuel supply for any tank exceeds 3.8 l (one gallon), or 5% of the tank capacity, whichever is greater, a red arc must be marked on its indicator extending from the calibrated zero reading to the lowest reading obtainable in level flight.

CS 25.1555 Control markings

ED Decision 2003/2/RM

(a) Each cockpit control, other than primary flight controls and controls whose function is obvious, must be plainly marked as to its function and method of operation.

(b) Each aerodynamic control must be marked under the requirements of CS 25.677 and 25.699.

(c) For powerplant fuel controls –

(1) Each fuel tank selector control must be marked to indicate the position corresponding to each tank and to each existing cross feed position;

(2) If safe operation requires the use of any tanks in a specific sequence, that sequence must be marked on, or adjacent to, the selector for those tanks; and

(3) Each valve control for each engine must be marked to indicate the position corresponding to each engine controlled.

(d) For accessory, auxiliary, and emergency controls –

(1) Each emergency control (including each fuel jettisoning and fluid shutoff control) must be coloured red; and

(2) Each visual indicator required by CS 25.729(e) must be marked so that the pilot can determine at any time when the wheels are locked in either extreme position, if retractable landing gear is used.

CS 25.1557 Miscellaneous markings and placards

ED Decision 2003/2/RM

(a) *Baggage and cargo compartments and ballast location*. Each baggage and cargo compartment, and each ballast location must have a placard stating any limitations on contents, including weight, that are necessary under the loading requirements. However, underseat compartments designed for the storage of carry-on articles weighing not more than 9 kg (20 lb) need not have a loading limitation placard. (See AMC 25.1557(a).)

(b) *Powerplant fluid filler openings.* The following apply:

(1) Fuel filler openings must be marked at or near the filler cover with –

(i) The word ‘fuel’;

(ii) Reserved.

(iii) The permissible fuel designations; and

(iv) For pressure fuelling systems, the maximum permissible fuelling supply pressure and the maximum permissible defuelling pressure.

(2) Oil filler openings must be marked at or near the filler cover with the word ‘oil’.

(3) Augmentation fluid filler openings must be marked at or near the filler cover to identify the required fluid.

(c) *Emergency exit placards.* Each emergency exit placard must meet the requirements of CS 25.811.

(d) *Doors*. Each door that must be used in order to reach any required emergency exit must have a suitable placard stating that the door is to be latched in the open position during take-off and landing.

AMC 25.1557(a) Baggage and Cargo Compartment and Ballast Location

ED Decision 2003/2/RM

If baggage, cargo compartment and ballast location limitations are complex and involve, for example, additional limitations on loading intensity and distribution, it is acceptable to provide a placard making reference to the appropriate document.

CS 25.1561 Safety equipment

ED Decision 2003/2/RM

(a) Each safety equipment control to be operated by the crew in emergency, such as controls for automatic liferaft releases, must be plainly marked as to its method of operation.

(b) Each location, such as a locker or compartment, that carries any fire extinguishing, signalling, or other lifesaving equipment must be marked accordingly.

(c) Stowage provisions for required emergency equipment must be conspicuously marked to identify the contents and facilitate the easy removal of the equipment.

(d) Each liferaft must have obviously marked operating instructions.

(e) Approved survival equipment must be marked for identification and method of operation.

CS 25.1563 Airspeed placard

ED Decision 2003/2/RM

A placard showing the maximum airspeeds for wingflap extension for the take-off, approach, and landing positions must be installed in clear view of each pilot.

AEROPLANE FLIGHT MANUAL

CS 25.1581 General

ED Decision 2003/2/RM

(a) *Furnishing information.* An aeroplane Flight Manual must be furnished with each aeroplane, and it must contain the following:

(1) Information required by CS 25.1583 to 25.1587.

(2) Other information that is necessary for safe operation because of design, operating, or handling characteristics.

(3) Any limitation, procedure, or other information established as a condition of compliance with the applicable noise standards.

(b) *Approved information.* Each part of the manual listed in CS 25.1583 to 25.1587 that is appropriate to the aeroplane, must be furnished, verified, and approved, and must be segregated, identified, and clearly distinguished from each unapproved part of that manual.

(c) Reserved.

(d) Each aeroplane Flight Manual must include a table of contents if the complexity of the manual indicates a need for it.

AMC 25.1581 Aeroplane Flight Manual

ED Decision 2006/005/R

1 *PURPOSE*

The primary purpose of the European Aviation Safety Agency (EASA) approved Aeroplane Flight Manual (AFM) is to provide an authoritative source of information considered to be necessary for safely operating the aeroplane. This Acceptable Means of Compliance (AMC) identifies the information that must be provided in the AFM under the airworthiness regulations and provides guidance as to the form and content of the approved portion of an AFM. Although mandatory terms such as 'shall' or 'must' are used in this AMC, because the AMC method of compliance is not mandatory, these terms apply only to applicants who seek to demonstrate compliance by following the specific procedures described in this AMC.

2 *RELATED CERTIFICATION SPECIFICATIONS (CS)*

Paragraphs 25.1581, 25.1583, 25.1585, 25.1587 and 251591 of the CS and noise regulations identify the information that must be provided in the AFM. Paragraph 25.1581 also requires 'other information that is necessary for safe operation because of the design, operating, or handling characteristics'. Additional related requirements are the applicable operational rules.

3 *DEFINITIONS*

a. *Aeroplane Flight Manual (AFM)*. A EASA approved document that contains information (limitations, operating procedures, performance information, etc.) necessary to operate the aeroplane at the level of safety established by the aeroplane's certification basis.

b. *Flight Crew Operating Manual (FCOM)*. A document developed by a manufacturer that describes, in detail, the characteristics and operation of the aeroplane or its systems.

c. *Safe Operation*. For the purposes of this AMC, safe operation means operation of the aeroplane in a manner that is mandatory, or is recommended, for compliance with the airworthiness requirements.

d. *Limitation*. For the purposes of this AMC, an AFM limitation establishes the approved bounds of operation of the aeroplane or its systems.

e. *Aeroplane Flight Manual Warnings, Cautions and Notes*. The AFM contains operating procedures, techniques, etc. that may be categorised as warnings, cautions and notes as defined in the following paragraphs. The following definitions should not be confused with the colour requirements prescribed in CS 25.1322 for warning, caution and advisory lights installed in the cockpit.

(1) Warning. An operating procedure, technique, etc. that may result in personal injury or loss of life if not followed.

(2) Caution. An operating procedure, technique, etc. that may result in damage to equipment if not followed.

(3) Note. An operating procedure, technique, etc. considered essential to emphasise. Information contained in notes may also be safety related.

f. *Procedure*. A procedure is a step-by-step method used to accomplish a specific task.

(1) Emergency. A procedure requiring immediate flight crew action to protect the aeroplane and occupants from serious harm.

(2) Abnormal or Non-normal. A procedure requiring flight crew action, due to failure of a system or component, to maintain an acceptable level of airworthiness for continued safe flight and landing.

(3) Normal. A procedure associated with systems that are functioning in their usual manner.

g. *Revision*. A change to the content of the AFM through the addition, deletion, or modification of material.

h. *Appendices and Supplements*. Additions to the AFM that may or may not supersede existing AFM material.

(1) Appendix. An addition to the AFM to cover the installation of optional equipment or specific operations (engine inoperative ferry, reduced thrust or power takeoff, configuration deviation list (CDL), etc.).

(2) Supplement. Information that supersedes or is in addition to the basic AFM resulting from the issuance of a supplemental type certificate (STC), or from approved changes to AFM limitations, procedures, or performance information without an STC.

4 *DISCUSSION*

The AFM provides information to safely operate the aeroplane under normal, abnormal and emergency conditions. The AFM contains the operating limitations, operating procedures, and performance information for the aeroplane.

a. *Historically*, the AFM was often the only source of information available to the flight crew for safely operating a transport category aeroplane. Consequently, the form and content of these earlier AFMs were designed to meet the needs of the flight crew. For example,

very detailed operating procedures were presented in a form easily used in the cockpit (e.g., checklist format).

b. *As more complex equipment was incorporated into transport* category aeroplanes, many aeroplane and equipment manufacturers developed separate operating manuals intended for on-board use by the flight crew. These operating manuals are generically referred to within this AMC as Flight Crew Operating Manuals (FCOM). By locating information such as cockpit checklists, systems descriptions and detailed procedures in the FCOM, the bulk and complexity of the AFM can be kept manageable. As a result, the AFM for many transport aeroplanes has evolved into more of a reference document than a document used frequently by the flight crew. In recognition of the usefulness and convenience provided by these FCOMs, the normal operating procedures information in the AFMs for these transport category aeroplanes should be limited to those procedures considered 'peculiar' to the operation of that aeroplane type.

c. *The AFM should be limited to the smallest practicable amount* of material that is appropriate for the intended operation of the aeroplane. In general, the systems descriptions and procedures provided in the AFM for most large transport aeroplanes should be limited to that which is uniquely related to aeroplane safety or airworthiness. Since the AFM still serves as the sole operating manual for many small transport category aeroplanes, these AFMs should continue to contain detailed operating information.

d. *Widespread use of computers* has led to the capability of replacing or supplementing parts of the conventional paper AFM with a computerized version. Guidance for EASA approval of computerized AFM information is presented in Appendix 1 of this AMC.

5 *GENERAL GUIDELINES*

Previously approved AFMs are unaffected by this AMC. When such manuals are amended, the concepts of this AMC should be applied, if practicable.

a. *Segregation of Approved and Unapproved Material*. Paragraph 25.1581 of the CS requires that EASA approved information be segregated, identified, and clearly distinguished from each unapproved part of the AFM. Unapproved material should be labelled that it is for guidance information only, and must be located in a different section than the approved material.

b. *Provisions for approval* of and revisions to the AFM are as follows:

(1) Each page of the approved portion should bear the notation, 'EASA Approved', a unique date of approval or revision number for that page, the aeroplane type or model designation, and an appropriate document identification number. For AFM pages produced by an STC applicant, both the STC applicant's name and the aeroplane type or model designation should appear.

(2) All AFMs, revisions, appendices, and supplements requiring EASA approval must be submitted to the EASA. A log of currently approved pages in the AFM should be furnished in each copy of the manual. A location should be provided on the log for the approval signature and the approval date. Alternatively, a specific approval page can be furnished for the approval signature and the current revision status.

(3) When revisions are incorporated, a means of indicating those parts of the information that have been changed should be provided. For example, vertical bars placed in the margin of the revised page may be used for this purpose. Each revised

page should be identified in the same manner as the original, with the exception of the new date and revision notation, as applicable.

(4) Appendices and supplements should be incorporated in the AFM in a separate section appropriately identified at the end of the basic manual. Supplements should normally follow appendices. Format, page identification, organisation, and other details should be the same as that of the basic manual.

(5) Appendices and supplements may be developed by the TC holder, STC applicant, or the operator, and should be submitted for evaluation and approval according to EASA certification procedures. Usually, the TC holder writes appendices to the AFM, and an STC applicant or operator supplements the AFM. However, an STC applicant may elect to produce a completely new AFM.

(6) It may be necessary to provide a greater amount of descriptive and procedural information in appendices and supplements than that appearing in the basic AFM, if the appendix or supplement is the only source for this information.

c. *The AFM may address either a single aeroplane model* (i.e., hardware build) or several models of the same aeroplane type. If information is provided for more than one model, the AFM should clearly identify which operating limitations, operating procedures, and performance information apply to each model (e.g., by model designation, serial number, etc.). If the AFM format is such that different pages apply to different aeroplanes, the log of pages should clearly identify the specific pages of the AFM that apply to each aeroplane.

d. *Any required weight and balance information* that is not a physical part of the AFM, must be incorporated by reference in the Limitations Section of the AFM per CS 25.1583(c) and AMC 25.1583(c).

e. *Aeroplane Flight Manual Units.* The AFM units should be consistent with the flight deck instrumentation, placards, and other measuring devices for a particular aeroplane. The AFM should be given in SI units (International System of Units). This does not apply to the units of measurement related to:

– airspeed: knots.

– altitude: feet.

– vertical speed: feet per minute.

– navigational distance: nautical miles.

Systems of units must be properly identified and presented. Multiple scales may be used on AFM charts to show different units, e.g., pounds and kilograms. However, the charts should be constructed to minimise any misunderstanding or interpolation problems by, for example, using a transfer scale so that principal values of each of the units are on major grid lines or index marks.

6 *AEROPLANE FLIGHT MANUAL CONTENTS*

The AFM should be divided into the following sections, as appropriate for the specific aeroplane type or model. For purposes of standardisation, it is recommended that the sequence of sections and of items within sections follow this outline.

a. *Introductory Section*. The intent of the introductory material is to identify the revision status and control the applicability and content of the AFM. The normal content of this section is as follows:

(1) Title page. The title page should include the manufacturer's name, the aeroplane model designation, the commercial designation or name, if any, assigned to the aeroplane, and an appropriate document identification number. Provision should be made for the inclusion of the approval date of the basic document and the signature, name, and title of the EASA approving official.

(2) Log of revisions.

(3) Revision highlights, if appropriate.

(4) Log of pages (including all information necessary to determine which pages apply to a given aeroplane model (i.e., hardware build)).

(5) Compatibility listing of appendices and supplements produced by the aeroplane manufacturer.

(6) Table of contents. (Alternatively, a table of contents for each section may be placed at the beginning of that section.)

(7) List of abbreviations.

b. *Limitations Section*. The purpose of the Limitations Section is to present those operating limitations appropriate to the aeroplane model as established in the course of the type certification process in determining compliance with the applicable certification requirements (e.g., CS-25 and noise regulations). The operating limitations must be expressed in mandatory, not permissive, language. The terminology used in the AFM must be consistent with the relevant regulatory language. Limitations prescribed by operating rules may be incorporated as appropriate.

(1) Weight Limitations. A statement of the maximum certificated take-off and landing weights must be provided. The maximum taxi/ramp weight, maximum zero-fuel weight, and any other fixed limit on weight, should also be included. Any limitations on aeroplane loading associated with the stated weight limitations must be included in the AFM or addressed in a separate weight and balance document. Separate take-off and landing weight limits may be listed corresponding to each applicable constraint (e.g., structural or noise requirements, customer option, etc.), if the instructions in the Limitations Section clearly state that the most restrictive of these take-off and landing weight limitations represent the maximum certified weights.

(i) For those performance weight limits that vary with runway length, altitude, temperature and other variables, the variation in weight limitations may be presented as graphs in the Performance Section of the AFM and included as limitations by specific reference in the Limitations Section.

(ii) Only one set of noise limited take-off and landing weights may be established for a specific aeroplane model (i.e., hardware build).

(2) Noise limitations. An aeroplane model (i.e., hardware build) may not be identified as complying with the requirements of more than one noise stage level at a time. The operating limitations contained in the Limitations Section of the AFM should comply with the noise certification criteria for that stage. If the noise certification status of an aeroplane model is upgraded to a more stringent stage level the AFM

must either be revised or supplemented, whichever is appropriate, to include only information appropriate to the new stage level.

(i) Landing Flap Restriction. An operating limitation preventing the use of an approved landing flap setting to comply with noise requirements can only be established under the airworthiness requirements or as a voluntary design change. A statement must be added to the Limitations Section to preclude using that landing flap setting for normal operations. Emergency procedures may, however, continue to use the restricted flap setting. A placard must be placed in the aeroplane and appropriate other means must be installed (e.g., crushable guard on the restricted portion of the flap selection quadrant), to prevent using the restricted flap setting for normal operations.

(ii) Reduced and Derated Take-off Thrust or Power. Noise certification levels are determined at the maximum all-engines operating take-off thrust or power. Reduced and derated thrust or power are not changes that would invalidate the noise certification status of the aeroplane, provided the full rated take-off thrust or power remains approved for that aeroplane.

(3) Operating Limitations. The extremes of the operational variables, including any appropriate descriptions for which compliance with the certification requirements has been shown and for which the AFM data have been approved, should be listed with respect to the following:

(i) Operations.

(A) Maximum take-off, landing and zero-fuel weight limits.

(B) Minimum in-flight weight.

(C) Minimum and maximum pressure altitude for which operation is limited for each flight phase (take-off, en route and landing). Further altitude limitations caused by changes to structure, powerplant, equipment characteristics or flight characteristics (e.g. due to failures) should be provided.

(D) Ambient atmospheric temperature (maximum and minimum).

(E) Minimum control speed. (This information may be located in the Performance Section of the AFM, with cross-reference in the Limitations Section.)

(F) Maximum tailwind. The maximum allowable tailwind component for take-off and landing should normally be limited to 10 knots. If airworthiness approval has been granted for take-off and landing in tailwinds greater than 10 knots, the AFM should provide the limiting tailwind value, accompanied by a statement such as the following:

The capability of this aeroplane has been satisfactorily demonstrated for take-off and manual landing with tailwinds up to knots. This finding does not constitute operational approval to conduct take-offs or landings with tailwind components greater than 10 knots.

(G) Maximum demonstrated crosswind.

(1) If the maximum demonstrated crosswind is considered to be limiting for either take-off or landing, the crosswind limitation must be stated in the Limitations Section. If the crosswind value is considered to be limiting for one type of operation (e.g. autoland) but not for another, the crosswind limitation may also state the specific operations to which it applies.

(2) If the maximum crosswind value demonstrated under CS 25.237 is considered to be not limiting for both take-off and landing operations, the demonstrated crosswind value may be presented in a section other than the Limitations Section.

(H) Runway slope. Limitations and performance information should normally be restricted to runway gradients up to ±2 percent. Limitations for runway slopes greater than ±2 percent may be approved if the effects of the larger slopes are validated in a manner acceptable to the EASA.

(I) Runway surface type (smooth and hard-surfaced, or any other type approved).

(ii) En route Flight Paths.

(A) Maximum altitude.

(B) Ambient atmospheric temperature (maximum and minimum).

(C) In accordance with CS 25.123(a), en route flight path data must be presented in the AFM for all altitudes and temperatures within the operating envelope limits of the aeroplane.

(4) Centre-of-Gravity Limits. Indicate by using tables or graphs the centre of gravity (c.g.) limits for taxi, take-off and landing, zero fuel weight, and for any other practicably separable flight condition. As appropriate, data should be provided for a range of weights between the maximum taxi weight and the minimum in-flight weight. The data should be shown with the appropriate gear position for the phase of flight, and gear effects on the centre-of-gravity should be built into the charts. Data may be presented for gear-extended position only if there is proper accounting for the moment change due to gear retraction. The c.g. limits should be presented in terms of either the distance-from-a specified datum or as a percentage of the mean aerodynamic chord (MAC). Either the location of the datum or the length and location of the MAC should be stated, as applicable. If alternate forward c.g. limits have been approved, these limits should be presented and appropriately identified.

(5) Fuel Limitations. A statement in accordance with CS 25.1585(d) must be included. Operating limitations due to fuel related considerations (e.g. lateral fuel imbalance, fuel management, fuel temperature) and their effects on altitude limitations (e.g. boost pump(s) inoperative, fuel type) should also be provided.

(6) Powerplant Limitations.

(i) State all limitations necessary to ensure safe operation of engines, propellers, fuel systems and powerplant accessories, including auxiliary powerplants (see CS 25.1521 and 25J1521). If the use of reduced or derated take-off thrust or power is requested, then any associated operating or

performance limitations should be included in accordance with acceptable reduced and derated takeoff thrust or power procedures. Limitations related to the use of reverse thrust in flight or on the ground should be clearly identified. Any engine limitations associated with operations in adverse weather (heavy rain, hail, turbulence, lightning, etc.) should be specified. Any icing conditions that may impact the normal operation of the engine should also be defined.

(ii) Because engine ice protection is critical to safety in icing conditions, a statement should be included in the Limitations Section that the engine ice protection must be on during all ground and flight operations when icing conditions exist or are anticipated. The following definition of icing conditions should also be included in the Limitations Section:

Icing conditions – Icing conditions exist when outside air temperature (OAT) on the ground and for take-off, or total air temperature (TAT) in flight, is 10 degrees C or below and visible moisture in any form is present (such as clouds, fog with visibility of one mile or less, rain, snow, sleet or ice crystals).

Icing conditions also exist when the OAT on the ground and for take-off is 10 degrees C or below when operating on ramps, taxiways, or runways where surface snow, ice, standing water or slush may be ingested by the engines or freeze on engines, nacelles or engine sensor probes.

(7) Airspeed and Mach Number Limitations. All airspeed limitations should be in terms of indicated airspeed and in units of knots or Mach number, where applicable and should be consistent with cockpit indication. If airspeed or Mach number limitations vary with altitude or loading conditions, such variation must be shown. Limitations data must be included for at least the following:

(i) Maximum operating limit speed, V_{MO}/M_{MO}, together with a statement that this speed limit may not be deliberately exceeded in any regime of flight (climb, cruise or descent), unless a higher speed is authorised for flight test or pilot training. The last phrase (unless a higher speed is authorised for flight test or pilot training) may be omitted at the option of the applicant.

(ii) Manoeuvring speed, V_A, together with a statement that full application of longitudinal, directional and lateral flight controls, as well as manoeuvres that involve angles-of-attack near the stall, should be confined to speeds below this value.

(iii) Flap-extended speed, V_{FE}, for each approved flap and high lift device position.

(iv) Landing gear operating speed, V_{LO}, together with a statement that this is the maximum speed at which it is safe to extend or retract the landing gear. If different speeds are established for extension and retraction, each speed should be listed and defined.

(v) Landing gear extended speed, V_{LE}, together with a statement that this is the maximum speed at which the aeroplane can be safely flown with the landing gear extended and locked.

(vi) Any other limiting speeds for extendable devices other than the landing gear, should be included as applicable (e.g. spoilers, thrust reversers, landing lights, ram air turbine (RAT), windows that may be opened in flight, etc.).

(8) Manoeuvring Load Factor Limitations. The positive and negative flight manoeuvring limit load factors (expressed in terms of 'g's') for which the structure is approved should be provided, including any variation with the position of the high lift devices.

(9) Kinds of Operations. This subsection should contain a statement similar to the following:

This aeroplane is certificated as a Large Turbine-powered Aeroplane and is eligible for the following kinds of operations when the appropriate instruments and equipment required by the airworthiness and operating requirements are installed and approved and are in operable condition.

The approval status of the following should be stated:

(i) Operation in atmospheric icing conditions.

(ii) Extended over-water operation.

(iii) Extended range operations with two-engine aeroplanes (ETOPS).

(iv) Day and night operations under visual flight rules (VFR).

(v) Operations under instrument flight rules (IFR).

(vi) Backing the aeroplane with reverse thrust.

(vii) Category I, II or III operations.

(10) Minimum Flight Crew. The minimum number of flight crew approved to operate the aeroplane should be stated.

(11) Systems and Equipment Limitations. All limitations applicable to systems and equipment installations that are considered necessary for safe operation must be included. Examples of systems and equipment installations for which limitations may be appropriate include, but are not limited to, electrical, hydraulic, pneumatic, cabin pressurisation, air conditioning, airframe fire protection, airframe ice protection, auto braking systems, autopilot, autothrottle, flight director, yaw damper, anti-skid devices, performance or flight management system (including software identifier if displayable), etc.

(12) Miscellaneous Limitations. This item should include any information not specified under the preceding headings but necessary, as a limitation, to ensure safe operation of the aeroplane.

c. *Operating Procedures Section*. The Operating Procedures Section of the AFM should contain, as a minimum, the essential information, peculiar to the particular aeroplane type design, that is needed for safe operation under normal and other-than-normal conditions. Procedures not directly related to airworthiness, or not under control of the flight crew, should not be included in the AFM. A notation similar to the following should be placed at the beginning of the Operating Procedures Section.

The operating procedures contained in this manual have been developed and recommended by the manufacturer and approved by the EASA for use in operating this aeroplane. These procedures are provided as guidance and should not be construed as

prohibiting the operator from developing equivalent procedures in accordance with the applicable operating rules.

(1) Procedures Categories. Information should be presented for normal, non-normal, and emergency procedures and be distinctly separated. Procedural tasks considered to be recall or immediate action items, which must be accomplished from memory, should be clearly identified.

(2) Format. Procedures should be presented either in a narrative or a checklist format, depending upon the intended use of the AFM.

(i) Narrative. This format is acceptable if sources of procedures information other than the AFM are intended for flight crew use (e.g. Flight Crew Operating Manual (FCOM)). Procedures presented in this format should be drafted in a manner from which the needed sequence can be easily established.

(ii) Checklist. This format should be used if the AFM is intended to be used directly by the flight crew for operating procedures.

(3) Procedures Development. Prior to initial type certification, it is essential to verify that proposed procedures are technically valid and operationally practicable. It is recognised that such procedures may have had only limited operational exposure at the time of certification and may need to be revised based on service experience.

(4) Procedures Content. The content and level of detail for the normal, non-normal, and emergency procedures provided in the AFM should be based on the intended use of the AFM. More information and detail should be provided in AFMs that are intended to be the flight crew's primary sources of operating procedures information than for AFMs that are not intended to be used directly by the flight crew.

(i) General. Classifying an operating procedure as normal or as non-normal should reflect whether the aeroplane's systems are operating normally. Procedures associated with failed or inoperative systems should be considered non-normal. Procedures associated with glideslope deviation, ground proximity warning, all engines operating go-around, turbulent air penetration, etc, which do not occur routinely, should be placed in the normal procedures subsection, provided the aeroplane's systems are operating normally.

(ii) Other Sources of Procedures Information. The flight crew of large transport category aeroplanes typically use other sources of operating procedures information other than the AFM. Examples of other sources of operating procedures information include manufacturer- or operatorproduced operating manuals, Quick Reference Handbooks (QRH), System Pilot's Guides and Emergency or Abnormal Checklists. For these aeroplanes, items such as cockpit checklists, systems descriptions, and the associated normal procedures should not be presented in the AFM if they are provided in other documents acceptable to the Agency. Normal procedures that are necessary for safe operation should be presented in the AFM, but the remaining normal procedures should be placed in the manufacturer produced FCOM (or other acceptable sources of operating procedures information). The non-

normal procedures section of the AFM for these types of aeroplanes should include, as a minimum, procedures dictated by the aeroplane's system and failure modes, and may also include those emergency procedures listed in paragraph 6.c(5) of this AMC. Whenever procedures are provided in another source rather than the AFM, a statement should be placed in the appropriate procedures section of the AFM referencing where the detailed procedures information can be found.

(iii) AFM Used Directly. For those manufacturers and operators that do not produce other sources of procedures information (generally manufacturers and operators of small transports), the AFM is the only source of this information. In this circumstance, the AFM operating procedures information must be comprehensive and include information such as cockpit checklists, systems descriptions and associated procedures.

(5) Emergency Procedures. The emergency procedures can be included either in a dedicated section of the AFM or in the non-normal procedures section. In either case, this section should include the procedures for handling any situation that is in a category similar to the following:

(i) Engine failure with severe damage or separation.

(ii) Multiple engine failure.

(iii) Fire in flight.

(iv) Smoke control. The following should be clearly stated in the AFM:

After conducting the fire or smoke procedures, land at the nearest suitable airport, unless it is visually verified that the fire has been extinguished.

(v) Rapid decompression.

(vi) Emergency descent.

(vii) Uncommanded reverser deployment in flight.

(viii) Crash landing or ditching.

(ix) Emergency evacuation.

d. *Performance Section.* This section of the AFM contains the performance limitations, other data required by the applicable airworthiness and noise regulations, and any special conditions that may apply. Additional information may be provided to assist the operator in complying with the operating rules or for implementing unique operational needs. The performance information should cover the operating range of weights, altitudes, temperatures, aeroplane configurations, thrust ratings, and any other operational variables stated as operational performance limitations for the aeroplane. If additional performance information is presented for operation at a specific altitude, these performance data should cover a pressure altitude span of at least the specific altitude ±1,000 feet to allow an operator to adequately account for pressure altitude variations. It is recommended that such data be included as a separate section or appendix to the AFM.

(1) General. Include all descriptive information necessary to identify the configuration and conditions for which the performance data are applicable. Such information should include the type or model designations of the aeroplane and its engines, the approved flap settings, a brief description of aeroplane systems and equipment

that affect performance (e.g. anti-skid, automatic spoilers, etc.), and a statement indicating whether such systems and equipment are operative or inoperative. This section should also include definitions of terms used in the Performance Section (e.g. IAS, CAS, ISA, configuration, net flight path, icing conditions, etc.), plus calibration data for airspeed (flight and ground), Mach number, altimeter, air temperature and other pertinent information. The airspeed, altitude and air temperature calibration data should be presented for the following ranges:

(i) Take-off configurations:

(A) Ground run, 0·8 V_{1MIN} to V_{2MAX}.

(B) In-flight, V_{2MIN} to V_{FE}.

(ii) Approach and landing configurations:

(A) Approach, 1·13 V_{SR} to V_{FE}.

(B) Landing, 1·23 V_{SR} to V_{FE}.

(iii) En route configuration:

(A) Airspeed and Altimeter: For the take-off/take-off path altitude range, 1.18 V_{SR} to V_{MO}/M_{MO}.

(B) Airspeed and Altimeter: For higher altitudes, from 1.18 V_{SR} or the speed for 1·2 g buffet onset margin, whichever is lower, to V_{MO}/M_{MO}.

(C) Mach Number: From the lowest useful Mach number (generally in the range of 0·4 to 0·5) to M_{MO}.

(D) Total or Static Air Temperature: For Mach numbers corresponding to the speed ranges noted in paragraphs 6.d(1)(iii)(A) and (B) of this AMC.

(2) Performance Procedures. The procedures, techniques and other conditions associated with the AFM performance data should be included. Performance procedures may be presented as a performance subsection or in connection with a particular performance graph. In the latter case, a comprehensive listing of the conditions associated with the particular performance data may serve as procedures if sufficiently complete. The AFM should also include adequate information to enable the operator to show compliance with CS 25.1001 for each take-off.

(3) Thrust or Power Setting. Thrust or power settings should be provided for at least take-off, maximum continuous, and go-around thrust or power, along with the thrust or power setting procedures necessary to obtain the performance shown in the AFM. These data should be shown for each applicable thrust or power setting parameter. If backing the aeroplane by reverse thrust is proposed, thrust setting limits should be established considering contaminated runway, foreign object damage potential, environmental control system impact, aeroplane weight and c.g., cockpit visibility, effect of braking, etc.

(4) Minimum Control Speeds. Minimum control speed data may be located in the Performance Section with a reference in the Limitations Section as to its location.

(5) Stall Speeds. The stall speeds established in showing compliance with certification requirements should be presented, together with associated conditions. Data

should be presented in terms of calibrated airspeed. If applicable, stall speed increments with accreted ice must be provided.

(6) Take-off Speeds. The take-off speeds, V_1, V_R and V_2 must be presented in the AFM, together with the associated conditions. These speeds should be presented in units consistent with cockpit instrument indication. V_1 and V_R speeds should be based upon ground effect calibration data while V_2 speeds should be based upon free air calibration data. The take-off speeds associated with minimum control speeds and the maximum energy absorption capability of the brakes should be included. At the option of the applicant, the AFM may also include the V_1 speeds associated with unbalanced field lengths. At all conditions and aeroplane configurations represented in the AFM (i.e., at all altitudes, temperatures, weights, winds, runway slopes, flap settings, etc.), the accuracy of the V_1 speed should either 1) be within 1·5 knots of the V_1 speed used to calculate the take-off and accelerate-stop distances, or 2) not cause an increase to these distances of more than the greater of 100 feet or the incremental increase resulting from a 1·5 knots variation in V_1 speed.

(7) Take-off and Accelerate-Stop Distances. Take-off and accelerate-stop distances, complying with CS 25.105, 25.109, 25.113, and 25.1591 must be provided. At the option of the applicant, and with concurrence by the Agency, additional data may be provided for operations on other than smooth hard-surfaced runways.

(8) Climb Limited Take-off Weight. The climb limited take-off weight, which is the most limiting weight showing compliance with CS 25.121(a), (b) and (c), must be provided.

(9) Miscellaneous Take-off Weight Limits. Take-off weight limits should be shown for any equipment or characteristic of the aeroplane that imposes an additional take-off weight restriction (e.g. maximum tyre speed, maximum brake energy, fuel jettison consideration, inoperative system(s), etc.).

(10) Take-off Climb Performance. For the prescribed take-off climb aeroplane configurations, the climb gradients must be presented, together with associated conditions. The scheduled climb speed(s) should be included.

(11) Take-off Flight Path Data. Take-off flight paths, or performance information necessary to construct such paths, together with the associated conditions (e.g. procedures and speeds), should be presented for each approved take-off configuration. The presentation should include all flight path segments existing between the end of the take-off distance and the end of the take-off path, as defined in CS 25.111(a). Such data must be based upon net performance, as prescribed in CS 25.115(b) and (c).

(12) En route Flight Path Data. The net flight path gradient data prescribed in CS 25.123 must be presented, together with the associated conditions (e.g. procedures and speeds). Data must be presented for one- and two-engine-inoperative cases, as applicable, throughout the approved operating altitude and temperature envelope.

(13) Climb Limited Landing Weight. The climb limiting landing weight, which is the most limiting weight showing compliance with CS 25.119 and 25.121(d), should be provided.

(14) Miscellaneous Landing Weight Limits. Landing weight limits for any equipment or characteristic of the aeroplane configuration that imposes an additional landing weight restriction should be shown.

(15) Approach Climb Performance. For the approach climb configuration, the climb gradients (CS 25.121(d)) and weights up to maximum take-off weight (CS 25.1587(b)(3)) should be presented, together with associated conditions (e.g. procedures and speeds). The effects of ice accretion on unprotected portions of the airframe and the effects of engine and wing ice protection systems should be provided.

(16) Landing Climb Performance. Data for the landing climb configuration should be presented in a manner similar to that described for the approach configuration above.

(17) Landing Approach Speeds. The scheduled speeds associated with the approved landing distances and operational landing runway lengths (see paragraph 6.d(18) of this AMC) should be presented, together with associated conditions.

(18) Landing Distance. The landing distance from a height of 50 ft must be presented either directly or with the factors required by the operating regulations, together with associated conditions and weights up to the maximum take-off weight. For all landplanes, landing distance data must be presented for smooth, dry, hard-surfaced runways for standard day temperatures. With concurrence by the Agency, additional data may be presented for other temperatures and runway slopes within the operational limits of the aeroplane, or for operations on other than smooth, hard-surfaced runways. For all weather operations, additional landing performance data may be required.

(19) Performance Limits and Information Variation with Centre of Gravity. If performance information, (e.g. buffet boundary) is not presented for the most critical c.g. condition, the AFM should present the effect of variation with c.g.

(20) Noise Data. The noise levels achieved during type certification in accordance with the applicable noise requirements should be presented, together with associated conditions and with the following note:

> No determination has been made by the EASA that the noise levels of this aircraft are or should be acceptable or unacceptable for operation at, into or out of any airport.

The noise levels achieved during type certification should be included in the AFM and consist of only one take-off, one sideline, and one approach noise level for each aeroplane model (i.e. hardware build). The noise certification standard complied with should accompany the noise level information to indicate the compliance status. Supplementary information (labeled as such) may be added to the AFM concerning noise levels for other configurations or conditions.

(21) Miscellaneous Performance Data. Any performance information or data not covered in the previous items that are required for safe operation because of unusual design features or operating or handling characteristics should be furnished. For example, the maximum quick turn around weight should be provided.

e. *Loading Instructions.* CS 25.1583 requires instructions necessary to ensure loading of the aeroplane within the established limits of weight and centre-of-gravity, and to maintain the loading within such limits in flight to be presented either in the AFM or included in a separate weight and balance document referenced in the AFM Limitations Section. If applicable, the loading instructions must refer to flight procedures that consider the change to the aeroplane's centre of gravity as fuel is consumed.

(1) Loading Instructions Presented in a Separate Document. If the loading instructions are presented in a separate document, the AFM Limitations Section should contain at least the following:

(i) Maximum taxi weight limits.

(ii) Maximum take-off weight limits.

(iii) Maximum landing weight limits.

(iv) Maximum zero fuel weight limits.

(v) Minimum in-flight weight.

(vi) Centre-of-gravity limits.

(vii) Information required to maintain the aeroplane within the above limits.

(2) Weight-and-Balance Data. Documentation of the weight-and-balance material outlined below is normally adequate for aeroplanes with conventional loading and fuel-management techniques. For aeroplanes that require fuel to be redistributed (other than through normal consumption) to maintain loading within prescribed limits, the loading instructions should be expanded as necessary.

(i) Weight Limits. A list and identification of all weight limitations should be included.

(ii) Centre-of-Gravity Limits. The approved centre-of-gravity range, or ranges, should be presented with due accounting for aeroplane configuration (i.e. landing gear position, passenger loading, cargo distribution etc.) such that loading limits can be maintained.

(iii) Dimensions, Datum and MAC. The dimensions and relative location of aeroplane features associated with weighing and loading of the aeroplane and with weight-and-balance computations should be described or illustrated.

(iv) Configuration Checklist or Equipment List. The aeroplane should be defined or described sufficiently to identify the presence or absence of optional systems, features or installations that are not readily apparent. In addition, all other items of fixed or removable equipment included in the empty weight should be listed.

(v) Fuel and Other Liquids. All fuel and other liquids, including passenger service liquids, that are included in the empty weight should be identified and listed, together with the information necessary to enable ready duplication of the particular condition.

(vi) Weighing Computations. Computation of the empty weight and the empty-weight c.g. location should be included.

(vii) Loading Schedule. The loading schedule should be included, if appropriate.

(viii) Loading Instructions. Complete instructions relative to the loading procedure or to the use of the loading schedule should be included.

(ix) Compartment and floor load limits.

7 *CONFIGURATION DEVIATION LIST (CDL)*

Operation of the aeroplane without certain secondary airframe and engines parts is allowed through the use of an approved CDL. The CDL should be included in the AFM as a separate appendix. The following guidance should be followed when preparing the CDL.

a. *The parts or combinations of parts* permitted to be missing, together with the associated performance penalties and other limitations should be determined and presented in the same format as the Master Minimum Equipment List (MMEL).

b. *Unless it can be established* that a zero or negligible performance degradation occurs as a result of a part missing from the aeroplane (see paragraph 8.b of this AMC), a performance penalty should be presented for each part or for each combination of parts.

c. *Performance penalties are normally presented* as weight or percent weight decrements. Equivalent penalties expressed as other parameters are also acceptable. A single performance penalty applicable to all AFM performance limitations may be presented for a missing part or, subject to certain restrictions, performance penalties may be presented for each phase of flight as follows:

(1) Only a single performance penalty for take-off and a single performance penalty for landing will be permitted. For take-off, the penalty shall be the most restrictive of the take-off field length, first, second and final segment climbs, and take-off flight path considerations. For landing, the penalty shall be the most restrictive of approach climb, landing climb, and landing distance considerations.

(2) Only a single weight penalty for en route climb performance, applying to both the one-engineinoperative and two-engine-inoperative cases, as applicable, will be permitted.

(3) The CDL should contain the explanations of take-off performance penalty, landing performance penalty and en route performance penalty, as appropriate for the aeroplane, when individual penalties are used.

d. *General Limitations*. The following information should be presented in the CDL appendix:

(1) When the aeroplane is operated using the CDL, it must be operated in accordance with the limitations specified in the AFM, as amended in the CDL.

(2) The associated limitations must be listed on a placard affixed in the cockpit in clear view of the pilot in command and other appropriate crew member(s).

(3) The pilot in command should be notified of each operation with a missing part(s) by listing the missing part(s) in the flight or dispatch release.

(4) The operator should list in the aeroplane logbook an appropriate notation covering the missing part(s) on each flight.

(5) If an additional part is lost in flight, the aeroplane may not depart the airport at which it landed following this event, until it again complies with the limitations of the CDL. This, of course, does not preclude the issuance of a ferry permit to allow the aeroplane to be flown to a point where the necessary repairs or replacements can be made.

(6) No more than one part for any one system may be missing, unless specific combinations are indicated in the CDL. Unless otherwise specified, parts from different systems may be missing. The performance penalties are cumulative, unless specifically designated penalties are indicated for the combination of missing parts.

(7) No more than three parts that have each been determined to cause a negligible performance degradation may be missing for take-off without applying a performance penalty. When more than three such parts are missing, a performance penalty of either 0·05 percent of the maximum take-off weight or 50 kg, whichever is less, must be applied for take-off, en route, and landing for each missing part.

(8) Take-off performance penalties should be applied to the take-off weights that are limited by performance considerations (i.e. take-off field length, first, second, or, final segment climb, or take-off flight path). If the performance limited take-off weight is greater than the maximum certified take-off weight, the take-off performance penalties should be applied to the maximum certified take-off weight to ensure compliance with the noise requirements.

(9) Landing performance penalties should be applied to the landing weights that are limited by performance considerations (i.e. landing field length, landing climb or approach climb). If the performance limited landing weight is greater than the maximum certified landing weight, the landing performance penalties should be applied to the maximum certified landing weight to ensure compliance with the noise requirements.

(10) En route performance penalties apply only to operations that are limited by the one- or two-engine(s) inoperative en route climb performance.

(11) The numbering and designation of systems in the CDL appendix is based on Air Transport Association (ATA) Specification 100. The parts within each system are identified by functional description and, when necessary, by part numbers.

8 *ACCOUNTABILITY OF PERFORMANCE DEGRADATION RELATIVE TO BOTH MINOR DESIGN CHANGES AND CDL ITEMS*

a. *General*. Whenever a minor change to the type design aerodynamic configuration or a CDL proposal (e.g. installation of wing tip mounted emblem lights, missing flap hinge covers, etc.), has been submitted for EASA approval, the applicable performance degradation needs to be determined. In lieu of a complete flight test analysis to determine the performance degradation, simple criteria are prescribed below for establishing an acceptable level of airworthiness for the affected items.

b. *Criteria*.

(1) Estimated Drag. The aerodynamic drag of the type design change or CDL item should be evaluated. Design changes or CDL items that have no impact on, or actually improve, the aerodynamic drag of the aeroplane are considered to have no performance penalty. In cases where there are quantifiable effects on aerodynamic drag (no matter how small), the drag value should be estimated and then increased by a factor of 2, unless the estimate drag was determined with equivalent conservatism.

(2) Performance Penalty. Performance penalties (usually expressed in kg or percent weight) should be determined for all appropriate performance limitations (take-off, en route and landing) based on the effects of the estimated drag. If the resulting weight penalty is less than the smaller of 0·05 percent of the maximum certified take-off weight or 50 kg, the performance degradation may be considered negligible. The AFM supplement or CDL appendix should identify those type design changes or CDL items that result in a negligible performance degradation. If the performance degradation is not considered negligible, the appropriate performance penalty should be provided as a limitation in the AFM supplement or in the CDL appendix.

[Amdt 25/2]

AMC 25.1581, Appendix 1 Computerised Aeroplane Flight Manual

ED Decision 2006/005/R

1 *PURPOSE*

This appendix presents guidelines for obtaining approval of a computerised version of an AFM that would replace or supplement parts of the conventional paper AFM. These guidelines also apply to computerised AFM appendices and supplements. The criteria provided in the main body of this AMC remain applicable except where modified by this appendix. These guidelines do not cover:

a. Systems used on board the aeroplane during flight.

b. Systems that provide direct input to other aeroplane systems or equipment.

c. Supplementary software or software functions used to prepare documentation suitable for use in the operation of the aeroplane under the applicable operating rules (e.g. airport analysis software).

2 *APPLICABILITY*

This appendix applies to aeroplanes eligible to be certificated to CS 25. The guidelines contained herein pertain to generating and presenting AFM performance information required by CS 25 by means of computer software. This appendix may be amended to include relevant aspects for other EASA approved information that is stored and presented through computer software.

3 *DEFINITIONS*

a. *Computerised AFM*. The computerised AFM software application used in conjunction with the hardware and software environment in which it is installed to generate computerised AFM information.

b. *Computerised AFM Software Application*. The computer programs and data, installation information and operating guide that are used in generating computerised AFM information.

c. *Computerised AFM Information*. The information generated by the EASA approved computerised AFM in lieu of or supplementing parts of the conventional paper AFM.

d. *Software Environment*. The additional computer programs (e.g. operating system) that provide services to the computerised AFM software application to input, process and output the information to the user.

e. *Hardware Environment*. The equipment (e.g. terminal, printer, keyboard, math co-processor, central processing unit, etc.) that enables the operation of the software environment and the computerised AFM software application to input, process and output the information to the user.

f. *Commercial-Off-the-Shelf (COTS) Computer*. A multi-purpose computer (e.g. a standard personal computer) that is available, or can be made available, to all potential users of the respective computerised AFM.

g. *Calculation*. Data generation by means of combination of table-lookup or arithmetic operations.

h. *First Principles Calculation*. A Calculation using basic parameters such as lift, drag, thrust, etc. with the equations of motion.

4 *GENERAL GUIDELINES*

The criteria herein do not affect the status of computerised AFMs that have previously been EASA or JAA approved. When such manuals are amended in the future, the concepts of this appendix should be applied, where practicable.

a. *Official Reference*

(1) The conventional paper portion of the AFM should contain appropriate references about applicability of the EASA approved computerised AFM software application. This reference should be revised each time the EASA approved computerised AFM software application is changed (see paragraph 6.d of this appendix).

(2) The AFM should contain a statement similar to the following:

The computerised AFM replaces or supplements portions of the paper AFM, and is an EASA approved source for that AFM information. Any modification to the EASA approved computerised AFM software application, or subsequent alteration to the generated output, will cancel the airworthiness approval of the information, unless this change was approved by the EASA. This statement applies regardless of any approval notation printed on a generated output.

b. *Approved and Unapproved Information*. Paragraph 25.1581 of the CS requires that the EASA approved information be segregated, identified and clearly distinguished from any unapproved information in the AFM. Therefore, the approval status of generated output should be clearly indicated on the screen and printed on each printout page of any calculated results by indication of:

(1) Approved program version.

(2) Approved data version, if applicable.

(3) Approval status of results with respect to requirement basis of the computation (e.g. FAR/Certification Specifications (CS)).

(4) Applicable certification basis, if the program is capable of generating results for more than one certification basis (e.g. FAR/Certification Specifications (CS)).

(5) Date of output data generation.

c. *Software Usage Aspects*. The applicant should substantiate that the computerised AFM is designed to:

(1) Provide a generated output containing all the information required to be in the conventional paper AFM by CS 25 for the part that is replaced or supplemented by the computerised AFM. This includes all relevant information (e.g. variables used for a specific condition) to determine operating condition and applicability of the generated output.

(2) Provide equivalent or conservative results to that obtained by direct use of a first principles calculation using certified baseline parameters (e.g. lift, drag, thrust).

(3) Preclude calculations that would generate results identified as EASA approved by:

(i) Extrapolating data beyond computational bounds agreed to by the Agency and the applicant; or

(ii) Using unapproved flight test analysis or AFM expansion methods.

(4) Provide at least the standard of transparency (e.g. understanding of performance relations and limitations) that is available from a conventional paper AFM presentation.

(5) Minimise mistakes or misunderstanding by a trained user during data input and interpretation of output.

5 *COMPUTERISED AEROPLANE FLIGHT MANUAL CONTENTS*

a. *General*

(Reserved.)

b. *Limitations Section*

(Reserved.)

c. *Procedures Sections*

(Reserved.)

d. *Performance Section*

(1) The computerised AFM may be used to generate all of the EASA approved performance information required to be in the AFM.

(2) The operating rules require operators to carry, in each transport category aeroplane, either the AFM or an operator-prepared manual that contains all of the information required to be in the AFM. The computerised AFM is not intended for use on board the aeroplane. Thus, any portions of the AFM that are provided only in computerised (i.e. electronic) form may not be used to satisfy these operating requirements. This does not preclude printing out information calculated by the EASA approved computerised AFM and subsequently using the paper printout on board the aeroplane.

(3) Configuration Deviation List (CDL) and Master Minimum Equipment List (MMEL) effects on performance may be included if they are EASA approved and applications are clearly identified on the generated output.

(4) Although the output from the computerised AFM should be usable without adjustment, applying corrective factors that are provided in the paper AFM may be acceptable in the following cases:

(i) CDL or MMEL information.

(ii) Urgent temporary EASA approved revisions made mandatory for safety reasons.

(iii) Any case in which the appropriate data are unavailable from the computerised AFM and it is clear to the user that corrective factors must be applied.

(iv) Supplements produced by STC applicants.

(5) Supplementary performance information may be included in accordance with paragraph 4.b of this appendix (e.g. for operation on runways contaminated with standing water, slush, snow or ice).

(6) The applicant may request EASA approval of supplementary computerised AFM applications (e.g. optimised runway performance). This supplementary software application will not be required by the EASA for type certification.

6 *SOFTWARE INTEGRITY, DEVELOPMENT AND DOCUMENTATION REQUIREMENTS*

The computerised AFM consists of the AFM software application used in conjunction with the hardware and software environment in which it is installed. This paragraph provides guidelines that address the integrity, development process, and documentation requirements of the software.

a. *Software Integrity*

(1) The computation of hazardously misleading primary information such as take-off speeds, landing approach speeds, engine thrust or power, engine limit data or other related aeroplane performance data, should be improbable (as defined in CS 25.1309). The AFM software application should, as far as practicable, be protected from inadvertent, deliberate, or unauthorised alterations. For example, self-check features could be used to provide software verification and protection against deliberate or inadvertent alteration.

(2) The level of integrity established for the computerised AFM is the basis for the software development process and should be addressed in the plan for software aspects of certification (see paragraph 6.b of this appendix).

(3) Each part of the EASA approved AFM software application (e.g. program, data) should bear a unique notation, a unique date, or a revision number.

(4) A means to check the programs and data to avoid undetected failures should be provided (e.g. a checksum routine, tabular data to verify a check case, or provisions for a line-by-line file comparison).

(5) Commercially available software, such as operating systems (e.g. MS-DOS), word-processors and spreadsheets, will not be approved by the EASA. However, this software can be used to run the computerised AFM software application or process (i.e. edit, format, manipulate, etc.) AFM data to produce approved AFM information if:

(i) the applicant demonstrates that the unapproved software does not interfere with the correct functioning of the EASA approved computerised AFM software application;

(ii) the applicant demonstrates that the unapproved software produces reliable results when used with the specified hardware environment and the computerised AFM software application; and

(iii) the applicant specifies, in the paper AFM or a user's guide, the title, manufacturer, and version number of such software. The version number may refer to future versions of the software (e.g. 'Version XX and later') if the verification check performed under paragraph 6.c(1) of this appendix is designed such that improper operation of these later software versions would be detected.

b. *Software Development*. The integrity of the software components of the computerised AFM is achieved through the software development processes used.

(1) The applicant should propose the software development process in the plan for software aspects of certification. The application should document the methods, parameters and allowable range of conditions contained in the computerised AFM. The results obtained from the computerised AFM should be shown to meet all applicable CS 25 requirements. This compliance may be shown using substantiation documentation, demonstrations, or other means mutually agreed to by the Agency and the applicant. The software development process described in AMC 20-115() "Recognition of EUROCAE ED-12()/RTCA DO-178()" is valid, in general, for developing either airborne or ground based software. It represents one acceptable approach, but not the only acceptable approach, for developing software for the computerised AFM. Some of the specific guidance provided in AMC 20-115(), however, may not apply to the computerised AFM.

(2) The applicant should submit a description of the computerised AFM and the plan for software aspects of certification to the Agency for review early in the certification process. This plan proposes the schedule and means by which compliance with the requirements will be achieved and the means by which certification data and supporting records will be made available to the Agency for review.

c. *Hardware and Software Environment*. The computerised AFM software application may be EASA approved independent of the hardware and software environment in which it is installed. A common example of this would be the development of a computerised AFM software application to be run in a commercial-off-the-shelf (COTS) hardware and software environment. The applicant should provide for item (1) as follows, plus either item (2) or (3), as appropriate.

(1) A mechanism, such as an installation utility function or test set, that verifies the proper functioning of the computerised AFM software application in the target software and hardware environment. The verification check should include, but not be limited to, proper functioning with hardware specified in the AFM, including input and output devices, and with resident software, including terminate-to-stay-resident or other control programs such as Microsoft Windows, and with any operating system calls made by the AFM software.

(2) If the computerised AFM is intended for a COTS hardware and software environment, installation information that describes the minimum requirements, including limitations and constraints, for the software and hardware environment.

(3) If the computerised AFM is intended for a specific hardware/software system, installation information that describes the specific hardware and software environment in which the computerised AFM software application must be installed. Additionally, the applicant should provide a configuration management scheme that ensures the hardware and software environment that will be used in

service is identical to the environment specified in the EASA approved installation data.

d. *Revisions to a Computerised AFM Software Application*

(1) Revisions to a EASA approved computerised AFM should be submitted for evaluation and EASA approval in accordance with software development methodology established in paragraph 6.b of this appendix. A log of EASA approved AFM software application parts should be furnished by the applicant. For historical purposes, the applicant should maintain records from which the information from any approved revision level of the computerised AFM can be reproduced, unless none of the affected aeroplanes remain in operational service.

(2) The applicant should submit a description of the proposed changes and an updated plan for software aspects of certification. In addition, the applicant should:

(i) re-assess the software integrity level (paragraph 6.a of this appendix) of the revised computerised AFM;

(ii) demonstrate that revisions do not affect any of the unrevised portions of the computerised AFM; and

(iii) demonstrate that the revisions are compatible with the hardware and software environment intended for the computerised AFM software application.

(3) Revisions to a computerised AFM can be made only by the TC or STC holder of that computerised AFM. The STC applicant may supplement but not revise a TC holder's computerised AFM.

(4) When revisions are incorporated, a means (e.g. document) of indicating those parts of the software that have been changed should be provided.

(5) Each revised software element should be identified in the same manner as the original, with the exception of the new date or revision notation (see paragraph 6.a(3) of this appendix).

e. *Submittal and EASA Approval of Software*

(1) The applicant will be considered the responsible party for all matters pertaining to the computerised AFM software application, including submittal to the Agency and obtaining EASA approval.

(2) The applicant and the Agency shall discuss and agree on the data structures and calculation models.

(3) The applicant should provide any part of the hardware environment necessary for operating the computerised AFM that is not readily available to the Agency.

f. *Documentation Requirements*. Documentation containing the following information should be provided by the applicant to the Agency.

(1) Approval plan that describes the software aspects of certification, including time schedules, an outline of the desired applications, and design objectives for software and data integrity.

(2) Software development plan, including the methods used to accomplish the design objectives.

(3) Software descriptions, including justifications that program structures and calculation models are appropriate to their intended function.

(4) Data verification document, including a description of the scope and depth of the review, analysis, and tests used to determine that the developed software and generated output accurately reflect the aeroplane performance characteristics. This description should include the purpose of each test case and the set of inputs, expected results, test environment and calculated results.

(5) Operating instructions, including all information for proper use of the computerised AFM, installation instructions, and identification of the suitable hardware and software environment.

(6) Software configuration reference, including a log of the approved software elements and a statement that design objectives of the approval plan and compliance with the guidelines of this appendix have been demonstrated.

7 *PROVISIONS FOR EASA POST CERTIFICATION ACCESS TO COMPUTERISED AFM*

In the plan for software aspects of certification, the applicant should propose which components of the computerised AFM will be submitted to the EASA. In cases where the AFM software application can be installed on EASA equipment, the applicant need only provide the computerised AFM software application, which includes the installation data and operating guide. However, if the computerised AFM software application requires a hardware and software environment that is not available to the EASA, the applicant should also provide the EASA with the necessary components to access the AFM software application.

[Amdt 25/2]

AMC 25.1581, Appendix 2 Aeroplane Flight Manual Specification

ED Decision 2003/2/RM

1 *PURPOSE*

This appendix to the AMC 25.1581 is a guideline for preparation of the AFM specification required early in the certification process to allow judgement about acceptability of various peculiarities of the proposed flight manual.

2 *APPLICABILITY*

This acceptable means of compliance applies to aircraft eligible to be certificated to CS 25.

3 *DEFINITIONS* Reserved.

4 *GENERAL GUIDELINES*

Following information should be presented in form of a document:

a. Constructors Name.

b. Contact person: Name, Address, Telephone, Telefax.

c. Aircraft Description, including kinds of operation for which certification is intended.

d. Basic Approval Authority.

e. Certification Basis (e.g. FAR 25 amendment or CS 25 change no.).

f. Flight manual compliance proposal (e.g. FAA AC or EASA AMC etc.).

g. Type of AFM (i.e. multi-regulation).

h. Intended document number.

i. Means of identification for draft pages and revisions thereto.

k. Size of final AFM pages.

l. Example pages:

Title sheet and approval provision

Preface

List of Effective Pages

Page layout, including identification and approval status

m. Units of measure proposed.

n. Amendment system (e.g. temporary revision identification and normal revision identification).

o. Breakdown of the manual (e.g. topics, sequence, dividers).

p. Performance charts layout.

q. Digital performance data proposal, if applicable.

r. References to other information required by the certification basis but not contained in the basic AFM.

The document presented may include more than the proposed amount of information, if deemed necessary.

CS 25.1583 Operating limitations

ED Decision 2005/006/R

(a) *Airspeed limitations.* The following airspeed limitations and any other airspeed limitations necessary for safe operation must be furnished.

(1) The maximum operating limit speed V_{MO}/M_{MO} and a statement that this speed limit may not be deliberately exceeded in any regime of flight (climb, cruise, or descent) unless a higher speed is authorised for flight test or pilot training.

(2) If an airspeed limitation is based upon compressibility effects, a statement to this effect and information as to any symptoms, the probable behaviour of the aeroplane, and the recommended recovery procedures.

(3) The manoeuvring speed V_A and a statement that full application of rudder and aileron controls, as well as manoeuvres that involve angles of attack near the stall, should be confined to speeds below this value.

(4) The flap extended speeds V_{FE} and the pertinent wing-flap positions and engine powers.

(5) The landing gear operating speed or speeds, and a statement explaining the speeds as defined in CS 25.1515(a).

(6) The landing gear extended speed V_{LE}, if greater than V_{LO}, and a statement that this is the maximum speed at which the aeroplane can be safely flown with the landing gear extended.

(b) *Powerplant limitations*. The following information must be furnished:

(1) Limitations required by CS 25.1521.

(2) Explanation of the limitations, when appropriate.

(3) Information necessary for marking the instruments required by CS 25.1549 to 25.1553.

(c) *Weight and loading distribution.* The weight and centre of gravity limitations established under CS 25.1519 must be furnished in the aeroplane Flight Manual. All of the following information, including the weight distribution limitations established under CS 25.1519, must be presented either in the aeroplane Flight Manual or in a separate weight and balance control and loading document that is incorporated by reference in the aeroplane Flight Manual;

(1) The condition of the aeroplane and the items included in the empty weight as defined in accordance with CS 25.29.

(2) Loading instructions necessary to ensure loading of the aeroplane within the weight and centre of gravity limits, and to maintain the loading within these limits in flight.

(3) If certification for more than one centre of gravity range is requested, the appropriate limitations, with regard to weight and loading procedures, for each separate centre of gravity range.

(d) *Flight crew.* The number and functions of the minimum flight crew determined under CS 25.1523 must be furnished.

(e) *Kinds of operation.* The kinds of operation approved under CS 25.1525 must be furnished.

(f) *Ambient air temperatures and operating altitudes.* The extremes of the ambient air temperatures and operating altitudes established under CS 25.1527 must be furnished.

(g) Reserved.

(h) *Additional operating limitations.* The operating limitations established under CS 25.1533 must be furnished.

(i) *Manoeuvring flight load factors.* The positive manoeuvring limit load factors for which the structure is proven, described in terms of accelerations, must be furnished.

(j) reserved

(k) A limitation on the maximum depth of runway contaminants for take-off operation must be furnished. (See AMC 25.1583(k).)

[Amdt 25/1]

AMC 25.1583(i) Manoeuvring Flight Load Factors

ED Decision 2003/2/RM

The flight manoeuvring limit load factors for which the structure is approved, expressed in terms of normal acceleration, or g, should be included. If more restrictive flight load factors are established for particular operations outside the normal operating envelope (e.g. landing flap position with maximum take-off weight) such factors should be presented and defined.

AMC 25.1583(k) Maximum Depth of Runway Contaminants for Take-off Operations

ED Decision 2006/005/R

Compliance with CS 25.1583(k) may be shown using either Method 1 or Method 2 –

a. *Method 1*. If information on the effect of runway contaminants on the expected take-off performance of the aeroplane is furnished in accordance with the provisions of CS 25.1591, take-off operation should be limited to the contamination depths for which take-off information is provided.

b. *Method 2*. If information on the effect of runway contaminants on the expected take-off performance of the aeroplane in accordance with the provisions of CS 25.1591 is not provided, take-off operation should be limited to runways where the degree of contamination does not exceed the equivalent of 3 mm (0·125 inch) of water, except in isolated areas not exceeding a total of 25% of the area within the required length and width being used.

NOTE 1 In establishing the maximum depth of runway contaminants it may be necessary to take account of the maximum depth for which the engine air intakes have been shown to be free of ingesting hazardous quantities of water or other contaminants in accordance with CS 25.1091(d)(2).
NOTE 2: Unless performance effects are based on tests in water depths exceeding 15 mm, or on other evidence equivalent in accuracy to the results of direct testing, it will not normally be acceptable to approve take-off operation in depths of contaminants exceeding the equivalent of 15 mm of water.

[Amdt 25/2]

CS 25.1585 Operating procedures

ED Decision 2003/2/RM

(a) Operating procedures must be furnished for –

(1) Normal procedures peculiar to the particular type or model encountered in connection with routine operations;

(2) Non-normal procedures for malfunction cases and failure conditions involving the use of special systems or the alternative use of regular systems; and

(3) Emergency procedures for foreseeable but unusual situations in which immediate and precise action by the crew may be expected to substantially reduce the risk of catastrophe.

(b) Information or procedures not directly related to airworthiness or not under the control of the crew, must not be included, nor must any procedure that is accepted as basic airmanship.

(c) Information identifying each operating condition in which the fuel system independence prescribed in CS 25.953 is necessary for safety must be furnished, together with instructions for placing the fuel system in a configuration used to show compliance with that section.

(d) The buffet onset envelopes determined under CS 25.251 must be furnished. The buffet onset envelopes presented may reflect the centre of gravity at which the aeroplane is normally loaded during cruise if corrections for the effect of different centre of gravity locations are furnished.

(e) Information must be furnished that indicates that when the fuel quantity indicator reads ‘zero’ in level flight, any fuel remaining in the fuel tank cannot be used safely in flight.

(f) Information on the total quantity of usable fuel for each fuel tank must be furnished.

CS 25.1587 Performance information

ED Decision 2003/2/RM

(a) Each aeroplane Flight Manual must contain information to permit conversion of the indicated temperature to free air temperature if other than a free air temperature indicator is used to comply with the requirements of CS 25.1303(a)(1).

(b) Each aeroplane Flight Manual must contain the performance information computed under the applicable provisions of this CS-25 (including CS 25.115, 25.123 and 25.125 for the weights, altitudes, temperatures, wind components, and runway gradients, as applicable) within the operational limits of the aeroplane, and must contain the following:

(1) In each case, the conditions of power, configuration, and speeds, and the procedures for handling the aeroplane and any system having a significant effect on the performance information.

(2) V_{SR} determined in accordance with CS 25.103.

(3) The following performance information (determined by extrapolation and computed for the range of weights between the maximum landing weight and the maximum takeoff weight):

(i) Climb in the landing configuration.

(ii) Climb in the approach configuration.

(iii) Landing distance.

(4) Procedures established under CS 25.101(f) and (g) that are related to the limitations and information required by CS 25.1533 and by this paragraph in the form of guidance material including any relevant limitation or information.

(5) An explanation of significant or unusual flight or ground handling characteristics of the aeroplane.

(6) Corrections to indicated values of airspeed, altitude and outside air temperature.

(7) An explanation of operational landing runway length factors included in the presentation of the landing distance, if appropriate.

SUPPLEMENTARY INFORMATION

CS 25.1591 Performance Information for Operations with Contaminated Runway Surface Conditions

ED Decision 2006/005/R

(a) Supplementary performance information applicable to aeroplanes operated on runways contaminated with standing water, slush, snow or ice may be furnished at the discretion of the applicant. If supplied, this information must include the expected performance of the aeroplane during take-off and landing on hard-surfaced runways covered by these contaminants. If information on any one or more of the above contaminated surfaces is not supplied, the AFM must contain a statement prohibiting operation(s) on the contaminated surface(s) for which information is not supplied. Additional information covering operation on contaminated surfaces other than the above may be provided at the discretion of the applicant.

(b) Performance information furnished by the applicant must be contained in the AFM. The information may be used to assist operators in producing operational data and instructions for use by their flight crews when operating with contaminated runway surface conditions. The information may be established by calculation or by testing.

(c) The AFM must clearly indicate the conditions and the extent of applicability for each contaminant used in establishing the contaminated runway performance information. It must also state that actual conditions that are different from those used for establishing the contaminated runway performance information may lead to different performance.

[Amdt 25/2]

AMC 25.1591 The derivation and methodology of performance information for use when taking-off and landing with contaminated runway surface conditions

ED Decision 2006/005/R

1.0 Purpose

This AMC provides information, guidelines, recommendations and acceptable means of compliance for use by applicants in the production of performance information for aeroplanes when operated on runways that are contaminated by standing water, slush, snow, ice or other contaminants.

2.0 Technical Limitations of Data

The methodology specified in this AMC provides one acceptable means of compliance with the provisions of CS 25.1591. In general it does not require aeroplane testing on contaminated runway surfaces, although such testing if carried out at the discretion of the applicant may significantly improve the quality of the result or reduce the quantity of analytical work required.

Due to the nature of naturally occurring runway contaminants and difficulties associated with measuring aeroplane performance on such surfaces, any data that is either calculated or measured is subject to limitations with regard to validity. Consequently the extent of applicability should be clearly stated.

The properties specified in this AMC for various contaminants are derived from a review of the available test and research data and are considered to be acceptable for use by applicants. This is not an implied prohibition of data for other conditions or that other conditions do not exist.

It has been recently determined that the assumption to use wet runway surface field length performance data for operations on runway surfaces contaminated with dry snow (depths below 10 mm) and wet snow (depths below 5 mm) may be inappropriate. Flight test evidence together with estimations have indicated some measure of relatively low gear displacement drag and a measurable reduction in surface friction in comparison to the assumptions associated with wet runway field performance data. As a consequence it has been agreed that additional work is required to further develop the associated methodology. As an interim measure it has been concluded that it is reasonable to consider these surfaces by recommending that they be addressed by using the data for the lowest depth of the contaminant provided.

It is intended that the use of aeroplane performance data for contaminated runway conditions produced in accordance with CS 25.1591 should include recommendations associated with the operational use of the data. Where possible, this operational guidance should be provided by the applicant or its production co-ordinated with the applicant to ensure that its use remains valid.

Operators are expected to make careful and conservative judgments in selecting the appropriate performance data to use for operations on contaminated runways. Particular attention should be paid to the presence of any contaminant in the critical high speed portion of the runway. For takeoff, it may be appropriate to use different contaminant types or depths for the takeoff and the accelerate-stop portions. For example, it may be appropriate to use a greater contaminant depth or a contaminant type that has a more detrimental effect on acceleration for the takeoff portion than for the accelerate-stop portion of the takeoff analysis.

In considering the maximum depth of runway contaminants it may be necessary to take account of the maximum depth for which the engine air intakes have been shown to be free of ingesting hazardous quantities of water in accordance with CS 25.1091(d)(2).

3.0 Standard Assumptions

Due to the wide variation in possible conditions when operating on contaminated runways and the limitations inherent in representing the effects of these conditions analytically, it is not possible to produce performance data that will precisely correlate with each specific operation on a contaminated surface. Instead, the performance data should be determined for a standardised set of conditions that will generally and conservatively represent the variety of contaminated runway conditions occurring in service.

It should be assumed that:

1. the contaminant is spread over the entire runway surface to an even depth (although rutting, for example, may have taken place).
2. the contaminant is of a uniform specific gravity.
3. where the contaminant has been sanded, graded (mechanically levelled) or otherwise treated before use, that it has been done in accordance with agreed national procedures.

4.0 Definitions

These definitions may be different to those used by other sources but are considered appropriate for producing acceptable performance data, suitable for use in aeroplane operations.

4.1 Standing Water

Water of a depth greater than 3mm. A surface condition where there is a layer of water of 3mm or less is considered wet for which AMC 25.1591 is not applicable.

4.2 Slush

Partly melted snow or ice with a high water content, from which water can readily flow, with an assumed specific gravity of 0.85. Slush is normally a transient condition found only at temperatures close to 0°C.

4.3 Wet Snow

Snow that will stick together when compressed, but will not readily allow water to flow from it when squeezed, with an assumed specific gravity of 0.5.

4.4 Dry Snow

Fresh snow that can be blown, or, if compacted by hand, will fall apart upon release (also commonly referred to as loose snow), with an assumed specific gravity of 0.2. The assumption with respect to specific gravity is not applicable to snow which has been subjected to the natural ageing process.

4.5 Compacted Snow

Snow which has been compressed into a solid mass such that the aeroplane wheels, at representative operating pressures and loadings, will run on the surface without causing significant rutting.

4.6 Ice

Water which has frozen on the runway surface, including the condition where compacted snow transitions to a polished ice surface.

4.7 Specially Prepared Winter Runway

A runway, with a dry frozen surface of compacted snow and/or ice which has been treated with sand or grit or has been mechanically or chemically treated to improve runway friction. The runway friction is measured and reported on a regular basis in accordance with national procedures.

4.8 Specific Gravity

The density of the contaminant divided by the density of water.

5.0 Contaminant Properties to be Considered

5.1 Range of Contaminants

The following general range of conditions or properties may by used. The list given in Table 1 is not necessarily comprehensive and other contaminants may be considered, provided account is taken of their specific properties.

Data should assume the contaminant to be uniform in properties and uniformly spread over the complete runway.

Contaminants can be classified as being:-

(i) Drag producing, for example by contaminant displacement or impingement,

(ii) Braking friction reducing, or

(iii) A combination of (i) and (ii).

Data to be produced should use the classification and assumptions of Table 1 and then the appropriate sections of the AMC as indicated.

Contaminant Type	Range of Depths to be Considered - mm	Specific Gravity Assumed for Calculation	Is Drag Increased?	Is Braking Friction Reduced Below Dry Runway Value?	Analysis Paragraphs Relevant
Standing water, Flooded runway	3-15 (see Note 1)	1.0	Yes	Yes	7.1, 7.3, 7.4
Slush	3-15 (see Note 1)	0.85	Yes	Yes	7.1, 7.3, 7.4
Wet Snow (see Note 2)	Below 5		No	Yes	7.3, 7.4
Wet Snow (see Note 3)	5-30	0.5	Yes	Yes	7.1, 7.3, 7.4
Dry Snow (see Note 2)	Below 10		No	Yes	7.3, 7.4
Dry Snow	10-130	0.2	Yes	Yes	7.2, 7.3, 7.4
Compacted Snow	0 (see Note 4)		No	Yes	7.3, 7.4
Ice	0 (see Note 4)		No	Yes	7.3, 7.4
Specially Prepared Winter Runway	0 (see Note 4)		No	Yes	7.3, 7.4

Table 1

Note 1: Runways with water depths or slush less than 3mm are considered wet, for which AMC 25.1591 is not applicable.

Note 2: Contaminant drag may be ignored.

Note 3: For conservatism the same landing gear displacement and impingement drag methodology is used for wet snow as for slush.

Note 4: Where depths are given as zero it is assumed that the aeroplane is rolling on the surface of the contaminant.

5.2 Other Contaminants

Table 1 lists the contaminants commonly found. It can be seen that the complete range of conditions or specific gravities has not been covered. Applicants may wish to consider other, less likely, contaminants in which case such contaminants should be defined in a manner suitable for using the resulting performance data in aeroplane operations.

6.0 Derivation of Performance Information

6.1 General Conditions

Take-off and landing performance information for contaminated runways should be determined in accordance with the assumptions given in paragraph 7.0.

Where performance information for different contaminants are similar, the most critical may be used to represent all conditions.

This AMC does not set out to provide a complete technical analytical process but rather to indicate the elements that should be addressed. Where doubt exists with regard to the

accuracy of the methodology or the penalties derived, consideration should be given to validation by the use of actual aeroplane tests or other direct experimental measurements.

6.2 Take-off on a Contaminated Runway

6.2.1 Except as modified by the effects of contaminant as derived below, performance assumptions remain unchanged from those used for a wet runway, in accordance with the agreed certification standard. These include accelerate-stop distance definition, time delays, take-off distance definition, engine failure accountability and stopping means other than by wheel brakes (but see paragraph 7.4.3).

6.2.2 Where airworthiness or operational standards permit operations on contaminated runways without engine failure accountability, or using a V_{STOP} and a V_{GO} instead of a single V_1, these performance assumptions may be retained. In this case, a simple method to derive a single V_1 and associated data consistent with the performance assumptions of paragraph 6.2.1 must also be provided in the AFM.

NOTE: V_{STOP} is the highest decision speed from which the aeroplane can stop within the accelerate-stop distance available. V_{GO} is the lowest decision speed from which a continued take-off is possible within the take-off distance available.

6.3 Landing on a Contaminated Runway

6.3.1 Airborne distance

Assumptions regarding the airborne distance for landing on a contaminated runway are addressed in paragraph 7.4.2.

6.3.2 Ground Distance

Except as modified by the effects of contaminant as derived below, performance assumptions for ground distance determination remain unchanged from those used for a dry runway. These assumptions include:

– Touchdown time delays.

– Stopping means other than wheel brakes (but see paragraph 7.4.3).

7.0 Effects of Contaminant

7.1 Contaminant Drag - Standing Water, Slush, Wet Snow

General advice and acceptable calculation methods are given for estimating the drag force due to fluid contaminants on runways:

Total drag due to fluid contaminant	=	Drag due to fluid displacement by tyres	+	Drag due to airframe impingement of fluid spray from tyres

The essence of these simple calculation methods is the provision of appropriate values of drag coefficients below, at, and above tyre aquaplaning speed, V_P (see paragraph 7.1.1):

– Paragraphs 7.1.2.a and 7.1.2.b give tyre displacement drag coefficient values for speeds below V_P.

– Paragraph 7.1.3.b.2 gives tyre equivalent displacement drag coefficient values to represent the skin friction component of impingement drag for speeds below V_P.

– Paragraph 7.1.4 gives the variation with speed, at and above V_P, of drag coefficients representing both fluid displacement and impingement.

7.1.1 Aquaplaning Speed

An aeroplane will aquaplane at high speed on a surface contaminated by standing water, slush or wet snow. For the purposes of estimating the effect of aquaplaning on contaminant drag, the aquaplaning speed, V_P, is given by -

$V_P = 9\sqrt{P}$

where V_P is the ground speed in knots and P is the tyre pressure in lb/in^2.

Predictions (Reference 5) indicate that the effect of running a wheel over a low density liquid contaminant containing air, such as slush, is to compress it such that it essentially acts as high density contaminant. This means that there is essentially no increase in aquaplaning speed to be expected with such a lower density contaminant. For this reason, the aquaplaning speed given here is not a function of the density of the contaminant.

(See References 1, 5 and 10)

7.1.2 Displacement Drag

This is drag due to the wheel(s) running through the contaminant and doing work by displacing the contaminant sideways and forwards.

a. Single wheel.

The drag on the tyre is given by -

$D = C_D \frac{1}{2} \rho V^2 S$

Where ρ is the density of the contamination, S is the frontal area of the tyre in the contaminant and V is the groundspeed, in consistent units.

S = b x d where d is the depth of contamination and b is the effective tyre width at the contaminant surface and may be found from –

$$b = 2W\left[\left(\frac{\delta + d}{W}\right) - \left(\frac{\delta + d}{W}\right)^2\right]^{1/2}$$

Where W is the maximum width of the tyre and δ is the tyre deflection, which may be obtained from tyre manufacturers' load-deflection curves.

The value of C_D may be taken as 0.75 for an isolated tyre below the aquaplaning speed, V_P.

(See Reference 3)

b. Multiple wheels

A typical dual wheel undercarriage shows a drag 2.0 times the single wheel drag, including interference. For a typical four-wheel bogie layout the drag is 4 times the single wheel drag (again including interference). For a six-wheel bogie layout a reasonable conservative estimate suggests a figure of 4.2 times the single wheel drag. The drag of spray striking the landing gear structure above wheel height may also be important and should be included in the analysis for paragraph 7.1.3.b.1 but for multiple wheel bogies the

factors above include centre spray impingement drag on gear structure below wheel height.

(See Reference 3)

7.1.3 Spray Impingement Drag

a. Determination of spray geometry

The sprays produced by aeroplane tyres running in a liquid contaminant such as slush or water are complex and depend on aeroplane speed, the shape and dimensions of the loaded tyre and the contaminant depth. The spray envelope should be defined, that is the height, width, shape and location of the sideways spray plumes and, in the case of a dual wheel undercarriage, the centre spray plumes. Additionally, a forward bow-wave spray will be present which may be significant in drag terms should it impinge on the aeroplane.

In order to assess the drag it is necessary to know the angles of the spray plumes so that they can be compared with the geometry of the aeroplane. The angle at which the plumes rise is generally between 10° and 20° but it varies considerably with speed and depth of precipitation and to a small extent with tyre geometry. A method for estimating the plume angles in the horizontal and vertical directions is given in References 1 and 7 and may be used in the absence of experimental evidence. This information may be used to indicate those parts of the airframe which will be struck by spray, in particular whether the nose-wheel plume will strike the main landing gear or open wheel-wells, the wing leading edges or the engine nacelles, and whether the main-wheel plumes will strike the rear fuselage or flaps.

b. Determination of the retarding forces

Following definition of the spray envelopes, the areas of contact between the spray and the airframe can be defined and hence the spray impingement drag determined. This will be in two parts, direct interaction of the spray with the aeroplane structure and skin friction.

For smaller jet aeroplanes, typically those where the wing-to-ground height is less than 2 metres (6 feet), the methods contained in this document may not be conservative. Drag estimates should be correlated with performance measurements taken, for example, during water trough tests for engine ingestion.

b.1. Drag caused by direct impact of the spray

For aeroplane designs where surface areas are exposed to direct spray impact, the resulting drag forces should be taken into account. These forces exist where a significant part of the spray flow is directed at part of the aeroplane structure at a normal or non-oblique angle. The drag, or momentum loss of the mass of fluid, so caused should be accounted for.

(See Reference 6)

b.2. Drag caused by skin friction

Reference 2 explains that the relative velocity between spray from the landing gear and wetted aeroplane components causes drag due to skin friction and provides a method for its calculation. Where more than one spray acts on the same wing or fuselage surface the skin friction forces are not cumulative and the single, higher calculated value should be used.

An alternative, simple, conservative empirical estimate of skin friction drag, which converts the skin friction drag into an equivalent displacement drag coefficient based on nose-wheel alone drag measurements, is given by

C_D spray = 8 x L x 0.0025

where C_D spray is to be applied to the total nose-wheel displacement area (b x d x number of wheels) and L is the wetted fuselage length in feet behind the point at which the top of the spray plume reaches the height of the bottom of the fuselage. This relation can also be used in the case of a main-wheel spray striking the rear fuselage. In the case of any one main wheel unit only the inner plume from the innermost leading wheel is involved so the relevant displacement area is half that of one main wheel.

7.1.4 Effect of Speed on Displacement and Impingement Drag Coefficients at and above Aquaplaning Speed

The drag above V_P reduces to zero at lift off and one acceptable method is to reduce C_D as shown in the curve in Figure 1. This relationship applies to both displacement and spray impingement drag coefficients.

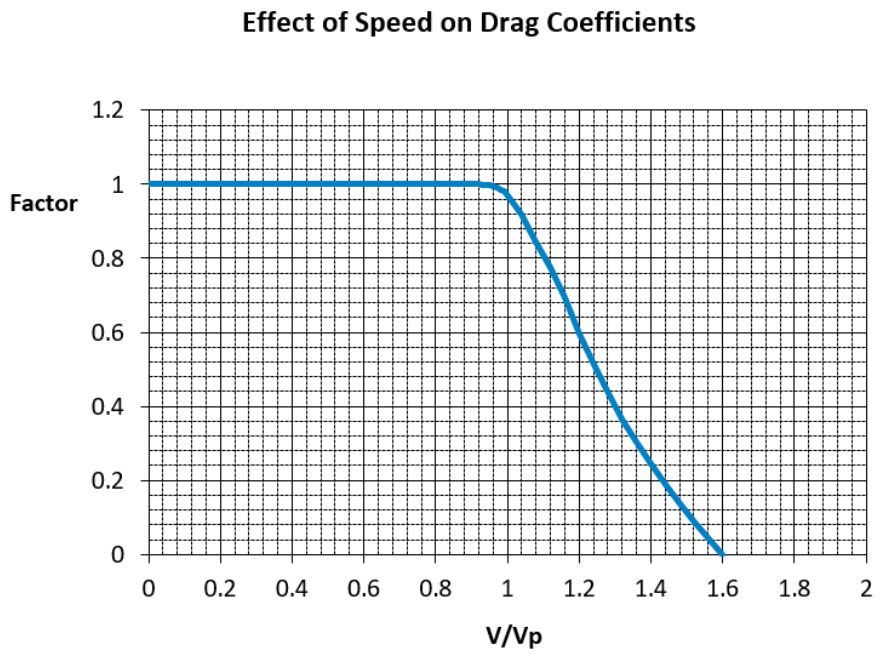

Figure 1

7.2 Contaminant Drag - Dry Snow

A basic method for calculating the drag of aeroplane tyres rolling in dry snow is given herein. The method is based on the theoretical model presented in References 8 and 9, using a specific gravity of 0.2 as provided in Table 1. Only snow of specific gravity of 0.2 is selected because it represents naturally occurring snow and results in the highest drag variation with ground speed for the range of snow specific gravities that are likely to be encountered. For other snow specific gravities, the more detailed methods of Reference 8 should be used.

7.2.1 Single Tyre Drag

The total displacement drag of a tyre rolling in dry snow is presented by the following equation:

$D = D_C + D_D$

The term D_C represents the drag due to the compression of the snow by the tyre. The term D_D represents the drag due to the displacement of the snow particles in a vertical direction.

The drag due to snow compression for a single tyre for snow with a specific gravity of 0.2 is given by:

Tyre pressure > 100 psi

$D_C = 74000\ bd$ (Newtons)

Tyre pressure $50 \leq p \leq 100$ psi

$D_C = 56000\ bd$ (Newtons)

In which:

d = snow depth in metres

b = is the tyre width at the surface in metres (see paragraph 7.1.2)

The drag due to the displacement of the snow particles in a vertical direction for a single tyre for snow with a specific gravity of 0.2 is given by:

Tyre pressure > 100 psi

$$D_D = \left(\frac{56}{R} + \frac{9}{d}\right) bd^2 V_g^2 \quad \text{(Newtons)}$$

Tyre pressure $50 \leq p \leq 100$ psi

$$D_D = \left(\frac{56}{R} + \frac{8}{d}\right) bd^2 V_g^2 \quad \text{(Newtons)}$$

In which:

d = snow depth in metres

b = is the tyre width at the surface in metres (see paragraph 7.1.2)

V_g = the ground speed in m/s

R = tyre radius in metres

For other snow densities D_C and D_D can be calculated using the method presented in Reference 8.

7.2.2 Multiple Wheels

The drag on dual tyre landing gears (found on both nose and main gears) is simply the drag of both single tyres added together. The interference effects between both tyres, found on dual tyre configurations running through slush or water, are not likely to be present when rolling over a snow covered surface. The drag originates from the vertical compaction of the snow layer. Although there is some deformation perpendicular to the tyre direction of motion, this deformation occurs mainly at or below the bottom of the rut and therefore does not affect the deformation in front of the adjacent tyre. Hence, interference effects can be ignored.

In the case of a bogie landing gear only the leading tyres have to be considered for the drag calculation, as explained in Reference 8. After the initial compression of the snow by the leading tyres, the snow in the rut becomes stronger and a higher pressure must be applied to compress the snow further. Therefore, the drag on the trailing tyres can be neglected and the drag on a bogie landing gear is assumed to be equal to that of a dual tyre configuration. All other multiple-tyre configurations can be treated in the same manner.

7.2.3 Spray Impingement Drag

Experiments have shown that the snow spray coming from the tyres is limited with only small amounts striking the airframe. The speed and the density of the snow spray are much lower than, for instance, that of water spray. Therefore, the drag due to snow impingement on the airframe can be neglected.

7.2.4 Total Landing Gear Drag

To obtain the total drag on the tyres due to snow, D_C and D_D for each single tyre (excluding the trailing tyres of a bogie gear) should be calculated and summed.

7.3 Braking Friction (All Contaminants)

On most contaminant surfaces the braking action of the aeroplane will be impaired. Performance data showing these effects can be based on either the minimum conservative 'default' values, given in Table 2 or test evidence and assumed values (see paragraph 7.3.2). In addition the applicant may optionally provide performance data as a function of aeroplane braking coefficient or wheel braking coefficient.

7.3.1 Default Values

To enable aeroplane performance to be calculated conservatively in the absence of any direct test evidence, default friction values as defined in Table 2 may be used. These friction values represent the effective braking coefficient of an anti-skid controlled braked wheel/tyre.

Contaminant	Default Friction Value
Standing Water and Slush	$= -0.0632\left(\frac{V}{100}\right)^3 + 0.2683\left(\frac{V}{100}\right)^2 - 0.4321\left(\frac{V}{100}\right) + 0.3485$ where V is groundspeed in knots Note: For V greater than the aquaplaning speed, use = 0.05 constant
Wet Snow below 5mm depth	0.17

Wet Snow	0.17
Dry Snow below 10mm depth	0.17
Dry Snow	0.17
Compacted Snow	0.20
Ice	0.05

Note: Braking Force = load on braked wheel x Default Friction Value

Table 2

Note: For a specially prepared winter runway surface no default friction value can be given due to the diversity of conditions that will apply.

(See reference 10)

7.3.2 Other Than Default Values

In developing aeroplane braking performance using either test evidence or assumed friction values other than the default values provided in Table 2, a number of other brake related aspects should be considered. Brake efficiency should be assumed to be appropriate to the brake and anti-skid system behaviour on the contaminant under consideration or a conservative assumption can be used. It can be assumed that wheel brake torque capability and brake energy characteristics are unaffected. Where the tyre wear state significantly affects the braking performance on the contaminated surface, it should be assumed that there is 20% of the permitted wear range remaining.

Where limited test evidence is available for a model predecessor or derivative this may be used given appropriate conservative assumptions.

7.3.3 Use of Ground Friction Measurement Devices

Ideally it would be preferable to relate aeroplane braking performance to a friction index measured by a ground friction device that would be reported as part of a Surface Condition Report. However, there is not, at present, a common friction index for all ground friction measuring devices. Hence it is not practicable at the present time to determine aeroplane performance on the basis of an internationally accepted friction index measured by ground friction devices. Notwithstanding this lack of a common index, the applicant may optionally choose to present take-off and landing performance data as a function of an aeroplane braking coefficient or wheel braking coefficient constant with ground speed for runways contaminated with wet snow, dry snow, compacted snow or ice. The responsibility for relating this data to a friction index measured by a ground friction device will fall on the operator and the operating authority.

7.4 Additional Considerations

7.4.1 Minimum V_1

For the purpose of take-off distance determination, it has been accepted that the minimum V_1 speed may be established using the V_{MCG} value established in accordance with CS 25.149(g). As implied in paragraph 8.1.3, this may not ensure that the lateral deviation after engine failure will not exceed 30 ft on a contaminated runway.

7.4.2 Landing Air Distance

For contaminated surfaces, the airborne distance should be calculated by assuming that 7 seconds elapse between passing through the 50 ft screen height and touching down on the runway. In the absence of flight test data to substantiate a lower value, the touchdown speed should be assumed to be 93% of the threshold speed.

7.4.3 Reverse Thrust

Performance information may include credit for reverse thrust where available and controllable.

8.0 Presentation of Supplementary Performance Information

8.1 General

Performance information for contaminated runways, derived in accordance with the provisions of paragraphs 5.0 to 7.0, should be accompanied by appropriate statements such as:

8.1.1 Operation on runways contaminated with water, slush, snow, ice or other contaminants implies uncertainties with regard to runway friction and contaminant drag and therefore to the achievable performance and control of the aeroplane during take-off, since the actual conditions may not completely match the assumptions on which the performance information is based. Where possible, every effort should be made to ensure that the runway surface is cleared of any significant contamination.

8.1.2 The performance information assumes any runway contaminant to be of uniform depth and density.

8.1.3 The provision of performance information for contaminated runways should not be taken as implying that ground handling characteristics on these surfaces will be as good as can be achieved on dry or wet runways, in particular following engine failure, in crosswinds or when using reverse thrust.

8.1.4 The contaminated runway performance information does not in any way replace or amend the Operating Limitations and Performance Information listed in the AFM, unless otherwise stated.

8.2 Procedures

In addition to performance information appropriate to operating on a contaminated runway, the AFM should also include recommended procedures associated with this performance information. Differences in other procedures for operation of the aeroplane on a contaminated surface should also be presented, e.g., reference to crosswinds or the use of high engine powers or derates.

8.3 Take-off and Landing Data

This should be presented either as separate data appropriate to a defined runway contaminant or as incremental data based on the AFM normal dry or wet runway information. Information relating to the use of speeds higher than V_{REF} on landing, that is speeds up to the maximum recommended approach speed additive to V_{REF}, and the associated distances should also be included.

The landing distance must be presented either directly or with the factors required by the operating manuals, with clear explanation where appropriate.

Where data is provided for a range of contaminant depths, for example 3, 6, 9, 12, 15mm, then the AFM should clearly indicate how to define data for contaminant depths within the range of contaminant depths provided.

Where the AFM presents data using V_{STOP} and V_{GO}, it must be stated in the AFM that use of this concept is acceptable only where operation under this standard is permitted.

9 References

Reference sources containing worked methods for the processes outlined in 7.1 to 7.3.3 are identified below:

1. ESDU Data Item 83042, December 1983, with Amendment A, May 1998. “Estimation of Spray Patterns Generated from the Side of Aircraft Tyres Running in Water or Slush”.
2. ESDU Data Item 98001, May 1998. “Estimation of Airframe Skin-Friction Drag due to Impingement of Tyre Spray”.
3. ESDU Data Item 90035, November 1990, with Amendment A, October 1992. “Frictional and Retarding Forces on Aircraft Tyres. Part V: Estimation of Fluid Drag Forces”.
4. ESDU Memorandum No.97, July 1998. “The Order of Magnitude of Drag due to Forward Spray from Aircraft Tyres”.
5. ESDU Memorandum No. 96, February 1998. “Operations on Surfaces Covered with Slush”.
6. ESDU Memorandum No. 95, March 1997, “Impact Forces Resulting From Wheel Generated Spray: Re-Assessment Of Existing Data”.
7. NASA Report TP-2718 “Measurement of Flow Rate and Trajectory of Aircraft Tire-Generated Water Spray”.
8. Van Es, G.W.H., “Method for Predicting the Rolling Resistance of Aircraft Tires in Dry Snow”. AIAA Journal of Aircraft, Volume 36, No.5, September-October 1999.
9. Van Es, G.W.H., “Rolling Resistance of Aircraft Tires in Dry Snow”, National Aerospace Laboratory NLR, Technical Report TR-98165, Amsterdam, 1998.
10. ESDU Data Item 72008, May 1972. 'Frictional and retarding forces on aircraft tyres. Part III: planning.

[Amdt 25/2]

SUBPART J – AUXILIARY POWER UNIT INSTALLATIONS

GENERAL

CS 25J901 Installation

ED Decision 2005/006/R

(a) For the purpose of this subpart, the APU installation includes:

(1) The APU;

(2) Each component that affects the control of the APU;

(3) Each component that affects the safety of the APU.

(b) For the purpose of this subpart,

(1) An essential APU is defined as an APU whose function is required for the dispatch of the aeroplane and/or continued safe flight.

(2) A non-essential APU is defined as an APU whose function is a matter of convenience, either on the ground or in flight, and may be shut down without jeopardising safe aeroplane operation.

(c) For each APU:

(1) The installation must comply with:

(i) The installation instructions provided under CS-APU, and

(ii) The applicable provisions of this subpart for non-essential APUs, or

(iii) The applicable provisions of this subpart for essential APUs.

(2) The components of the installation must be constructed, arranged, and installed so as to ensure their continued safe operation between normal inspections or overhauls. (See AMC 25J901(c)(2).)

(3) The installation must be accessible for necessary inspections and maintenance; and

(4) The major components of the installation must be electrically bonded to the other parts of the aeroplane. (See AMC 25J901(c)(4).)

(d) The APU installation must comply with CS 25.1309, except that the effects of the following need not comply with CS 25.1309(b) (see AMC 25.901(c)):

(1) APU case burn through or rupture; and

(2) Uncontained APU rotor failure.

[Amdt 25/1]

AMC 25J901(c)(2) Assembly of Components

ED Decision 2005/006/R

The objectives of CS 25.671(b) should be satisfied with respect to APU systems, where the safety of the aeroplane could otherwise be jeopardised.

[Amdt 25/1]

AMC 25J901(c)(4) Electrical Bonding

ED Decision 2005/006/R

Where the APU is not in direct electrical contact with its mounting the engine should be electrically connected to the main earth system by at least two removable primary conductors, one on each side of the APU.

[Amdt 25/1]

CS 25J903 Auxiliary power unit

ED Decision 2005/006/R

(a) Each APU must meet the appropriate requirements of CS-APU for its intended function:

(1) Essential: Category 1 APU,

(2) Non-essential: Category 1 or Category 2 APU.

(b) Reserved

(c) Control of APU rotation and shut-down capability.

(1) It shall be possible to shut down the APU from the flight deck in normal and emergency conditions.

(2) Where continued rotation of an APU could jeopardise the safety of the aeroplane, there must be a means for stopping rotation. Each component of the stopping system located in the APU compartment must be at least fire resistant.

(d) For APU installation:

(1) Design precautions must be taken to minimise the hazards to the aeroplane in the event of an APU rotor failure or of a fire originating within the APU which burns through the APU casing. (See AMC 20-128A.)

(2) The systems associated with APU control devices, systems and instrumentation, must be designed to give reasonable assurance that those APU operating limitations that adversely affect turbine rotor structural integrity will not be exceeded in service.

(e) In-flight start capability.

(1) For non-essential APUs that can be started in-flight and all essential APUs:

(i) Means must be provided to start the APU in-flight, and

(ii) An altitude and airspeed envelope must be established and demonstrated for APU in-flight starting.

(2) For essential APUs:

Cold soak must be considered in establishing the envelope of CS 25J903(e)(1)(ii).

[Amdt 25/1]

CS 25J939 APU operating characteristics

ED Decision 2005/006/R

(a) APU operating characteristics must be investigated in all aeroplane operating conditions from APU start until shutdown to determine that no adverse characteristics (such as stall, surge, or

flame-out) are present, to a hazardous degree, during normal and emergency operation within the range of operation limitations of the aeroplane and of the APU.

(b) Reserved

(c) The APU air inlet system may not, as a result of air-flow distortion during normal operation, cause vibration harmful to the APU.

(d) It must be established over the range of operating conditions for which certification is required, that the APU installation vibratory conditions do not exceed the critical frequencies and amplitudes established under CS-APU 120.

[Amdt 25/1]

CS 25J943 Negative acceleration

ED Decision 2005/006/R

No hazardous malfunction of an APU or any component or system associated with the APU may occur when the aeroplane is operated at the negative accelerations within the flight envelopes prescribed in CS 25.333. This must be shown for the greatest duration expected for the acceleration.

[Amdt 25/1]

AMC 25J943 APU Operating Characteristics

ED Decision 2005/006/R

1 Compliance with CS 25J943 should be shown by design analysis and flight tests. The flight tests should include manoeuvre in which less than zero 'g' occurs for one continuous period of at least 5 seconds and a further manoeuvre with two periods of less than zero 'g' with a total time for these two periods of at least 5 seconds.

2 In the case of non-essential APUs, inadvertent shut-down due to negative accelerations is acceptable.

[Amdt 25/1]

FUEL SYSTEM

CS 25J951 General

ED Decision 2005/006/R

(a) Each fuel system must be constructed and arranged to ensure a flow of fuel at a rate and pressure established for proper APU functioning under each likely operating condition, including any manoeuvre for which certification is requested and during which the APU is permitted to be in operation.

(b) For essential APUs:

Each fuel system must be arranged so that any air which is introduced into the system will not result in flameout.

(c) For essential APUs:

Each fuel system for an essential APU must be capable of sustained operation throughout its flow and pressure range with fuel initially saturated with water at 26.7 °C and having 0.10 cm^3 of free water per liter added and cooled to the most critical condition for icing likely to be encountered in operation.

[Amdt 25/1]

CS 25J952 Fuel system analysis and test

ED Decision 2005/006/R

(a) Proper fuel system functioning under all probable operating conditions must be shown by analysis and those tests found necessary by the Agency. Tests, if required, must be made using the aeroplane fuel system or a test article that reproduces the operating characteristics of the portion of the fuel system to be tested.

(b) The likely failure of any heat exchanger using fuel as one of its fluids may not result in a hazardous condition.

[Amdt 25/1]

CS 25J953 Fuel system independence

ED Decision 2005/006/R

Each fuel system must allow the supply of fuel to the APU:

(a) Through a system independent of each part of the system supplying fuel to the main engines; or

(b) From the fuel supply to the main engine if provision is made for a shut-off means to isolate the APU fuel line.

[Amdt 25/1]

CS 25J955 Fuel Flow

ED Decision 2005/006/R

(a) Each fuel system must provide at least 100 percent of the fuel flow required by the APU under each intended operating condition and manoeuvre. Compliance must be shown as follows:

(1) Fuel must be delivered at a pressure within the limits specified for the APU.

(2) For essential APUs:

(i) The quantity of fuel in the tank may not exceed the amount established as the unusable fuel supply for that tank under the requirements of CS 25.959 plus that necessary to show compliance with this paragraph.

(ii) Each main pump must be used that is necessary for each operating condition and attitude for which compliance with this paragraph is shown, and the appropriate emergency pump must be substituted for each main pump so used.

(iii) If there is a fuel flowmeter, it must be blocked and the fuel must flow through the meter or its bypass. (See AMC 25J955(a)(2)(iii).)

(b) For essential APUs:

If an APU can be supplied with fuel from more than one tank, the fuel system must, in addition to having appropriate manual switching capability, be designed to prevent interruption of fuel flow to that APU, without attention by the flight crew, when any tank supplying fuel to that APU is depleted of usable fuel during normal operation, and any other tank, that normally supplies fuel to that APU, contains usable fuel.

[Amdt 25/1]

AMC 25J955(a)(2)(iii) Fuel Flow

ED Decision 2005/006/R

The word "blocked" should be interpreted to mean "with the moving parts fixed in the position for maximum pressure drop".

[Amdt 25/1]

CS 25J961 Fuel system hot weather operation

ED Decision 2005/006/R

For essential APUs:

(a) The fuel supply of an APU must perform satisfactorily in hot weather operation. It must be shown that the fuel system from the tank outlet to the APU is pressurised under all intended operations so as to prevent vapour formation. Alternatively, it must be shown that there is no evidence of vapour lock or other malfunctioning during a climb from the altitude of the airport selected by the applicant to the maximum altitude established as an operating limitation under CS 25J1527, with the APU operating at the most critical conditions for vapour formation but not exceeding the maximum essential load conditions. If the fuel supply is dependant on the same fuel pumps or fuel supply as the main engines, the main engines must be operated at maximum continuous power. The fuel temperature must be at least 43°C at the start of the climb.

(b) The test prescribed in sub-paragraph (a) of this paragraph may be performed in flight or on the ground under closely simulated flight conditions. If a flight test is performed in weather cold enough to interfere with the proper conduct of the test, the fuel tank surfaces, fuel lines, and other fuel system parts subject to cold air must be insulated to simulate, insofar as practicable, flight in hot weather.

[Amdt 25/1]

CS 25J977 Fuel Tank Outlet

ED Decision 2005/006/R

For essential APUs:

(a) There must be a fuel strainer for the fuel tank outlet or for the booster pump. This strainer must prevent the passage of any object that could restrict fuel flow or damage any fuel system component.

(b) The clear area of each fuel tank outlet strainer must be at least five times the area of the outlet line.

(c) The diameter of each strainer must be at least that of the fuel tank outlet.

(d) Each finger strainer must be accessible for inspection and cleaning.

[Amdt 25/1]

CS 25J991 Fuel Pumps

ED Decision 2005/006/R

For essential APUs:

(a) Main pumps. Each fuel pump required for proper essential APU operation, or required to meet the fuel system requirements of this subpart (other than those in sub-paragraph (b) of this paragraph), is a main pump. For each main pump, provision must be made to allow the bypass of each positive displacement fuel pump other than a fuel pump approved as part of the APU.

(b) Emergency pumps. There must be emergency pumps or another main pump to feed an essential APU immediately after failure of any main pump (other than a fuel pump approved as part of the APU).

[Amdt 25/1]

AMC 25J991 Fuel Pumps

ED Decision 2005/006/R

If the fuel supply to the APU is taken from the fuel supply to the main engine, no separate pumps need be provided for the APU.

[Amdt 25/1]

CS 25J993 Fuel system lines and fittings

ED Decision 2005/006/R

(a) Each fuel line must be installed and supported to prevent excessive vibration and to withstand loads due to fuel pressure and accelerated flight conditions.

(b) Each fuel line connected to components of the aeroplane between which relative motion could exist must have provisions for flexibility.

(c) Each flexible connection in fuel lines that may be under pressure and subjected to axial loading must use flexible hose assemblies.

(d) Flexible hose must be approved or must be shown to be suitable for the particular application.

(e) No flexible hose that might be adversely affected by exposure to high temperatures may be used where excessive temperatures will exist during operation or after an APU shut-down.

(f) Each fuel line within the fuselage must be designed and installed to allow a reasonable degree of deformation and stretching without leakage.

[Amdt 25/1]

CS 25J994 Fuel system components

ED Decision 2005/006/R

Fuel system components in the APU compartment or in the fuselage must be protected from damage which could result in spillage of enough fuel to constitute a fire hazard as a result of a wheels-up landing on a paved runway.

[Amdt 25/1]

CS 25J995 Fuel valves

ED Decision 2005/006/R

In addition to the requirements of CS 25J1189 for shut-off means, each fuel valve must be supported so that no loads resulting from their operation or from accelerated flight conditions are transmitted to the lines attached to the valve, unless adequate strength margins under all loading conditions are provided in the lines and connections.

[Amdt 25/1]

CS 25J997 Fuel strainer or filter

ED Decision 2005/006/R

For essential APUs:

There must be a fuel strainer or filter between the fuel tank outlet and the inlet of either the fuel metering device or an APU driven positive displacement pump, whichever is nearer the fuel tank outlet. This fuel strainer or filter must:

(a) Be accessible for draining and cleaning and must incorporate a screen or element which is easily removable;

(b) Have a sediment trap and drain except that it need not have a drain if the strainer or filter is easily removable for drain purposes;

(c) Be mounted so that its weight is not supported by the connecting lines or by the inlet or outlet connections of the strainer or filter itself, unless adequate strength margins under all loading conditions are provided in the lines and connections; and

(d) Have the capacity (with respect to operating limitations established for the APU) to ensure that APU fuel system functioning is not impaired, with the fuel contaminated to a degree (with respect to particle size and density) that is greater than that established for the APU in CS-APU 250.

[Amdt 25/1]

OIL SYSTEM

CS25J1011 Oil System General

ED Decision 2005/006/R

(a) Each APU must have an independent oil system that can supply it with an appropriate quantity of oil at a temperature not above that safe for continuous operation.

(b) The usable oil capacity may not be less than the product of the endurance of the aeroplane and the maximum allowable oil consumption of the APU plus a suitable margin to ensure system circulation.

[Amdt 25/1]

CS 25J1017 Oil lines and fittings

ED Decision 2005/006/R

(a) Each oil line must meet the requirements of CS 25J993 and each oil line and fitting in any designated fire zone must meet the requirements of CS 25J1183.

(b) Breather lines must be arranged so that:

(1) Condensed water vapour that might freeze and obstruct the line cannot accumulate at any point;

(2) The breather discharge does not constitute a fire hazard;

(3) The breather does not discharge into the APU air intake system.

[Amdt 25/1]

CS 25J1019 Oil Filter

ED Decision 2005/006/R

Where there is a filter in the APU lubrication system through which all the oil flows, it must be constructed and installed so that oil may flow at an acceptable rate through the rest of the system with the filter element completely blocked. An impending filter by-pass indication is required.

[Amdt 25/1]

CS 25J1021 Oil system drains

ED Decision 2005/006/R

A drain (or drains) must be provided to allow safe drainage of the oil system. Each drain must:

(a) Be accessible; and

(b) Have manual or automatic means for positive locking in the closed position.

[Amdt 25/1]

CS 25J1023 Oil radiators

ED Decision 2005/006/R

Each oil radiator must be able to withstand, without failure, any vibration, inertia, and oil pressure load to which it would be subjected in operation.

[Amdt 25/1]

CS 25J1025 Oil valves

ED Decision 2005/006/R

(a) Each oil shut-off must meet the requirements of CS 25J1189.

(b) Each oil valve must have positive stops or suitable index provisions in the "on'' and "off'' positions and must be supported so that no loads resulting from its operation or from accelerated flight conditions are transmitted to the lines attached to the valve, unless adequate strength margins under all loading conditions are provided in the lines and connections.

[Amdt 25/1]

COOLING

CS 25J1041 General

ED Decision 2005/006/R

The APU cooling provisions must be able to maintain the temperatures of APU components and fluids within the temperature limits established for these components and fluids, under critical ground and flight operating conditions, and after normal APU shutdown.

[Amdt 25/1]

AMC 25J1041 General

ED Decision 2005/006/R

The need for additional tests, if any, in hot climatic conditions should take account of any tests made by the APU constructor to establish APU performance and functioning characteristics and of satisfactory operating experience of similar power units installed in other types of aeroplane.

The maximum climatic conditions for which compliance will be established should be declared and this should not be less severe than the ICAO Intercontinental Maximum Standard Climate (37·8°C (100°F) at sea-level). If the tests are conducted under conditions which deviate from the maximum declared ambient temperature, the maximum temperature deviation should not normally exceed 13·9°C (25°F).

[Amdt 25/1]

CS 25J1043 Cooling tests

ED Decision 2005/006/R

(a) General. Compliance with CS 25J1041 must be shown by tests, under critical conditions. For these tests, the following apply:

(1) If the tests are conducted under conditions deviating from the maximum ambient atmospheric temperature, the recorded APU temperatures must be corrected under sub-paragraph (c) of this paragraph.

(2) No corrected temperatures determined under sub-paragraph (a)(1) of this paragraph may exceed established limits.

(b) Maximum ambient atmospheric temperature. A maximum ambient atmospheric temperature corresponding to sea level conditions must be established. The temperature lapse rate is 2.0°C per 300 metres of altitude above sea level until a temperature of -56.5°C is reached, above which altitude, the temperature is considered constant at -56.5°C.

(c) Correction factor. Unless a more rational correction applies, temperatures of APU fluids and components for which temperature limits are established, must be corrected by adding to them the difference between the maximum ambient atmospheric temperature and the temperature of the ambient air at the time of the first occurrence of the maximum component or fluid temperature recorded during the cooling test.

[Amdt 25/1]

CS 25J1045 Cooling test procedures

ED Decision 2005/006/R

(a) Compliance with CS 25J1041 must be shown for the critical conditions that correspond to the applicable performance requirements. The cooling tests must be conducted with the aeroplane in the configuration, and operating under the conditions that are critical relative to cooling. For the cooling tests, a temperature is 'stabilised' when its rate of change is less than 1°C per minute.

(b) Temperatures must be stabilised prior to entry into each critical condition being investigated, unless the entry condition normally is not one during which component and APU fluid temperatures would stabilise (in which case, operation through the full entry condition must be conducted before entry into the critical condition being investigated in order to allow temperatures to reach their natural levels at the time of entry).

(c) Cooling tests for each critical condition must be continued until:

(1) The component and APU fluid temperatures stabilise;

(2) The stage of flight is completed; or

(3) An operating limitation is reached.

[Amdt 25/1]

AIR INTAKE AND BLEED AIR DUCT SYSTEMS

CS 25J1091 Air intake

ED Decision 2005/006/R

The air intake system for the APU:

(a) Must supply the air required by the APU under each operating condition for which certification is requested,

(b) May not draw air from within the APU compartment or other compartments unless the inlet is isolated from the APU accessories and power section by a firewall,

(c) Must have means to prevent hazardous quantities of fuel leakage or overflow from drains, vents, or other components of flammable fluid systems from entering,

(d) Must be designed to prevent water or slush on the runway, taxiway, or other airport operating surface from being directed into the air intake system in hazardous quantities,

(e) Must be located or protected so as to minimise the ingestion of foreign matter during takeoff, landing, and taxiing.

[Amdt 25/1]

CS 25J1093 Air intake system icing protection

ED Decision 2005/006/R

(a) Each non-essential APU air intake system, including any screen if used, which does not comply with CS 25J1093(b) will be restricted to use in non-icing conditions, unless it can be shown that the APU complete with air intake system, if subjected to icing conditions, will not affect the safe operation of the aeroplane.

(b) For essential APUs:

Each essential APU air intake system, including screen if used, must enable the APU to operate over the range of conditions for which certification is required without adverse effect or serious loss of power (see AMC 25J1093(b)):

(1) Under the icing conditions specified in Appendix C; and

(2) In falling and blowing snow within the limitations established for the aeroplane for such operations.

[Amdt 25/1]

AMC 25J1093(b) Essential APU Air Intakes

ED Decision 2005/006/R

1 General.

Two ways of showing compliance with CS 25J1093(b) are given.

1.1 Method 1. Method 1 is an arbitrary empirical method based on United Kingdom and French practice. This method is acceptable to all participating countries.

1.2 Method 2. Method 2 is a general approach based on US practice in applying FAR Part 25, Appendix C. If this method is used, each application will have to be evaluated on its merits.

2 Method 1

2.1 In establishing compliance with the requirements of CS 25J1093(b), reference should be made to AMC 25.1419, paragraph 1.

2.2 The intake may be tested with the APU in accordance with the requirements of CS-APU 510 and the Advisory Material for the testing of APUs in Icing Conditions.

2.3 When the intake is assessed separately it should be shown that the effects of intake icing would not invalidate the icing tests of CS-APU. Factors to be considered in such evaluation are:

a. Distortion of the airflow and partial blockage of the intake.

b. The shedding into the APU of intake ice of a size greater than the APU is known to be able to ingest.

c. The icing of any APU sensing devices, other subsidiary intakes or equipment contained within the intake.

d. The time required to bring the protective system into full operation.

2.4 Tests in Ice-forming Conditions. An acceptable method of showing compliance with the requirements of CS 25J1093(b), including Appendix C, is given in this paragraph.

2.4.1 When the tests are conducted in non-altitude conditions, the system power supply and the external aero-dynamic and atmospheric conditions should be so modified as to represent the required altitude conditions as closely as possible. The altitudes to be represented should be as indicated in Table 1 for simulated tests, or that appropriate to the desired temperature in flight tests, except that the test altitude need not exceed any limitations proposed for approval. The appropriate intake incidences or the most critical incidence, should be simulated.

2.4.2 Two tests (which may be separated or combined) should be conducted at each temperature condition of Table 1, at or near the indicated altitude -

a) 30 minutes in the conditions of Table 1 column (a) appropriate to the temperature.

b) Three repetitions of 5 km in the conditions of Table 1, column (b), appropriate to the temperature followed by 5 km in clear air.

TABLE 1

Ambient air temperature	Altitude		Liquid water content (g/m³)		Mean effective droplet diameter
(°C)	(ft)	(m)	(a)	(b)	(µm)
-10	17000	5182	0.6	2.2	20
-20	20000	6096	0.3	1.7	
-30	25000	7620	0.2	1.0	

2.4.3 At the conclusion of each of the tests of 2.4.2 the ice accretion should be such as not to adversely affect the subsequent running and functioning of the APU.

2.4.4 If the APU intake contains features or devices which could be affected by freezing fog conditions then in addition to the above tests of 2.4.2 a separate test on these parts or devices should be conducted for a duration of 30 minutes with the heat supply to the tested parts as would be available with the APU set to the minimum ground idle conditions approved for use in icing in an atmosphere of -2°C and a liquid water concentration of 0·3 g/m^3. The mean effective droplet size for the test should be 20µm. At the end of the period the ice accretion on the tested part should not prevent its proper functioning nor should the ice be of such size as to hazard the APU if shed.

3 Method 2

3.1 In establishing compliance with the requirements of CS 25J1093(b), reference should be made to CS 25.1419 and AMC 25.1419.

3.2 The intake may be tested with the APU in accordance with a programme of tests which results from an analysis of the icing conditions and the APU conditions appropriate to the installation.

3.3 When the intake is assessed separately it should be shown that the effects of intake icing would not invalidate any APU certification tests. Factors to be considered in such evaluation are -

a. Distortion of the airflow and partial blockage of the intake.

b. The shedding into the APU of intake ice of a size greater than the APU is known to be able to ingest.

c. The icing of any APU sensing devices, other subsidiary intakes or equipment contained within the intake.

d. The time required to bring the protective system into full operation.

3.4 When tests are conducted in non-altitude conditions, the system power supply and the external aerodynamic and atmospheric conditions should be so modified as to represent the altitude condition as closely as possible. The appropriate intake incidences or the most critical incidence, should be simulated.

3.5 Following the analysis required in CS 25.1419(b), which will determine the critical icing conditions within the envelope of icing conditions defined by Appendix C Figures 1 to 3 and Appendix C Figures 4 to 6, tests should be conducted at such conditions as are required to demonstrate the adequacy of the design points.

3.6 At the conclusion of each of the tests the ice accretion should be such as not to adversely affect the subsequent running and functioning of the APU.

3.7 If the APU intake contains features or devices which could be affected by freezing fog conditions then a separate assessment for these parts should be conducted assuming a duration of 30 minutes and an atmosphere of -2°C and a liquid water concentration of 0·3 g/m^3, with the heat supply to the part as would be available with the APU set to the minimum ground idle conditions approved for use in icing. The mean effective droplet size should be 20µm. At the end of the period the ice accretion on the part should not prevent its proper functioning, nor should the ice be of such size as to hazard the engine if shed.

[Amdt 25/1]

CS 25J1103 Air intake system ducts

ED Decision 2005/006/R

(a) Each air intake system duct must be:

(1) Drained to prevent accumulation of hazardous quantities of flammable fluid and moisture in the ground attitude. The drain(s) must not discharge in locations that might cause a fire hazard; and

(2) Constructed of materials that will not absorb or trap sufficient quantities of flammable fluids such as to create a fire hazard.

(b) Each duct must be:

(1) Designed to prevent air intake system failures resulting from reverse flow, APU surging, or inlet door closure; and

(2) Fireproof within the APU compartment and for a sufficient distance upstream of the APU compartment to prevent hot gases reverse flow from burning through the APU air intake system ducts and entering any other compartment or area of the aeroplane in which a hazard would be created resulting from the entry of hot gases.

The materials used to form the remainder of the air intake system duct and plenum chamber of the APU must be capable of resisting the maximum heat conditions likely to occur.

(c) Each duct connected to components between which relative motion could exist must have means for flexibility.

[Amdt 25/1]

CS 25J1106 Bleed air duct systems

ED Decision 2005/006/R

(a) For APU bleed air duct systems, no hazard may result if a duct failure occurs at any point between the air duct source and the aeroplane unit served by the bleed air.

(b) Each duct connected to components between which relative motion could exist must have a means for flexibility.

(c) Where the airflow delivery from the APU and main engine is delivered to a common manifold system, precautions must be taken to minimise the possibility of a hazardous condition due to reverse airflow through the APU resulting from malfunctions of any component in the system.

[Amdt 25/1]

EXHAUST SYSTEM

CS 25J1121 General

ED Decision 2005/006/R

(a) Each exhaust system must ensure safe disposal of exhaust gases without fire hazard or carbon monoxide contamination in any personnel compartment. For test purposes, any acceptable carbon monoxide detection method may be used to show the absence of carbon monoxide.

(b) Each exhaust system part with a surface hot enough to ignite flammable fluids or vapours must be located or shielded so that leakage from any system carrying flammable fluids or vapours will not result in a fire caused by impingement of the fluids or vapours on any part of the exhaust system including shields for the exhaust system.

(c) Each component that hot exhaust gases could strike, or that could be subjected to high temperatures from exhaust system parts, must be fireproof. All exhaust system components must be separated by fireproof shields from adjacent parts of the aeroplane that are outside the APU compartment.

(d) No exhaust gases may discharge so as to cause a fire hazard with respect to any flammable fluid vent or drain.

(e) Reserved

(f) Each exhaust system component must be ventilated to prevent points of excessively high temperature.

(g) Each exhaust shroud must be ventilated or insulated to avoid, during normal operation, a temperature high enough to ignite any flammable fluids or vapours external to the shroud.

[Amdt 25/1]

CS 25J1123 Exhaust piping

ED Decision 2005/006/R

(a) Exhaust piping must be heat and corrosion resistant, and must have provisions to prevent failure due to expansion by operating temperatures.

(b) Piping must be supported to withstand any vibration and inertia loads to which it would be subjected in operation; and

(c) Piping connected to components between which relative motion could exist must have means for flexibility.

[Amdt 25/1]

APU CONTROLS AND ACCESSORIES

CS 25J1141 APU controls

ED Decision 2005/006/R

(a) Means must be provided on the flight deck for starting, stopping, and emergency shutdown of each installed APU. Each control must:

(1) Be located, arranged, and designed under CS 25.777(a)(b)(c)(d) and marked under CS 25.1555(a); and

(2) Be located so that it cannot be inadvertently operated by persons entering, leaving, or moving normally on the flight deck; and

(3) Be able to maintain any set position without constant attention by flight crew members and without creep due to control loads or vibration; and

(4) Have sufficient strength and rigidity to withstand operating loads without failure and without excessive deflection; and

(5) For flexible controls, be approved or must be shown to be suitable for the particular application.

(b) APU valve controls located in the flight deck must have:

(1) For manual valves, positive stops or, in the case of fuel valves, suitable index provisions in the open and closed positions,

(2) In the case of valves controlled from the flight deck other than by mechanical means, where the correct functioning of the valve is essential for the safe operation of the aeroplane, a valve position indicator which senses directly that the valve has attained the position selected must be provided, unless other indications in the flight deck give the flight crew a clear indication that the valve has moved to the selected position. A continuous indicator need not be provided.

(c) For unattended operation, the APU installation must:

(1) Provide means to automatically shutdown the APU for the following conditions:

(i) Exceedence of any APU parameter limit or existence of a detectable hazardous APU operating condition; and

(ii) Bleed air duct failure between the APU and aeroplane unit served by the bleed air, unless it can be shown that no hazard exists to the aeroplane.

(2) Provide means to automatically shut off flammable fluids per CS 25J1189 in case of fire in the APU compartment.

(d) APU controls located elsewhere on the aeroplane, which are in addition to the flight deck controls, must meet the following requirements:

(1) Each control must be located so that it cannot be inadvertently operated by persons entering, leaving, or moving normally in the area of the control; and

(2) Each control must be able to maintain any set position without creep due to control loads, vibration, or other external forces resulting from the location.

(e) The portion of each APU control located in a designated fire zone that is required to be operated in the event of a fire must be at least fire resistant.

[Amdt 25/1]

CS 25J1163 APU accessories

ED Decision 2005/006/R

(a) APU mounted accessories must be approved for installation on the APU concerned and use the provisions of the APU for mounting.

(b) Electrical equipment subject to arcing or sparking must be installed to minimise the probability of contact with any flammable fluids or vapours that might be present in a free state.

(c) For essential APUs:

If continued rotation of a failed aeroplane accessory driven by the APU affects the safe operation of the aeroplane, there must be means to prevent rotation without interfering with the continued operation of the APU.

[Amdt 25/1]

CS 25J1165 APU ignition systems

ED Decision 2005/006/R

Each APU ignition system must be independent of any electrical circuit except those used for assisting, controlling, or analysing the operation of that system.

[Amdt 25/1]

APU FIRE PROTECTION

CS 25J1181 Designated fire zones

ED Decision 2005/006/R

(a) Any APU compartment is a designated fire zone.

(b) Each designated fire zone must meet the requirements of CS 25J1185 through CS 25J1203.

[Amdt 25/1]

CS 25J1183 Lines, fittings and components

ED Decision 2005/006/R

(a) Except as provided in sub-paragraph (b) of this paragraph, each line, fitting, and other component carrying flammable fluid in any area subject to APU fire conditions, and each component which conveys or contains flammable fluid in a designated fire zone must be fire resistant, except that flammable fluid tanks and supports in a designated fire zone must be fireproof or be enclosed by a fireproof shield unless damage by fire to any non-fireproof part will not cause leakage or spillage of flammable fluid. Components must be shielded or located to safeguard against the ignition of leaking flammable fluid.

(b) Sub-paragraph (a) of this paragraph does not apply to:

(1) Lines and fittings already approved as part of an APU, and

(2) Vent and drain lines, and their fittings, whose failure will not result in, or add to, a fire hazard.

(c) All components, including ducts, within a designated fire zone which, if damaged by fire could result in fire spreading to other regions of the aeroplane, must be fireproof. Those components within a designated fire zone, which could cause unintentional operation of, or inability to operate essential services or equipment, must be fireproof.

[Amdt 25/1]

CS 25J1185 Flammable fluids

ED Decision 2005/006/R

(a) No tank or reservoir that is a part of a system containing flammable fluids or gases may be in a designated fire zone unless the fluid contained, the design of the system, the materials used in the tank, the shut-off means, and all connections, lines, and controls provide a degree of safety equal to that which would exist if the tank or reservoir were outside such a zone.

(b) There must be at least 12,7 mm of clear airspace between each tank or reservoir and each firewall or shroud isolating a designated fire zone.

(c) Absorbent materials close to flammable fluid system components that might leak must be covered or treated to prevent the absorption of hazardous quantities of fluids.

[Amdt 25/1]

CS 25J1187 Drainage and ventilation of fire zones

ED Decision 2005/006/R

(a) There must be complete drainage of each part of each designated fire zone to minimise the hazards resulting from failure or malfunctioning of any component containing flammable fluids. The drainage means must be:

(1) Effective under conditions expected to prevail when drainage is needed; and

(2) Arranged so that no discharged fluid will cause an additional fire hazard.

(b) Each designated fire zone must be ventilated to prevent the accumulation of flammable vapours.

(c) No ventilation opening may be where it would allow the entry of flammable fluids, vapours, or flame from other zones.

(d) Each ventilation means must be arranged so that no discharged vapours will cause an additional fire hazard.

(e) Unless the extinguishing agent capacity and rate of discharge are based on maximum air flow through a zone, there must be means to allow the crew to shut off sources of forced ventilation to any fire zone.

[Amdt 25/1]

CS 25J1189 Shut-off means

ED Decision 2005/006/R

(a) Each APU compartment specified in CS 25J1181(a) must have a means to shut-off or otherwise prevent hazardous quantities of flammable fluids, from flowing into, within, or through any designated fire zone, except that shut-off means are not required for:

(1) Lines, fittings and components forming an integral part of an APU; and

(2) Oil systems for APU installations in which all external components of the oil system, including the oil tanks, are fireproof.

(b) The closing of any fuel shut-off valve for any APU may not make fuel unavailable to the main engines.

(c) Operation of any shut-off may not interfere with the later emergency operation of other equipment.

(d) Each flammable fluid shut-off means and control must be fireproof or must be located and protected so that any fire in a fire zone will not affect its operation.

(e) No hazardous quantity of flammable fluid may drain into any designated fire zone after shut-off.

(f) There must be means to guard against inadvertent operation of the shut-off means and to make it possible for the crew to reopen the shut-off means in flight after it has been closed.

(g) Each tank to APU shut-off valve must be located so that the operation of the valve will not be affected by the APU mount structural failure.

(h) Each shut-off valve must have a means to relieve excessive pressure accumulation unless a means for pressure relief is otherwise provided in the system.

[Amdt 25/1]

CS 25J1191 Firewalls

ED Decision 2005/006/R

(a) Each APU must be isolated from the rest of the aeroplane by firewalls, shrouds, or equivalent means.

(b) Each firewall and shroud must be:

(1) Fireproof;

(2) Constructed so that no hazardous quantity of air, fluid, or flame can pass from the compartment to other parts of the aeroplane;

(3) Constructed so that each opening is sealed with close fitting fireproof grommets, bushings, or firewall fittings; and

(4) Protected against corrosion.

[Amdt 25/1]

CS 25J1193 APU compartment

ED Decision 2005/006/R

(a) Each compartment must be constructed and supported so that it can resist any vibration, inertia, and air load to which it may be subjected in operation.

(b) Each compartment must meet the drainage and ventilation requirements of CS 25J1187.

(c) Reserved

(d) Each part of the compartment subject to high temperatures due to its nearness to exhaust system parts or exhaust gas impingement must be fireproof.

(e) Each aeroplane must:

(1) Be designed and constructed so that no fire originating in any APU fire zone can enter, either through openings or by burning through external skin, any other zone or region where it would create additional hazards,

(2) Meet sub-paragraph (e)(1) of this paragraph with the landing gear retracted (if applicable), and

(3) Have fireproof skin in areas subject to flame if a fire starts in the APU compartment.

[Amdt 25/1]

CS 25J1195 Fire extinguisher systems

ED Decision 2005/006/R

(a) There must be a fire extinguisher system serving the APU compartment.

(b) The fire extinguishing system, the quantity of the extinguishing agent, the rate of discharge, and the discharge distribution must be adequate to extinguish fires. An individual 'one shot' system is acceptable. (See AMC 25J1195(b).)

(c) The fire-extinguishing system for an APU compartment must be able to simultaneously protect each zone of the APU compartment for which protection is provided.

[Amdt 25/1]

AMC 25J1195(b) Fire extinguisher systems

ED Decision 2005/006/R

Acceptable methods to establish the adequacy of the fire extinguisher system are laid down in FAA Advisory Circular 20 – 100 dated 21 September 1977.

[Amdt 25/1]

CS 25J1197 Fire extinguishing agents

ED Decision 2005/006/R

(a) Fire extinguishing agents must:

(1) Be capable of extinguishing flames emanating from any burning of fluids or other combustible materials in the area protected by the fire extinguishing system; and

(2) Have thermal stability over the temperature range likely to be experienced in the compartment in which they are stored.

(b) If any toxic extinguishing agent is used, provisions must be made to prevent harmful concentrations of fluid or fluid vapours (from leakage during normal operation of the aeroplane or as a result of discharging the fire extinguisher on the ground or in flight) from entering any personnel compartment, even though a defect may exist in the extinguishing system.

[Amdt 25/1]

CS 25J1199 Extinguishing agent containers

ED Decision 2005/006/R

(a) Each extinguishing agent container must have a pressure relief to prevent bursting of the container by excessive internal pressures.

(b) The discharge end of each discharge line from a pressure relief connection must be located so that discharge of the fire extinguishant agent would not damage the aeroplane. The line must be located or protected to prevent clogging caused by ice or other foreign matter.

(c) There must be a means for each fire extinguishing agent container to indicate that the container has discharged or that the charging pressure is below the established minimum necessary for proper functioning.

(d) The temperature of each container must be maintained, under intended operating conditions, to prevent the pressure in the container from:

(1) Falling below that necessary to provide an adequate rate of discharge; or

(2) Rising high enough to cause premature discharge.

(e) If a pyrotechnic capsule is used to discharge the extinguishing agent, each container must be installed so that temperature conditions will not cause hazardous deterioration of the pyrotechnic capsule.

[Amdt 25/1]

CS 25J1201 Fire extinguishing system materials

ED Decision 2005/006/R

(a) No material in any fire extinguishing system may react chemically with any extinguishing agent so as to create a hazard.

(b) Each system component in an APU compartment must be fireproof.

[Amdt 25/1]

CS 25J1203 Fire-detector system

ED Decision 2005/006/R

(a) There must be approved, quick acting fire or overheat detectors in each APU compartment in numbers and locations ensuring prompt detection of fire.

(b) Each fire detector system must be constructed and installed so that:

(1) It will withstand the vibration, inertia, and other loads to which it may be subjected in operation;

(2) There is a means to warn the crew in the event that the sensor or associated wiring within a designated fire zone is severed at one point, unless the system continues to function as a satisfactory detection system after the severing; and

(3) There is a means to warn the crew in the event of a short circuit in the sensor or associated wiring within a designated fire zone, unless the system continues to function as a satisfactory detection system after the short circuit.

(c) No fire or overheat detector may be affected by any oil, water, other fluids, or fumes that might be present.

(d) There must be means to allow the crew to check, in flight, the functioning of each fire or overheat detector electric circuit.

(e) Wiring and other components of each fire or overheat detector system in a fire zone must be at least fire-resistant.

(f) No fire or overheat detector system component for any fire zone may pass through another fire zone, unless:

(1) It is protected against the possibility of false warnings resulting from fires in zones through which it passes; or

(2) Each zone involved is simultaneously protected by the same detector and extinguishing system.

(g) Each fire detector system must be constructed so that when it is in the configuration for installation it will not exceed the alarm activation time approved for the detectors using the response time criteria specified in ETSO-2C11e or an acceptable equivalent, for the detector.

[Amdt 25/1]

CS 25J1207 Compliance

ED Decision 2005/006/R

Unless otherwise specified, compliance with the requirements of CS 25J1181 through CS 25J1203 must be shown by a full scale test or by one or more of the following methods:

(a) Tests of similar APU installations.

(b) Tests of components.

(c) Service experience of aircraft with similar APU installations.

(d) Analysis unless tests are specifically required.

[Amdt 25/1]

GENERAL

CS 25J1305 APU instruments

ED Decision 2005/006/R

(a) The following instruments are required for all installation:

(1) A fire warning indicator.

(2) An indication than an APU auto-shutdown has occurred.

(3) Any other instrumentation necessary to assist the flight crew in:

(i) Preventing the exceedence of established APU limits, and

(ii) Maintaining continued safe operation of the APU.

(4) Instrumentation per subparagraph (3) need not be provided if automatic features of the APU and its installation provide a degree of safety equal to having the parameter displayed directly.

(b) For essential APUs:

In addition to the items required by CS 25J1305(a), the following indicators are required for an essential APU installation :

(1) An indicator to indicate the functioning of the ice protection system, if such a system is installed; and

(2) An indicator to indicate the proper functioning of any heater used to prevent ice clogging of fuel system components.

[Amdt 25/1]

CS 25J1337 APU instruments

ED Decision 2005/006/R

(a) *Reserved*

(b) *Reserved*

(c) *Reserved*

(d) There must be a stick gauge or equivalent means to indicate the quantity of oil in each tank.

[Amdt 25/1]

OPERATING LIMITATIONS

CS 25J1501 General

ED Decision 2005/006/R

(a) *Reserved*

(b) The operating limitations and other information necessary for safe operation must be made available to the crew members as prescribed in CS 25J1549, 25J1551, and 25J1583.

[Amdt 25/1]

CS 25J1521 APU limitations

ED Decision 2005/006/R

The APU limitations must be established so that they do not exceed the corresponding approved limits for the APU and its systems. The APU limitations, including categories of operation, must be specified as operating limitations for the aeroplane.

[Amdt 25/1]

CS 25J1527 Ambient air temperature and operating altitude

ED Decision 2005/006/R

The extremes of the ambient air temperature and operating altitude for which operation is allowed, as limited by flight, structural, APU installation, functional, or equipment characteristics, must be established.

[Amdt 25/1]

MARKINGS AND PLACARDS

CS 25J1549 APU instruments

ED Decision 2005/006/R

For each APU instrument either a placard or colour markings or an acceptable combination must be provided to convey information on the maximum and (where applicable) minimum operating limits. Colour coding must comply with the following:

(a) Each maximum and, if applicable, minimum safe operating limit must be marked with a red radial or a red line;

(b) Each normal operating range must be marked with a green arc or green line, not extending beyond the maximum and minimum safe limits;

(c) Each precautionary operating range must be marked with a yellow arc or a yellow line; and

(d) Each APU speed range that is restricted because of excessive vibration stresses must be marked with red arcs or red lines.

[Amdt 25/1]

CS 25J1551 Oil quantity indicator

ED Decision 2005/006/R

Each oil quantity indicator must be marked with enough increments to indicate readily and accurately the quantity of oil.

[Amdt 25/1]

CS 25J1557 Miscellaneous markings and placards

ED Decision 2005/006/R

(a) *Reserved*

(b) APU fluid filler openings. The following applies:

(1) *Reserved*

(2) Oil filler openings must be marked at or near the filler cover with the word "oil".

[Amdt 25/1]

AEROPLANE FLIGHT MANUAL

CS 25J1583 Operating limitations

ED Decision 2005/006/R

APU limitations established under CS 25J1521 and information to explain the instrument markings provided under CS 25J1549 and CS 25J1551 must be furnished.

[Amdt 25/1]

APPENDICES TO CS-25

APPENDIX A

ED Decision 2003/2/RM

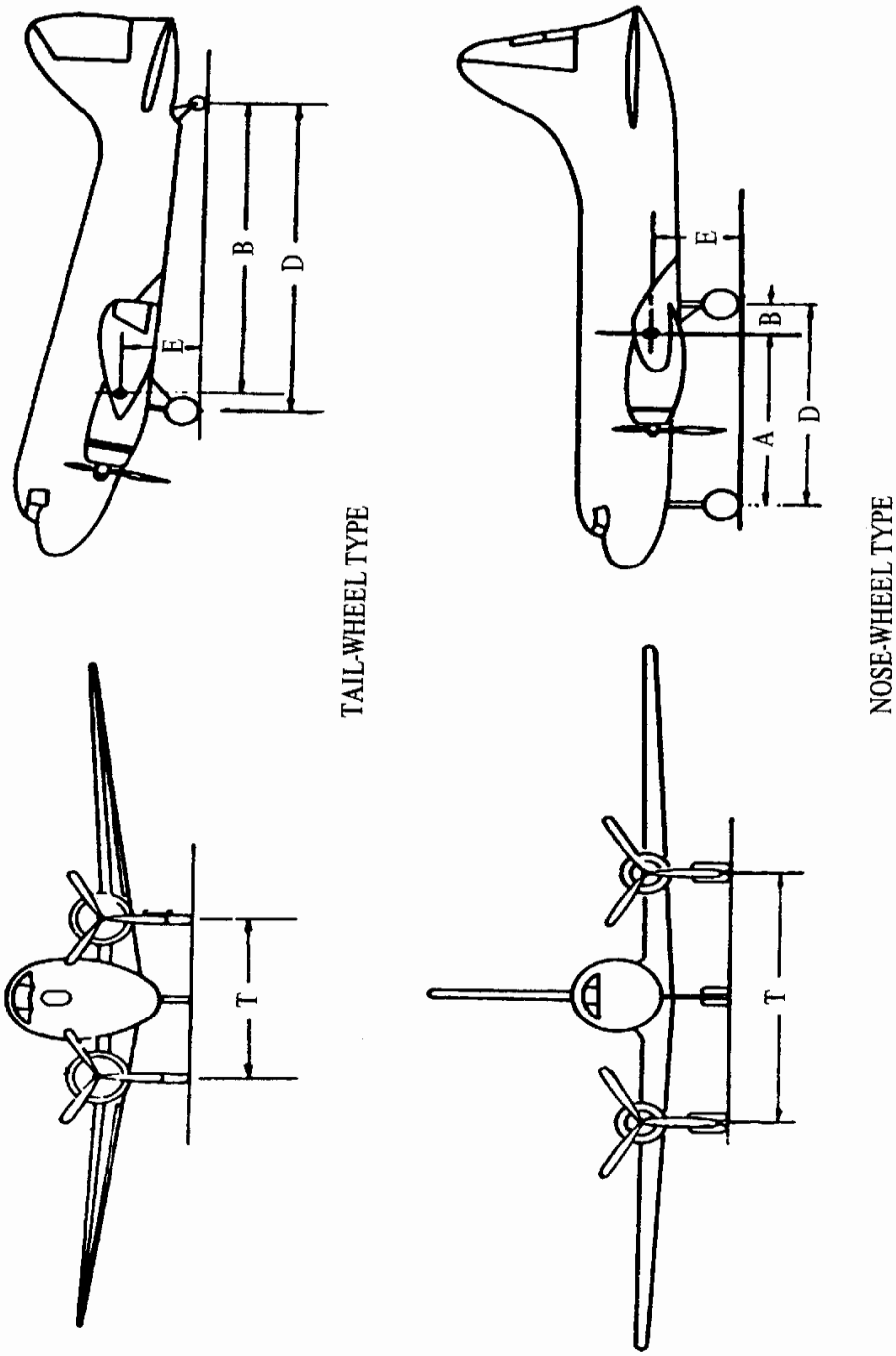

FIGURE 1 BASIC LANDING GEAR DIMENSION DATA

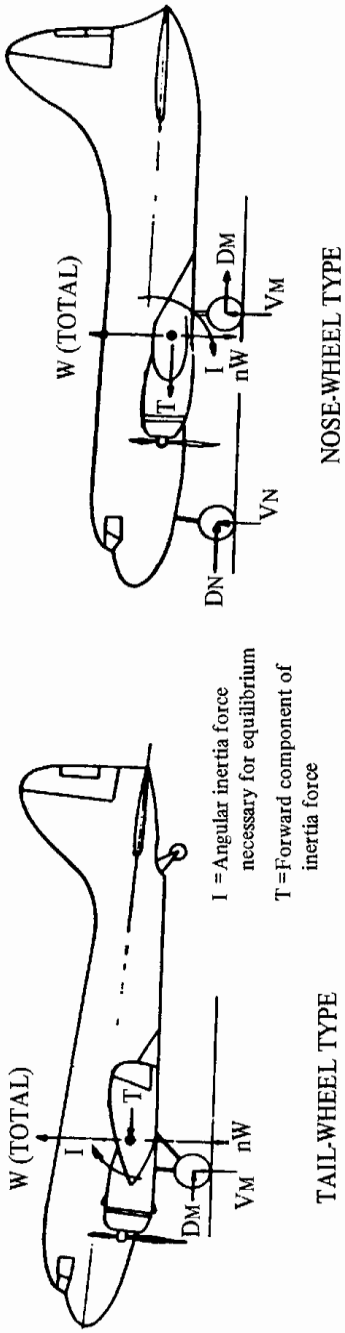

FIGURE 2 LEVEL LANDING

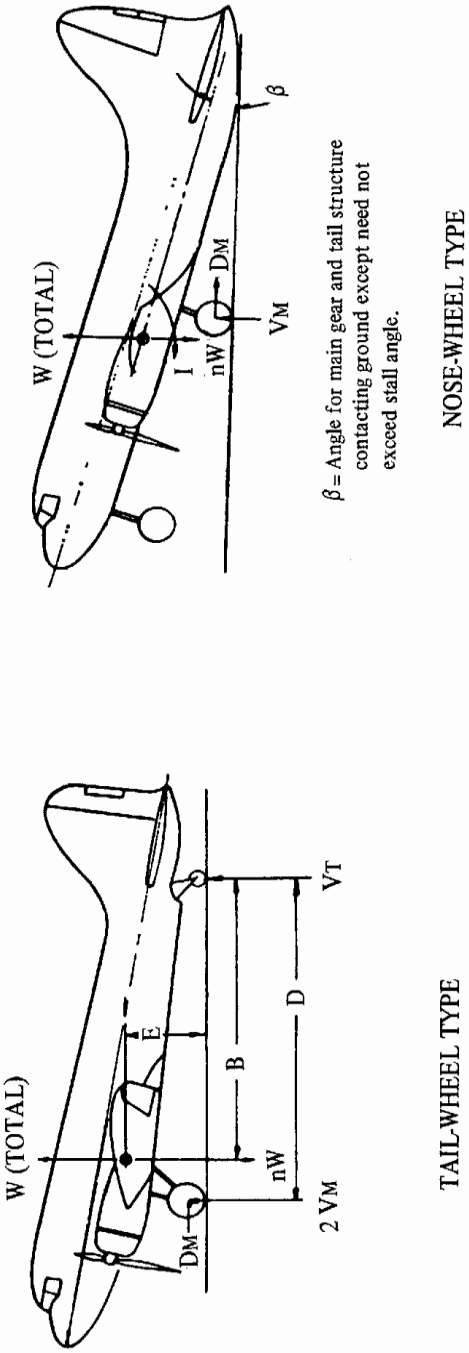

FIGURE 3 TAIL-DOWN LANDING

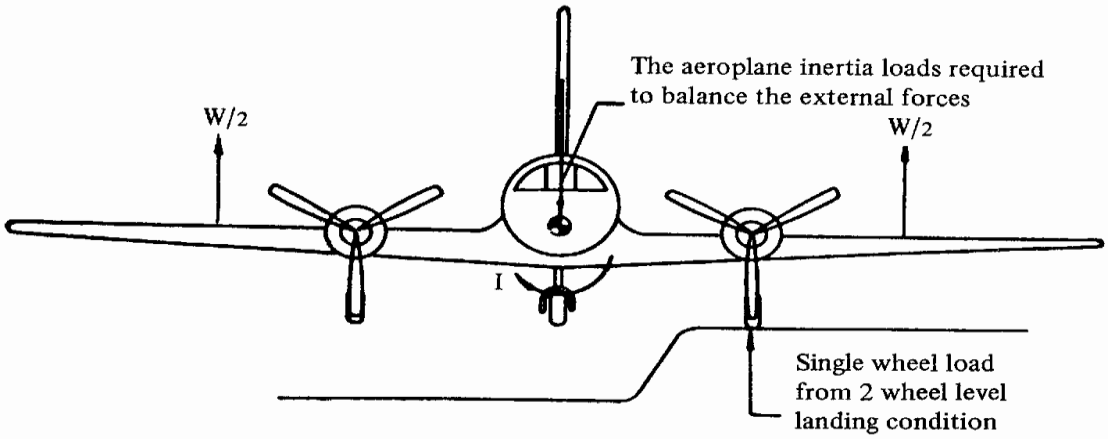

NOSE- OR TAIL-WHEEL TYPE

FIGURE 4 ONE-WHEEL LANDING

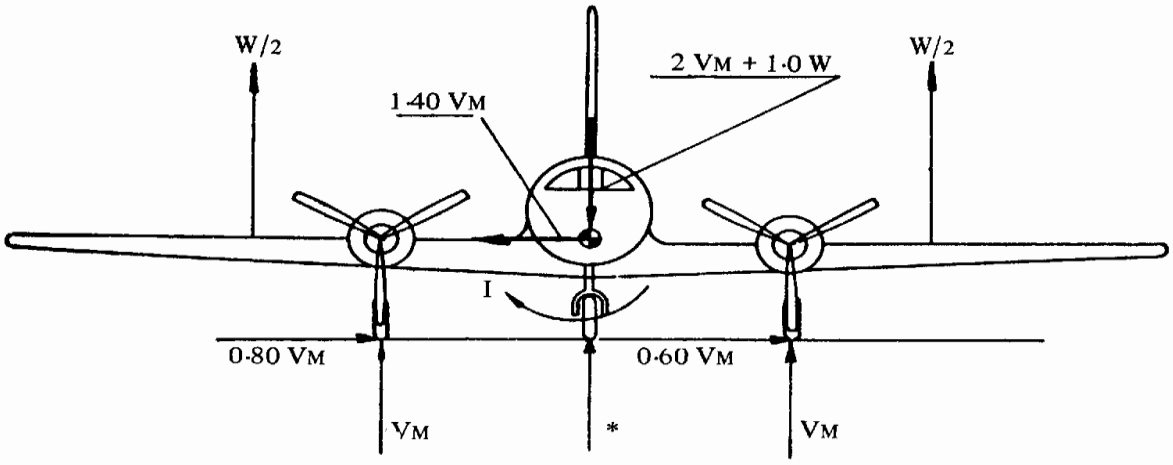

VM = One-half the maximum vertical ground reaction obtained at each main gear in the level landing conditions.

*Nose-gear ground reaction = 0

NOSE- OR TAIL-WHEEL TYPE AEROPLANE IN LEVEL ATTITUDE

FIGURE 5 LATERAL DRIFT LANDING

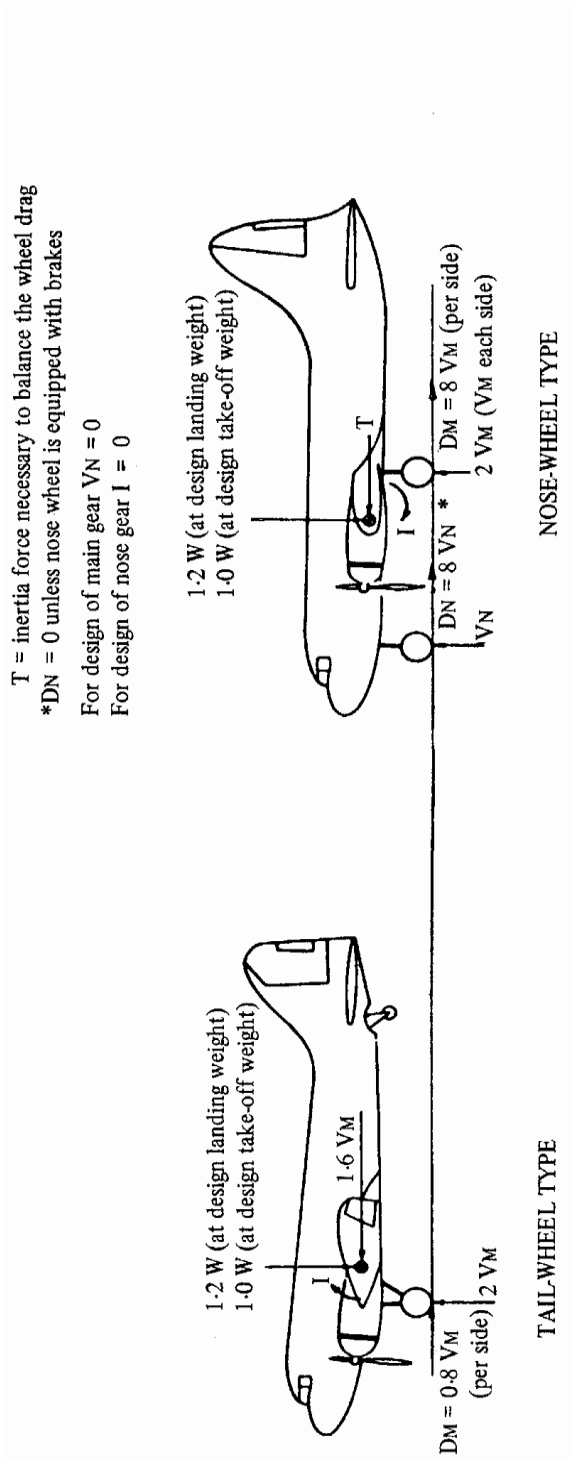

FIGURE 6 BRAKED ROLL

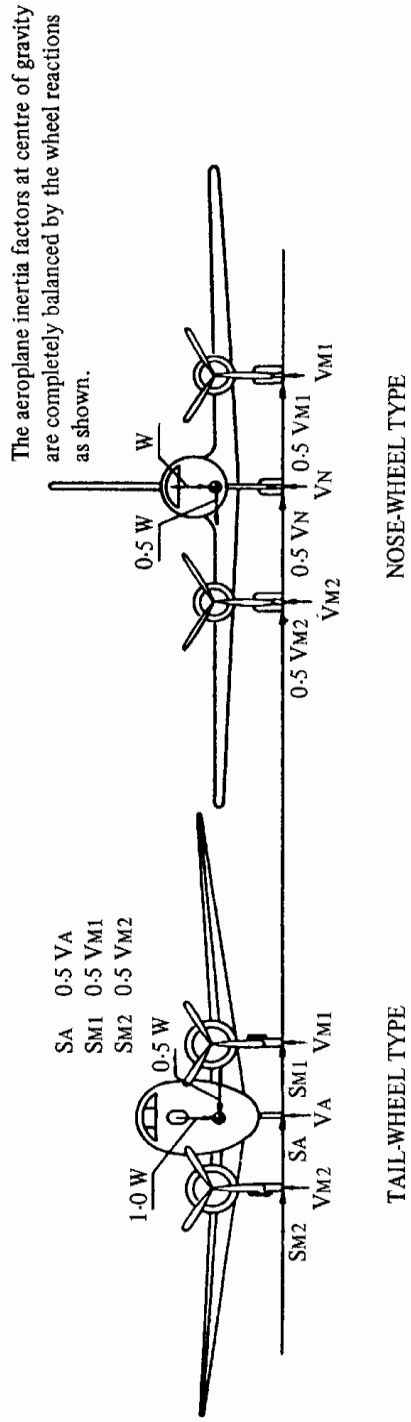

FIGURE 7 GROUND TURNING

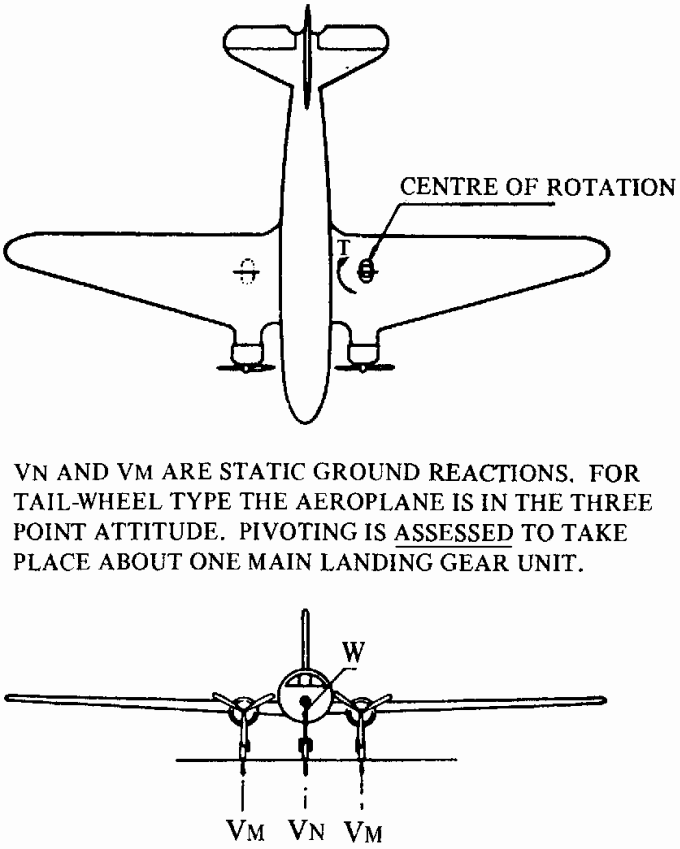

VN AND VM ARE STATIC GROUND REACTIONS. FOR TAIL-WHEEL TYPE THE AEROPLANE IS IN THE THREE POINT ATTITUDE. PIVOTING IS ASSESSED TO TAKE PLACE ABOUT ONE MAIN LANDING GEAR UNIT.

FIGURE 8 PIVOTING, NOSE- OR TAIL-WHEEL TYPE

APPENDIX C

ED Decision 2003/2/RM

(a) *Continuous maximum icing.* The maximum continuous intensity of atmospheric icing conditions (continuous maximum icing) is defined by the variables of the cloud liquid water content, the mean effective diameter of the cloud droplets, the ambient air temperature, and the interrelationship of these three variables as shown in Figure 1 of this Appendix. The limiting icing envelope in terms of altitude and temperature is given in Figure 2 of this Appendix. The interrelationship of cloud liquid water content with drop diameter and altitude is determined from Figures 1 and 2. The cloud liquid water content for continuous maximum icing conditions of a horizontal extent, other than 32.2 km (17·4 nautical miles), is determined by the value of liquid water content of Figure 1, multiplied by the appropriate factor from Figure 3 of this Appendix.

(b) *Intermittent maximum icing.* The intermittent maximum intensity of atmospheric icing conditions (intermittent maximum icing) is defined by the variables of the cloud liquid water content, the mean effective diameter of the cloud droplets, the ambient air temperature, and the interrelationship of these three variables as shown in Figure 4 of this Appendix. The limiting icing envelope in terms of altitude and temperature is given in Figure 5 of this Appendix. The interrelationship of cloud liquid water content with drop diameter and altitude is determined from Figures 4 and 5. The cloud liquid water content for intermittent maximum icing conditions of a horizontal extent, other than 4.8 km (2·6 nautical miles), is determined by the value of cloud liquid water content of Figure 4 multiplied by the appropriate factor in Figure 6 of this Appendix.

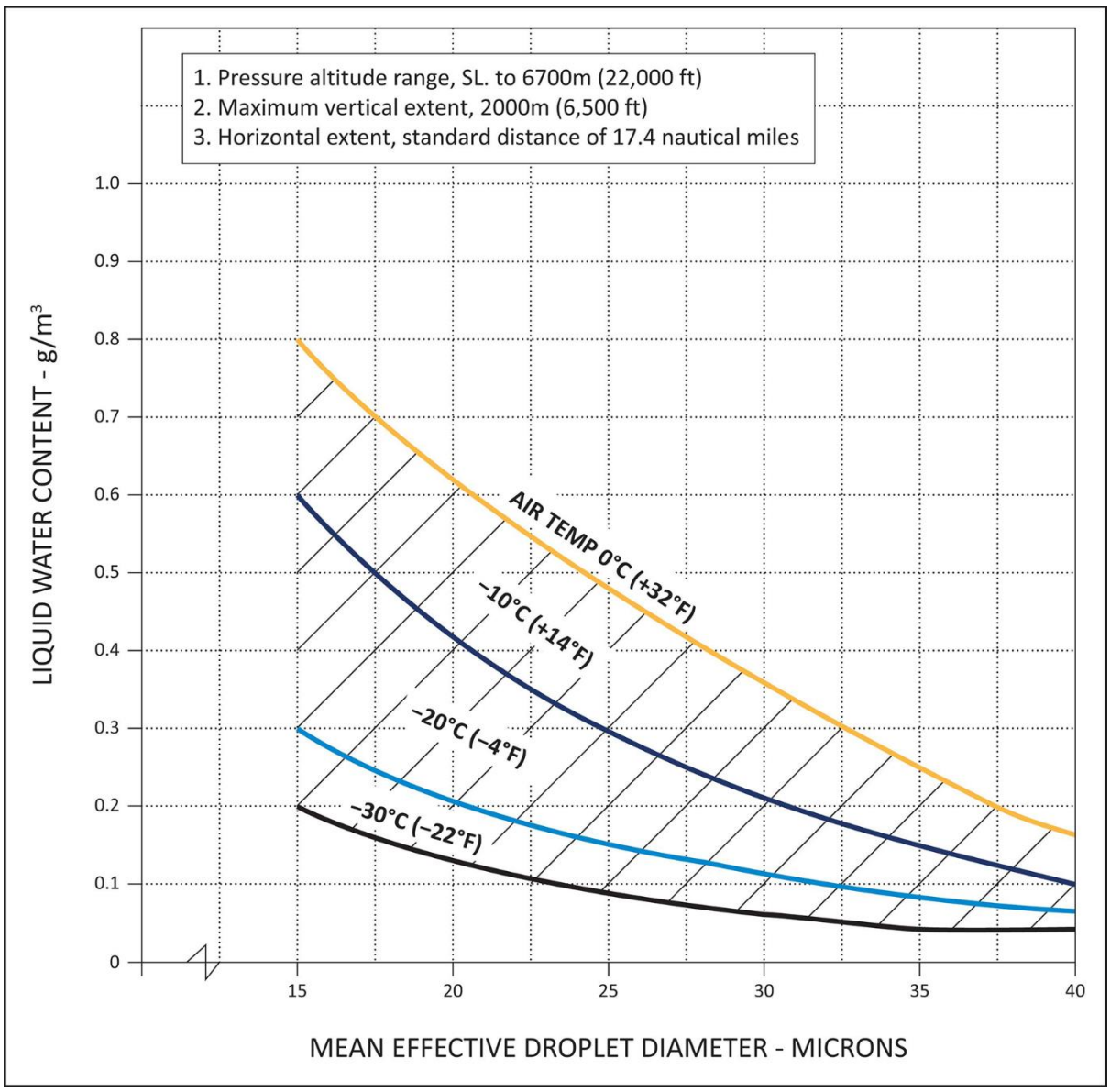

FIGURE 1

CONTINUOUS MAXIMUM (STRATIFORM CLOUDS) ATMOSPHERIC ICING CONDITIONS

LIQUID WATER CONTENT VS MEAN EFFECTIVE DROP DIAMETER

Source of data – NACA TN No. 1855, Class III –M, Continuous Maximum.

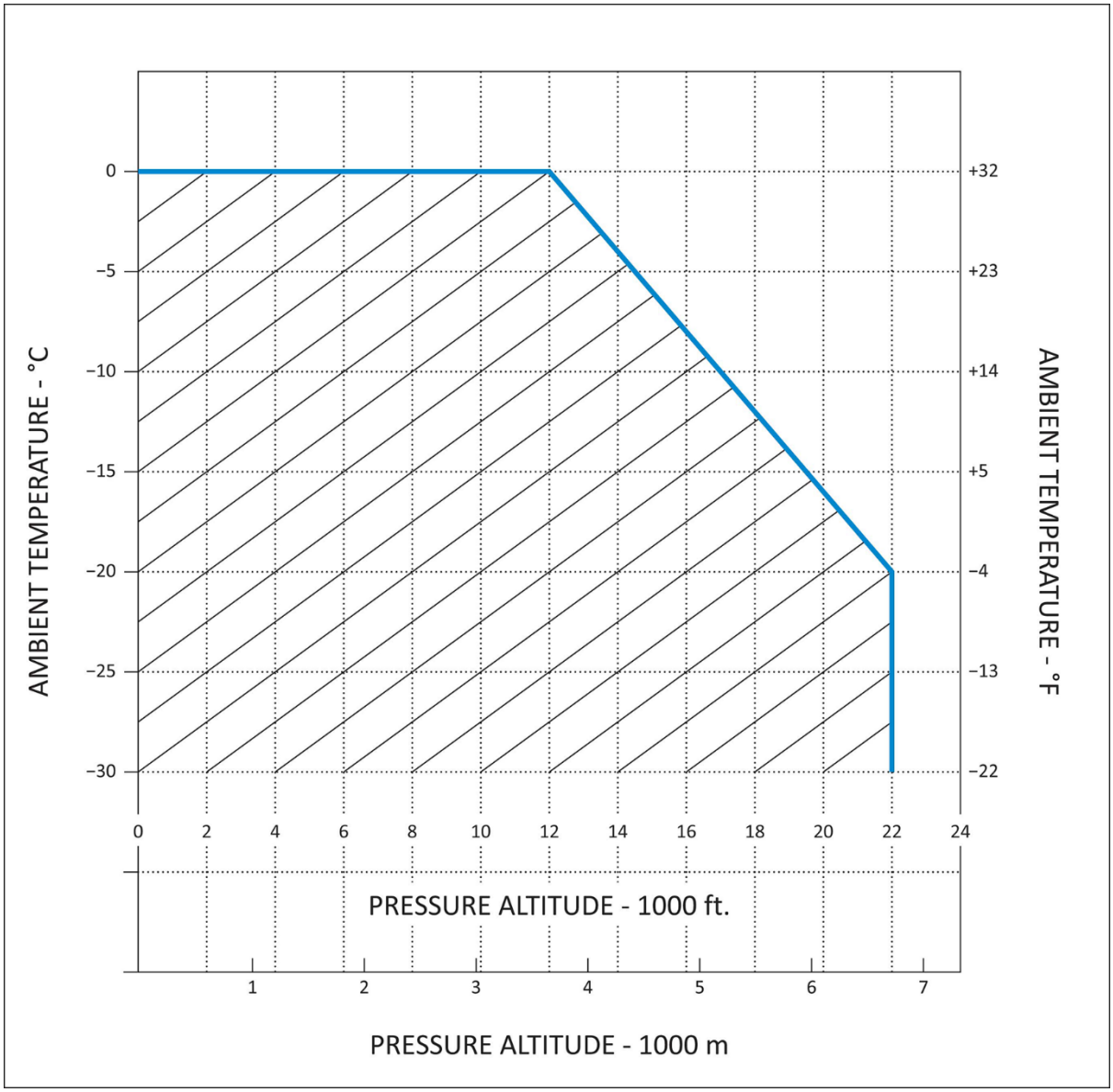

FIGURE 2

CONTINUOUS MAXIMUM (STRATIFORM CLOUDS) ATMOSPHERIC ICING CONDITIONS

AMBIENT TEMPERATURE VS PRESSURE ALTITUDE

Source of data – NACA TN No. 2569.

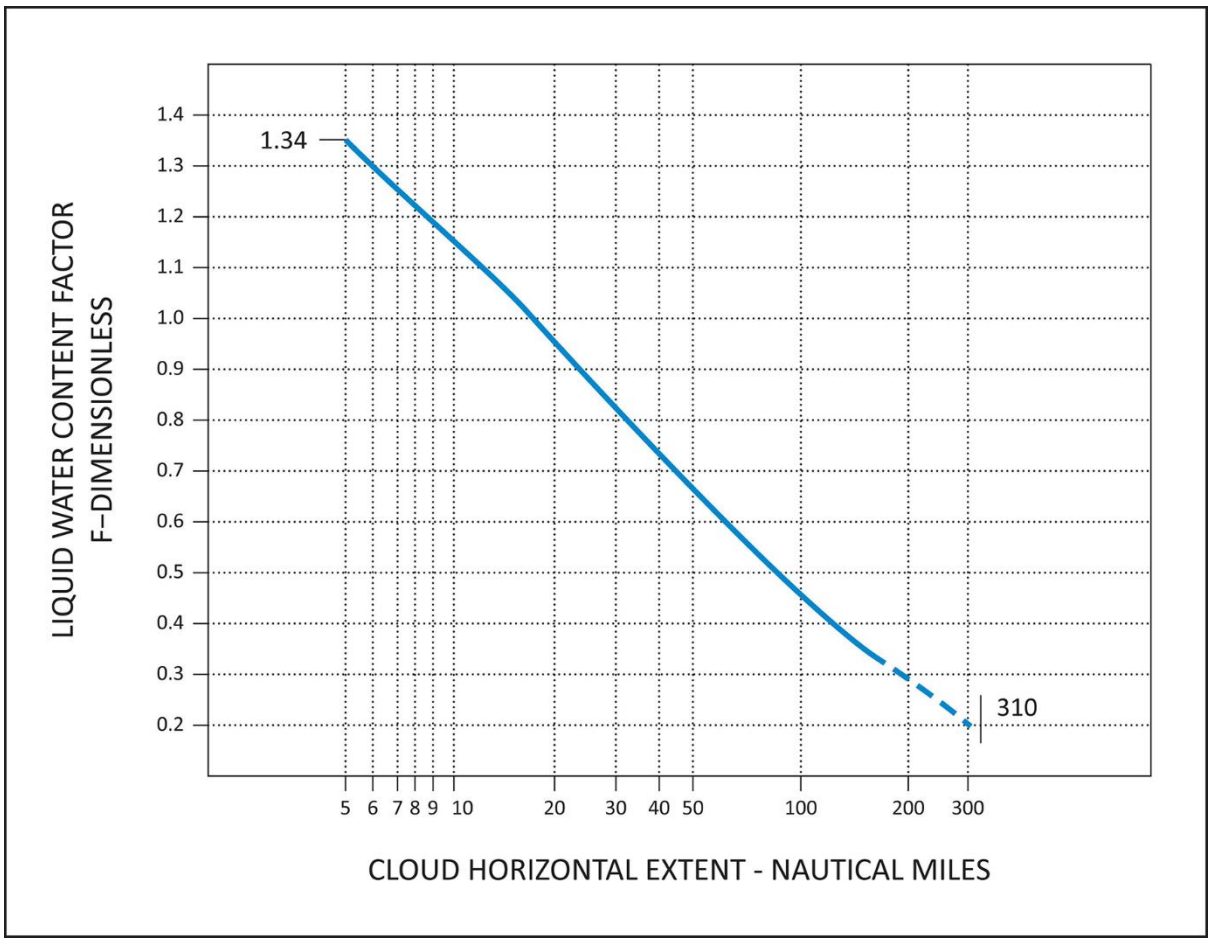

FIGURE 3

CONTINUOUS MAXIMUM (STRATIFORM CLOUDS) ATMOSPHERIC ICING CONDITIONS

LIQUID WATER CONTENT FACTOR VS CLOUD HORIZONTAL DISTANCE

Source of data – NACA TN No. 2738.

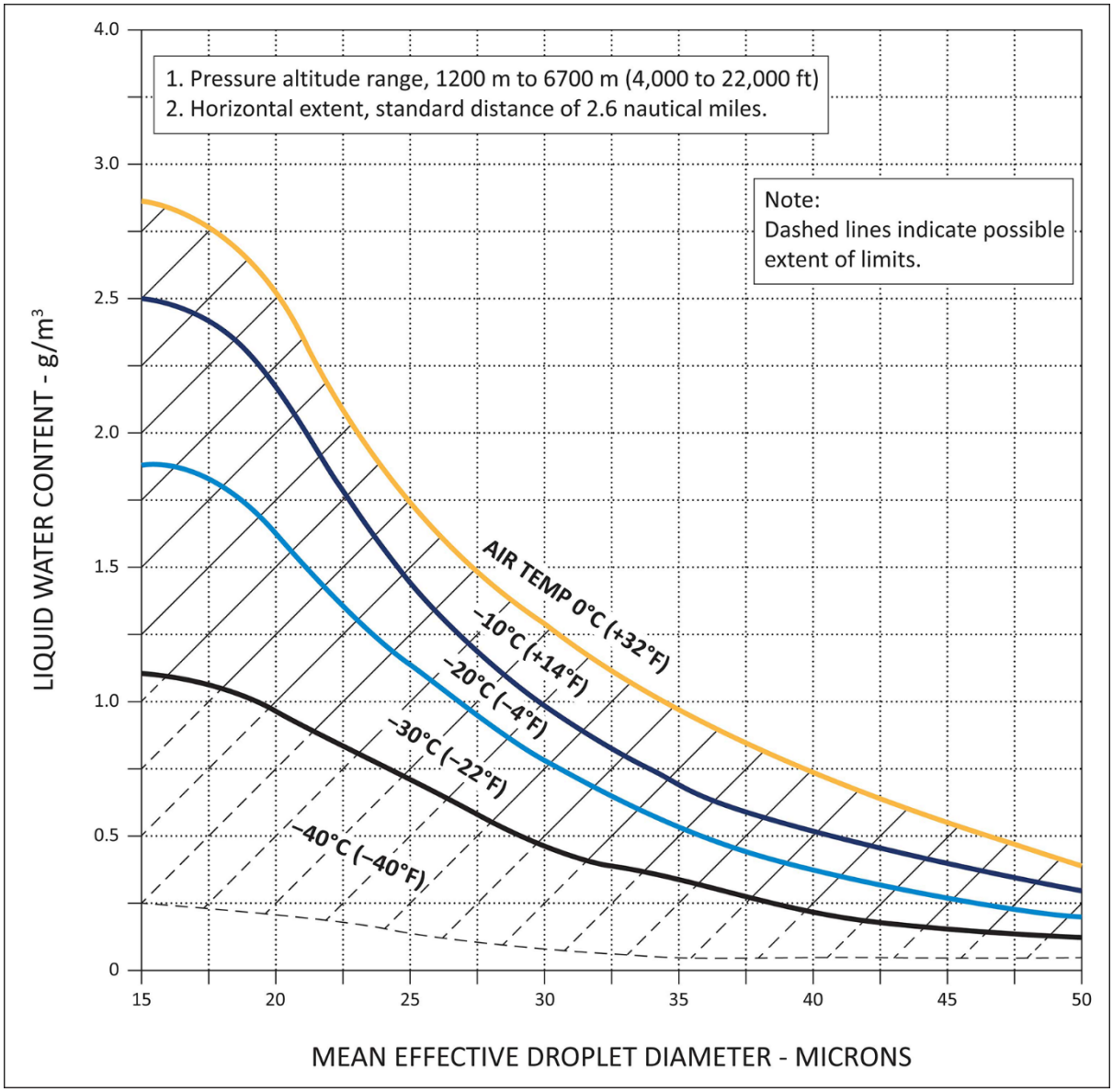

FIGURE 4

INTERMITTENT MAXIMUM (CUMULIFORM CLOUDS) ATMOSPHERIC ICING CONDITIONS

LIQUID WATER CONTENT VS MEAN EFFECTIVE DROP DIAMETER

Source of data – NACA TN No. 1855, Class II – M, Intermittent Maximum

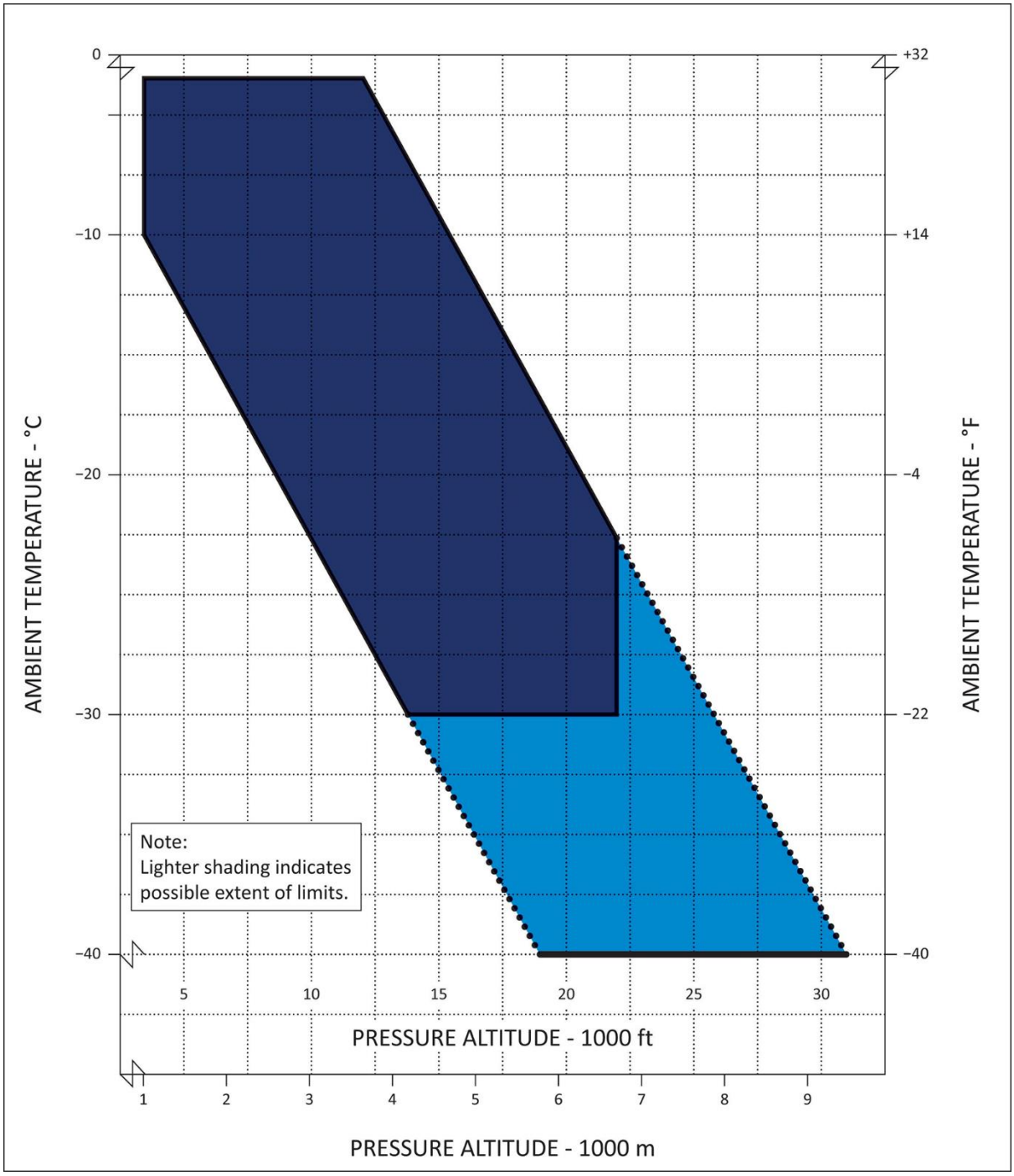

FIGURE 5

INTERMITTENT MAXIMUM (CUMULIFORM CLOUDS) ATMOSPHERIC ICING CONDITIONS

AMBIENT TEMPERATURE VS PRESSURE ALTITUDE

Source of data – NACA TN No. 2569.

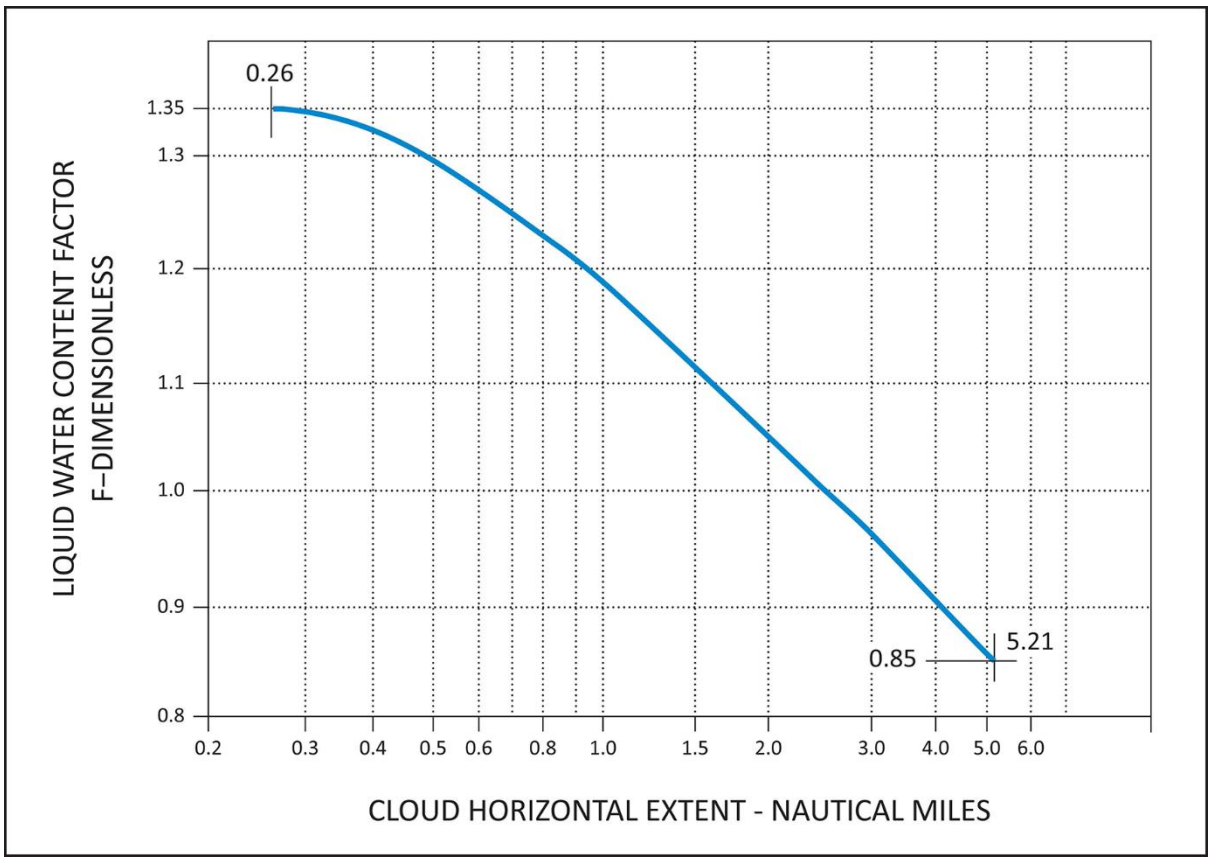

FIGURE 6

INTERMITTENT MAXIMUM (CUMULIFORM CLOUDS) ATMOSPHERIC ICING CONDITIONS

VARIATION OF LIQUID WATER CONTENT FACTOR WITH CLOUD HORIZONTAL EXTENT

Source of data – NACA TN No. 2738.

APPENDIX D

ED Decision 2003/2/RM

Criteria for determining minimum flight crew. The following are considered by the Agency in determining the minimum flight crew under CS 25.1523.

(a) *Basic workload functions.* The following basic workload functions are considered:

(1) Flight path control.

(2) Collision avoidance.

(3) Navigation.

(4) Communications.

(5) Operation and monitoring of aircraft engines and systems.

(6) Command decisions.

(b) *Workload factors.* The following workload factors are considered significant when analysing and demonstrating workload for minimum flight crew determination:

(1) The accessibility, ease and simplicity of operation of all necessary flight, power, and equipment controls, including emergency fuel shutoff valves, electrical controls, electronic controls, pressurisation system controls, and engine controls.

(2) The accessibility and conspicuity of all necessary instruments and failure warning devices such as fire warning, electrical system malfunction, and other failure or caution indicators. The extent to which such instruments or devices direct the proper corrective action is also considered.

(3) The number, urgency, and complexity of operating procedures with particular consideration given to the specific fuel management schedule imposed by centre of gravity, structural or other considerations of an airworthiness nature, and to the ability of each engine to operate at all times from a single tank or source which is automatically replenished if fuel is also stored in other tanks.

(4) The degree and duration of concentrated mental and physical effort involved in normal operation and in diagnosing and coping with malfunctions and emergencies.

(5) The extent of required monitoring of the fuel, hydraulic, pressurisation, electrical, electronic, deicing, and other systems while en route.

(6) The actions requiring a crew member to be unavailable at his assigned duty station, including: observation of systems, emergency operation of any control, and emergencies in any compartment.

(7) The degree of automation provided in the aircraft systems to afford (after failures or malfunctions) automatic crossover or isolation of difficulties to minimise the need for flight crew action to guard against loss of hydraulic or electrical power to flight controls or other essential systems.

(8) The communications and navigation workload.

(9) The possibility of increased workload associated with any emergency that may lead to other emergencies.

(10) Incapacitation of a flight-crew member whenever the applicable operating rule requires a minimum flight crew of at least two pilots.

(c) *Kind of operation authorised.* The determination of the kind of operation authorised requires consideration of the operating rules under which the aeroplane will be operated. Unless an applicant desires approval for a more limited kind of operation, it is assumed that each aeroplane certificated under this CS-25 will operate under IFR conditions.

APPENDIX F

Part I – Test Criteria and Procedures for Showing Compliance with CS 25.853, 25.855 or 25.869

ED Decision 2003/2/RM

(a) *Material test criteria –*

(1) *Interior compartments occupied by crew or passengers.*

(i) Interior ceiling panels, interior wall panels, partitions, galley structure, large cabinet walls, structural flooring, and materials used in the construction of stowage compartments (other than underseat stowage compartments and compartments for stowing small items such as magazines and maps) must be self-extinguishing when tested vertically in accordance with the applicable portions of Part I of this Appendix. The average burn length may not exceed 15 cm (6 inches) and the average flame time after removal of the flame source may not exceed 15 seconds. Drippings from the test specimen may not continue to flame for more than an average of 3 seconds after falling.

(ii) Floor covering, textiles (including draperies and upholstery), seat cushions, padding, decorative and nondecorative coated fabrics, leather, trays and galley furnishings, electrical conduit, thermal and acoustical insulation and insulation covering, air ducting, joint and edge covering, liners of Class B and E cargo or baggage compartments, floor panels of Class B, C, D, or E cargo or baggage compartments, insulation blankets, cargo covers and transparencies, moulded and thermoformed parts, air ducting joints, and trim strips (decorative and chafing), that are constructed of materials not covered in sub-paragraph (iv) below, must be self-extinguishing when tested vertically in accordance with the applicable portions of Part I of this Appendix or other approved equivalent means. The average burn length may not exceed 20 cm (8 inches), and the average flame time after removal of the flame source may not exceed 15 seconds. Drippings from the test specimen may not continue to flame for more than an average of 5 seconds after falling.

(iii) Motion picture film must be safety film meeting the Standard Specifications for Safety Photographic Film PHI.25 (available from the American National Standards Institute, 1430 Broadway, New York, NY 10018). If the film travels through ducts, the ducts must meet the requirements of sub-paragraph (ii) of this paragraph.

(iv) Clear plastic windows and signs, parts constructed in whole or in part of elastomeric materials, edge lighted instrument assemblies consisting of two or more instruments in a common housing, seat belts, shoulder harnesses, and cargo and baggage tiedown equipment, including containers, bins, pallets, etc, used in passenger or crew compartments, may not have an average burn rate greater than 64 mm (2·5 inches) per minute when tested horizontally in accordance with the applicable portions of this Appendix.

(v) Except for small parts (such as knobs, handles, rollers, fasteners, clips, grommets, rub strips, pulleys, and small electrical parts) that would not contribute significantly to the propagation of a fire and for electrical wire and cable insulation, materials in items not specified in paragraphs (a)(1)(i), (ii), (iii), or (iv) of Part I of this Appendix

may not have a burn rate greater than 102 mm/min (4·0 inches per minute) when tested horizontally in accordance with the applicable portions of this Appendix.

(2) *Cargo and baggage compartments not occupied by crew or passengers.*

(i) Thermal and acoustic insulation (including coverings) used in each cargo and baggage compartment must be constructed of materials that meet the requirements set forth in sub-paragraph (a)(1)(ii) of Part I of this Appendix.

(ii) A cargo or baggage compartment defined in CS 25.857, as Class B or E must have a liner constructed of materials that meet the requirements of sub-paragraph (a)(1)(ii) of Part I of this Appendix and separated from the aeroplane structure (except for attachments). In addition, such liners must be subjected to the 45-degree angle test. The flame may not penetrate (pass through) the material during application of the flame or subsequent to its removal. The average flame time after removal of the flame source may not exceed 15 seconds, and the average glow time may not exceed 10 seconds.

(iii) A cargo or baggage compartment defined in CS 25.857 as Class B, C, D, or E must have floor panels constructed of materials which meet the requirements of sub-paragraph (a)(1)(ii) of Part I of this Appendix and which are separated from the aeroplane structure (except for attachments). Such panels must be subjected to the 45-degree angle test. The flame may not penetrate (pass through) the material during application of the flame or subsequent to its removal. The average flame time after removal of the flame source may not exceed 15 seconds, and the average glow time may not exceed 10 seconds.

(iv) Insulation blankets and covers used to protect cargo must be constructed of materials that meet the requirements of sub-paragraph (a)(1)(ii) of Part I of this Appendix. Tiedown equipment (including containers, bins, and pallets) used in each cargo and baggage compartment must be constructed of materials that meet the requirements of sub-paragraph (a)(1)(v) of Part I of this Appendix.

(3) *Electrical system components*. Insulation on electrical wire or cable installed in any area of the fuselage must be selfextinguishing when subjected to the 60 degree test specified in Part I of this Appendix. The average burn length may not exceed 76 mm (3 inches), and the average flame time after removal of the flame source may not exceed 30 seconds. Drippings from the test specimen may not continue to flame for more than an average of 3 seconds after falling.

(b) *Test Procedures* –

(1) *Conditioning*. Specimens must be conditioned to 21·11 ± 3°C (70 ± 5°F) and at 50% ± 5% relative humidity until moisture equilibrium is reached or for 24 hours. Each specimen must remain in the conditioning environment until it is subjected to the flame.

(2) *Specimen configuration.* Except for small parts and electrical wire and cable insulation, materials must be tested either as a section cut from a fabricated part as installed in the aeroplane or as a specimen simulating a cut section, such as a specimen cut from a flat sheet of the material or a model of the fabricated part. The specimen may be cut from any location in a fabricated part; however, fabricated units, such as sandwich panels, may not be separated for test. Except as noted below, the specimen thickness must be no thicker than the minimum thickness to be qualified for use in the aeroplane. Test specimens of thick foam parts, such as seat cushions, must be 13 mm (½-inch) in thickness. Test specimens of materials that must meet the requirements of sub-

paragraph (a)(1)(v) of Part I of this Appendix must be no more than 3·2 mm (⅛-inch) in thickness. Electrical wire and cable specimens must be the same size as used in the aeroplane. In the case of fabrics, both the warp and fill direction of the weave must be tested to determine the most critical flammability condition. Specimens must be mounted in a metal frame so that the two long edges and the upper edge are held securely during the vertical test prescribed in sub-paragraph (4) of this paragraph and the two long edges and the edge away from the flame are held securely during the horizontal test prescribed in sub-paragraph (5) of this paragraph. The exposed area of the specimen must be at least 50 mm (2 inches) wide and 31 cm (12 inches) long, unless the actual size used in the aeroplane is smaller. The edge to which the burner flame is applied must not consist of the finished or protected edge of the specimen but must be representative of the actual cross-section of the material or part as installed in the aeroplane. The specimen must be mounted in a metal frame so that all four edges are held securely and the exposed area of the specimen is at least 20 cm by 20 cm (8 inches by 8 inches) during the 45° test prescribed in sub-paragraph (6) of this paragraph.

(3) *Apparatus*. Except as provided in sub-paragraph (7) of this paragraph, tests must be conducted in a draught-free cabinet in accordance with Federal Test Method Standard 191 Model 5903 (revised Method 5902) for the vertical test, or Method 5906 for horizontal test (av ailable from the General Services Administration, Business Service Centre, Region 3, Seventh & D Streets SW., Washington, DC 20407). Specimens, which are too large for the cabinet, must be tested in similar draught-free conditions.

(4) *Vertical test.* A minimum of three specimens must be tested and results averaged. For fabrics, the direction of weave corresponding to the most critical flammability conditions must be parallel to the longest dimension. Each specimen must be supported vertically. The specimen must be exposed to a Bunsen or Tirril burner with a nominal 9·5 mm (⅜-inch) I.D. tube adjusted to give a flame of 38 mm (1½ inches) in height. The minimum flame temperature measured by a calibrated thermocouple pyrometer in the centre of the flame must be 843°C (1550°F). The lower edge of the specimen must be 19 mm (¾-inch) above the top edge of the burner. The flame must be applied to the centre line of the lower edge of the specimen. For materials covered by sub-paragraph (a)(1)(i) of Part I of this Appendix, the flame must be applied for 60 seconds and then removed. For materials covered by sub-paragraph (a)(1)(ii) of Part I of this Appendix, the flame must be applied for 12 seconds and then removed. Flame time, burn length, and flaming time of drippings, if any, may be recorded. The burn length determined in accordance with subparagraph (7) of this paragraph must be measured to the nearest 2·5 mm (tenth of an inch).

(5) *Horizontal test.* A minimum of three specimens must be tested and the results averaged. Each specimen must be supported horizontally. The exposed surface, when installed in the aircraft, must be face down for the test. The specimen must be exposed to a Bunsen or Tirrill burner with a nominal 9·5 mm (⅜-inch) I.D. tube adjusted to give a flame of 38 mm (1½ inches) in height. The minimum flame temperature measured by a calibrated thermocouple pyrometer in the centre of the flame must be 843°C (1550°F). The specimen must be positioned so that the edge being tested is centred 19 mm (¾-inch) above the top of the burner. The flame must be applied for 15 seconds and then removed. A minimum of 25 cm (10 inches) of specimen must be used for timing purposes, approximately 38 mm (1½ inches) must burn before the burning front reaches the timing zone, and the average burn rate must be recorded.

(6) *Forty-five degree test.* A minimum of three specimens must be tested and the results averaged. The specimens must be supported at an angle of 45° to a horizontal surface. The exposed surface when installed in the aircraft must be face down for the test. The specimens must be exposed to a Bunsen or Tirrill burner with a nominal ⅜-inch (9·5 mm) I.D. tube adjusted to give a flame of 38 mm (1½ inches) in height. The minimum flame temperature measured by a calibrated thermocouple pyrometer in the centre of the flame must be 843°C (1550°F). Suitable precautions must be taken to avoid draughts. The flame must be applied for 30 seconds with one-third contacting the material at the centre of the specimen and then removed. Flame time, glow time, and whether the flame penetrates (passes through) the specimen must be recorded.

(7) *Sixty-degree test.* A minimum of three specimens of each wire specification (make and size) must be tested. The specimen of wire or cable (including insulation) must be placed at an angle of 60° with the horizontal in the cabinet specified in sub-paragraph (3) of this paragraph with the cabinet door open during the test, or must be placed within a chamber approximately 61 cm (2 feet) high by 31 cm by 31 cm (1 foot by 1 foot), open at the top and at one vertical side (front), and which allows sufficient flow of air for complete combustion, but which is free from draughts. The specimen must be parallel to and approximately 15 cm (6 inches) from the front of the chamber. The lower end of the specimen must be held rigidly clamped. The upper end of the specimen must pass over a pulley or rod and must have an appropriate weight attached to it so that the specimen is held tautly throughout the flammability test. The test specimen span between lower clamp and upper pulley or rod must be 61 cm (24 inches) and must be marked 20 cm (8 inches) from the lower end to indicate the central point for flame application. A flame from a Bunsen or Tirrill burner must be applied for 30 seconds at the test mark. The burner must be mounted underneath the test mark on the specimen, perpendicular to the specimen and at an angle of 30° to the vertical plane of the specimen. The burner must have a nominal bore of 9·5 mm (⅜-inch) and be adjusted to provide a 76 mm (3-inch) high flame with an inner cone approximately one-third of the flame height. The minimum temperature of the hottest portion of the flame, as measured with a calibrated thermocouple pyrometer, may not be less than 954°C (1750°F). The burner must be positioned so that the hottest portion of the flame is applied to the test mark on the wire. Flame time, burn length, and flaming time of drippings, if any, must be recorded. The burn length determined in accordance with sub-paragraph (8) of this paragraph must be measured to the nearest 2·5 mm (tenth of an inch). Breaking of the wire specimens is not considered a failure.

(8) *Burn length.* Burn length is the distance from the original edge to the farthest evidence of damage to the test specimen due to flame impingement, including areas of partial or complete consumption, charring, or embrittlement, but not including areas sooted, stained, warped, or discoloured, nor areas where material has shrunk or melted away from the heat source.

Part II – Flammability of Seat Cushions

ED Decision 2006/005/R

(a) *Criteria for Acceptance*. Each seat cushion must meet the following criteria:

(1) At least three sets of seat bottom and seat back cushion specimens must be tested.

(2) If the cushion is constructed with a fire blocking material, the fire blocking material must completely enclose the cushion foam core material.

(3) Each specimen tested must be fabricated using the principal components (i.e. foam core, flotation material, fire blocking material, if used, and dress covering) and assembly processes (representative seams and closures) intended for use in the production articles. If a different material combination is used for the back cushion than for the bottom cushion, both material combinations must be tested as complete specimen sets, each set consisting of a back cushion specimen and a bottom cushion specimen. If a cushion, including outer dress covering, is demonstrated to meet the requirements of this Appendix using the oil burner test, the dress covering of that cushion may be replaced with a similar dress covering provided the burn length of the replacement covering, as determined by the test specified in CS 25.853(c), does not exceed the corresponding burn length of the dress covering used on the cushion subjected to the oil burner test.

(4) For at least two-thirds of the total number of specimen sets tested, the burn length from the burner must not reach the side of the cushion opposite the burner. The burn length must not exceed 43 cm (17 inches). Burn length is the perpendicular distance from the inside edge of the seat frame closest to the burner to the farthest evidence of damage to the test specimen due to flame impingement, including areas of partial or complete consumption, charring, or embrittlement, but not including areas sooted, stained, warped, or discoloured, or areas where material has shrunk or melted away from the heat source.

(5) The average percentage weight loss must not exceed 10 percent. Also, at least twothirds of the total number of specimen sets tested must not exceed 10 percent weight loss. All droppings falling from the cushions and mounting stand are to be discarded before the after-test weight is determined. The percentage weight loss for a specimen set is the weight of the specimen set before testing less the weight of the specimen set after testing expressed as the percentage of the weight before testing.

(b) *Test Conditions.* Vertical air velocity should average 13cm/s ± 5 cm/s (25 fpm ± 10 fpm) at the top of the back seat cushion. Horizontal air velocity should be below 51 mm/s (10 fpm) just above the bottom seat cushion. Air velocities should be measured with the ventilation hood operating and the burner motor off.

(c) *Test Specimens*

(1) For each test, one set of cushion specimens representing a seat bottom and seat back cushion must be used.

(2) The seat bottom cushion specimen must be 457 ± 3 mm (18 ± 0·125 inches) wide by 508 ± 3 mm (20 ± 0·125 inches) deep by 102 ± 3 mm (4 ± 0·125 inches) thick, exclusive of fabric closures and seam overlap.

(3) The seat back cushion specimen must be 457 ± 3 mm (18 ± 0·125 inches) wide by 635 ± 3 mm (25 ± 0·125 inches) high by 51 ± 3 mm (2 ± 0·125 inches) thick, exclusive of fabric closures and seam overlap.

(4) The specimens must be conditioned at 21 ± 2°C (70 ± 5°F) 55% ± 10% relative humidity for at least 24 hours before testing.

(d) *Test Apparatus.* The arrangement of the test apparatus is shown in Figure 1 through 5 and must include the components described in this paragraph. Minor details of the apparatus may vary, depending on the model burner used.

(1) *Specimen Mounting Stand.* The mounting stand for the test specimens consists of steel angles, as shown in Figure 1. The length of the mounting stand legs is 305 ± 3mm (12 ± 0·125 inches). The mounting stand must be used for mounting the test specimen seat bottom and seat back, as shown in Figure 2. The mounting stand should also include a suitable drip pan lined with aluminium foil, dull side up.

(2) *Test Burner.* The burner to be used in testing must –

(i) Be a modified gun type;

(ii) Have an 80-degree spray angle nozzle nominally rated for 8.5 l/hr (2·25 US gallons/hour) at 690 KPa (100 psi);

(iii) Have a 31 cm (12-inch) burner cone installed at the end of the draft tube, with an opening 15 cm (6 inches) high and 28 cm (11 inches) wide, as shown in Figure 3; and

(iv) Have a burner fuel pressure regulator that is adjusted to deliver a nominal 7.6 l/hr (2·0 US gallon/hour) of # 2 Grade kerosene or equivalent required for the test.

(3) Calorimeter

(i) The calorimeter to be used in testing must be a 0–17·0 Watts/cm^2 (0– 15·0 BTU per ft^2 sec) calorimeter, accurate ± 3%, mounted in a 15 by 31 cm (6-inch by 12-inch) by 19 mm (0·75 inch) thick calcium silicate insulating board which is attached to a steel angle bracket for placement in the test stand during burner calibration, as shown in Figure 4.

(ii) Because crumbling of the insulating board with service can result in misalignment of the calorimeter, the calorimeter must be monitored and the mounting shimmed, as necessary, to ensure that the calorimeter face is flush with the exposed plane of the insulating board in a plane parallel to the exit of the test burner cone.

(4) *Thermocouples.* The seven thermocouples to be used for testing must be 1.59 to 3.18 mm (0·0625 to 0·125 inch) metal sheathed, ceramic packed, type K, grounded thermocouples with a nominal 22 to 30 American wire gauge (AWG)-size conductor 0·643 mm (0·0253 inches) to 0·254 mm (0·010 inches) diameter. The seven thermocouples must be attached to a steel angle bracket to form a thermocouple rake for placement in the test stand during burner calibration as shown in Figure 5.

(5) *Apparatus Arrangement*. The test burner must be mounted on a suitable stand to position the exit of the burner cone a distance of 102 ± 3 mm (4 ± 0·125 inches) from one side of the specimen mounting stand. The burner stand should have the capability of allowing the burner to be swung away from the specimen-mounting stand during warm-up periods.

(6) *Data Recording.* A recording potentiometer or other suitable calibrated instrument with an appropriate range must be used to measure and record the outputs of the calorimeter and the thermocouples.

(7) *Weight Scale.* Weighing Device – A device must be used that with proper procedures may determine the before and after test weights of each set of seat cushion specimens within 9 grams (0·02 pound). A continuous weighing system is preferred.

(8) *Timing Device.* A stopwatch or other device (calibrated to ± 1 second) must be used to measure the time of application of the burner flame and self-extinguishing time or test duration.

(e) *Preparation of Apparatus.* Before calibration, all equipment must be turned on and the burner fuel must be adjusted as specified in sub-paragraph (d)(2).

(f) *Calibration.* To ensure the proper thermal output of the burner, the following test must be made:

(1) Place the calorimeter on the test stand as shown in Figure 4 at a distance of 102-±3 mm (4 ± 0·125 inches) from the exit of the burner cone.

(2) Turn on the burner, allow it to run for 2 minutes for warm-up, and adjust the burner air intake damper to produce a reading of 11·9 ± 0·6 Watts/cm^2 (10·5 ± 0·5 BTU per ft^2 sec) on the calorimeter to ensure steady state conditions have been achieved. Turn off the burner.

(3) Replace the calorimeter with the thermocouple rake (Figure 5).

(4) Turn on the burner and ensure that the thermocouples are reading 1038 ± 38°C (1900 ± 100°F) to ensure steady state conditions have been achieved.

(5) If the calorimeter and thermocouples do not read within range, repeat steps in sub-paragraphs 1 to 4 and adjust the burner air intake damper until the proper readings are obtained. The thermocouple rake and the calorimeter should be used frequently to maintain and record calibrated test parameters. Until the specific apparatus has demonstrated consistency, each test should be calibrated. After consistency has been confirmed, several tests may be conducted with the pre-test calibration before and a calibration check after the series.

(g) *Test Procedures.* The flammability of each set of specimens must be tested as follows:

(1) Record the weight of each set of seat bottom and seat back cushion specimens to be tested to the nearest 9 grams (0·02 pound).

(2) Mount the seat bottom and seat back cushion test specimens on the test stand as shown in Figure 2, securing the seat back cushion specimen to the test stand at the top.

(3) Swing the burner into position and ensure that the distance from the exit of the burner cone to the side of the seat bottom cushion specimen is 102 ± 3 mm (4 ± 0·125 inches).

(4) Swing the burner away from the test position. Turn on the burner and allow it to run for 2 minutes to provide adequate warm-up of the burner cone and flame stabilization.

(5) To begin the test, swing the burner into the test position and simultaneously start the timing device.

(6) Expose the seat bottom cushion specimen to the burner flame for 2 minutes and then turn off the burner. Immediately swing the burner away from the test position. Terminate test 7 minutes after initiating cushion exposure to the flame by use of a gaseous extinguishing agent (i.e. Halon or CO_2).

(7) Determine the weight of the remains of the seat cushion specimen set left on the mounting stand to the nearest 9 grams (0·02 pound) excluding all droppings.

(h) *Test Report* With respect to all specimen sets tested for a particular seat cushion for which testing of compliance is performed, the following information must be recorded:

(1) An identification and description of the specimens being tested.

(2) The number of specimen sets tested.

(3) The initial weight and residual weight of each set, the calculated percentage weight loss of each set, and the calculated average percentage weight loss for the total number of sets tested.

(4) The burn length for each set tested.

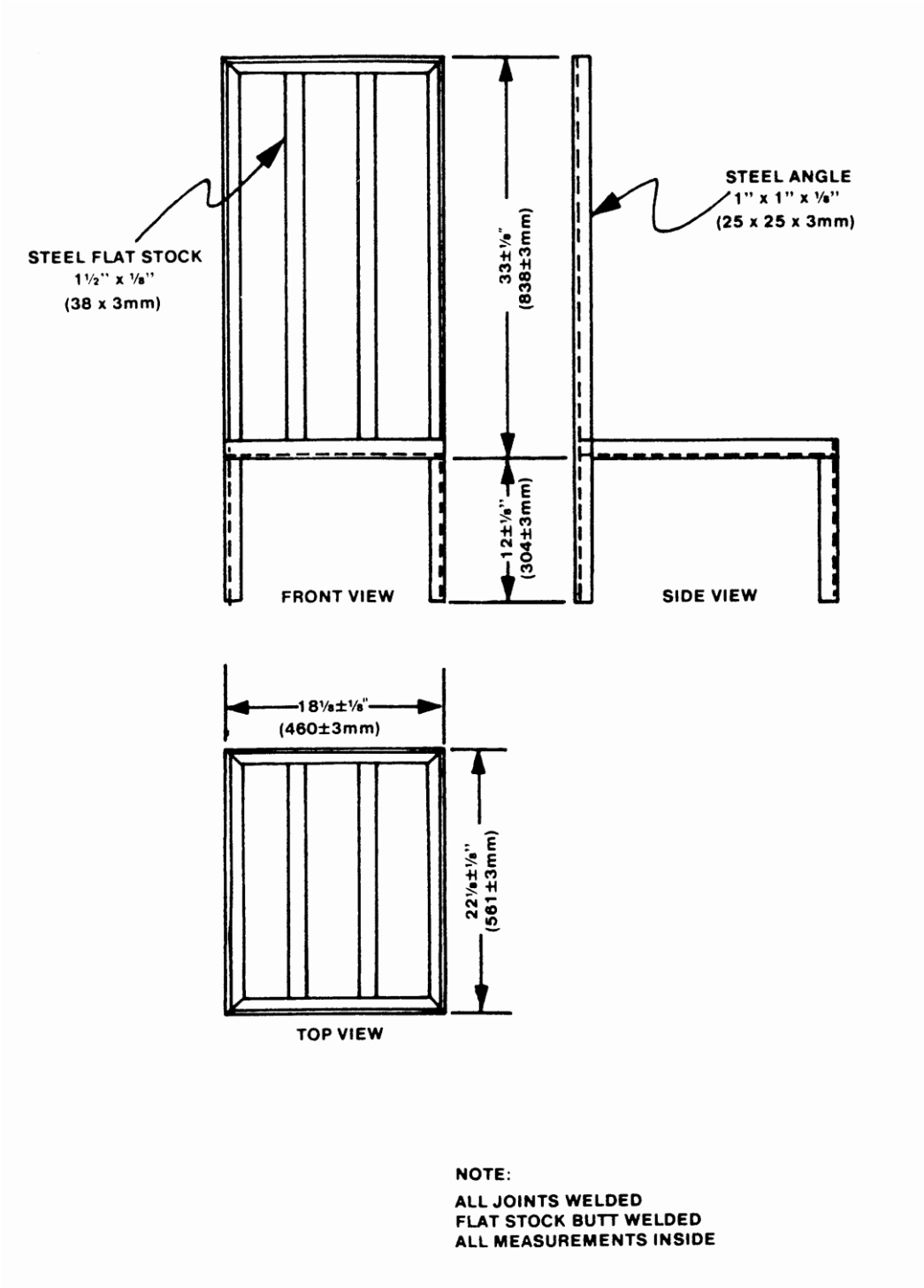
STEEL FLAT STOCK
1½" x ⅛"
(38 x 3mm)
STEEL ANGLE
1" x 1" x ⅛"
(25 x 25 x 3mm)
33±⅛"
(838±3mm)
12±⅛"
(304±3mm)
FRONT VIEW
SIDE VIEW
18⅛±⅛"
(460±3mm)
22⅛±⅛"
(561±3mm)
TOP VIEW
NOTE:
ALL JOINTS WELDED
FLAT STOCK BUTT WELDED
ALL MEASUREMENTS INSIDE

FIGURE 1

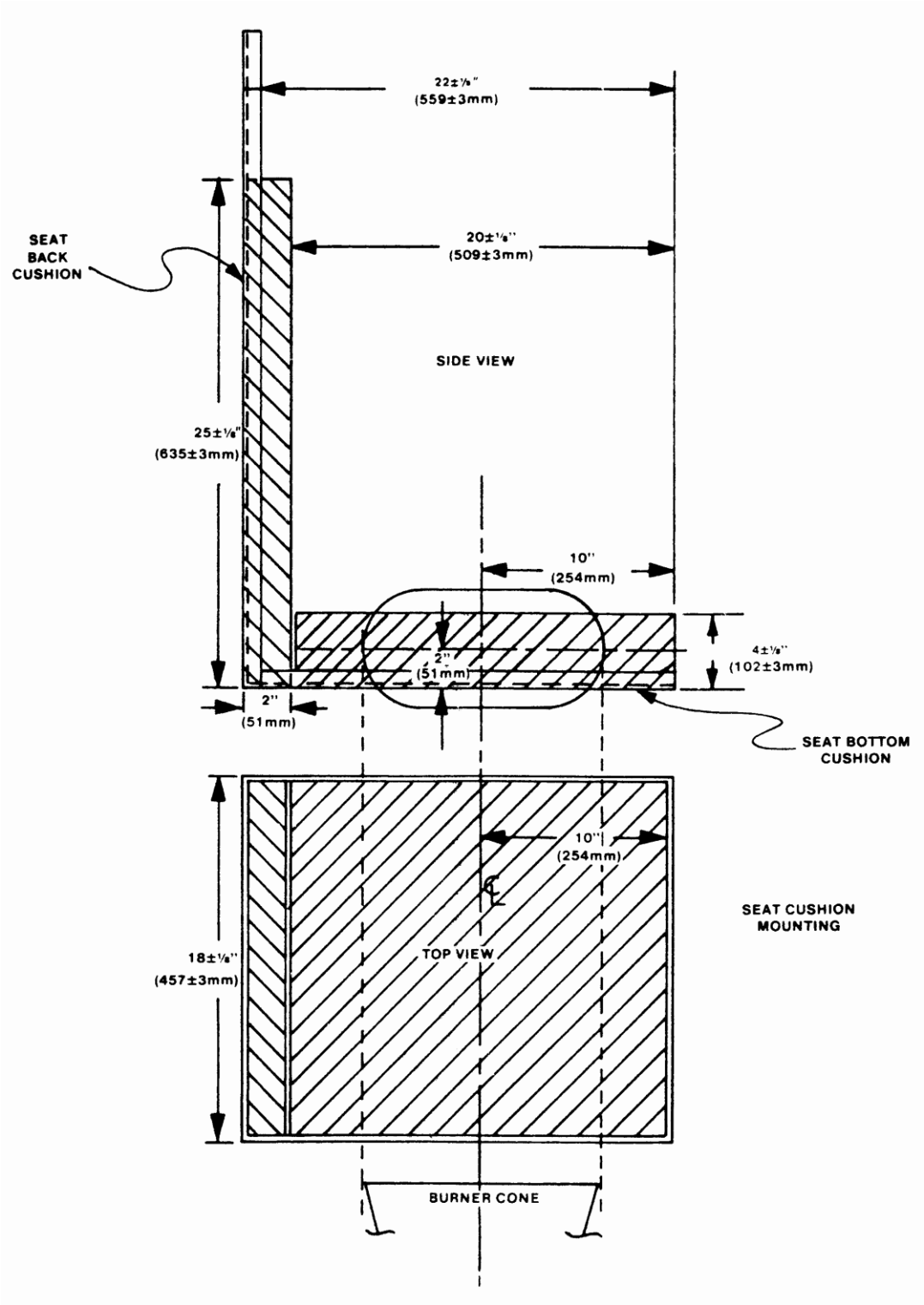
22±⅛"
(559±3mm)
SEAT
BACK
CUSHION
20±⅛"
(509±3mm)
SIDE VIEW
25±⅛"
(635±3mm)
10"
(254mm)
2"
(51mm)
4±⅛"
(102±3mm)
2"
(51mm)
SEAT BOTTOM
CUSHION
10"
(254mm)
SEAT CUSHION
MOUNTING
18±⅛"
(457±3mm)
TOP VIEW
BURNER CONE

FIGURE 2

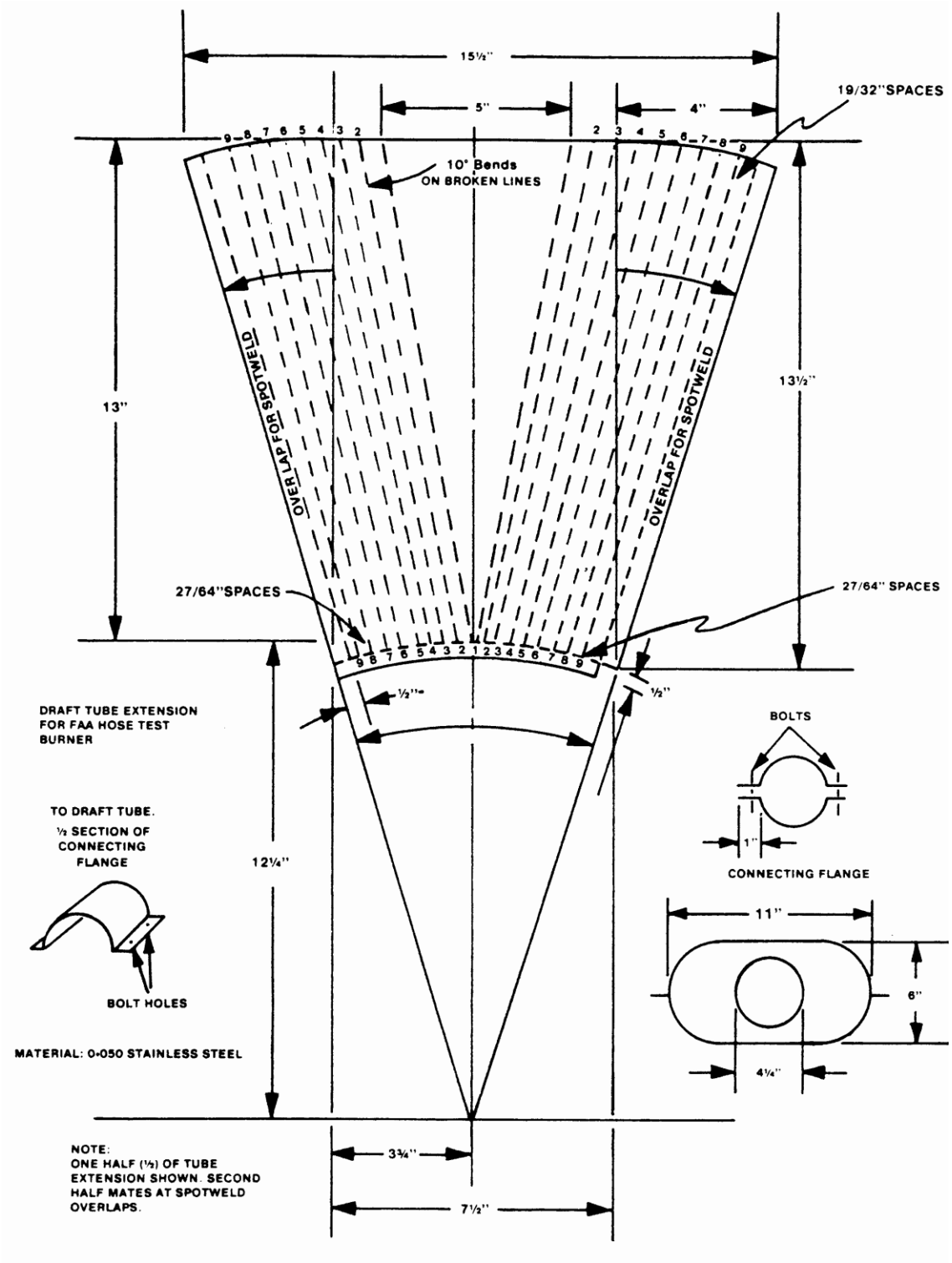
15½"
5"
4"
19/32"SPACES
10° Bends
ON BROKEN LINES
13"
13½"
OVER LAP FOR SPOTWELD
OVERLAP FOR SPOTWELD
27/64"SPACES
27/64" SPACES
½"
½"
DRAFT TUBE EXTENSION
FOR FAA HOSE TEST
BURNER
TO DRAFT TUBE.
½ SECTION OF
CONNECTING
FLANGE
BOLT HOLES
MATERIAL: 0·050 STAINLESS STEEL
12¼"
BOLTS
1"
CONNECTING FLANGE
11"
6"
4¼"
NOTE:
ONE HALF (½) OF TUBE
EXTENSION SHOWN. SECOND
HALF MATES AT SPOTWELD
OVERLAPS.
3¾"
7½"

FIGURE 3

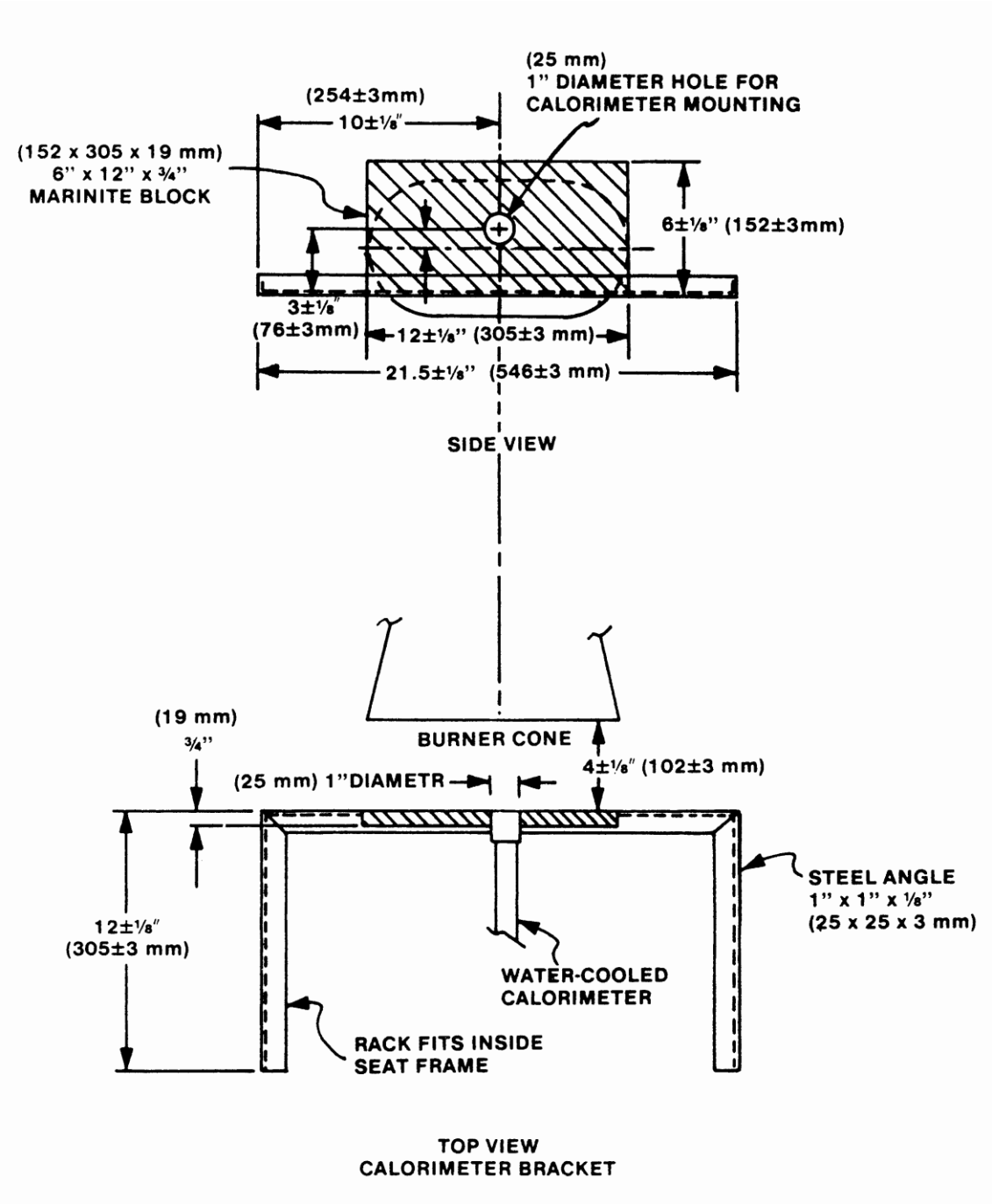
(25 mm)
1" DIAMETER HOLE FOR
CALORIMETER MOUNTING
(254±3mm)
10±⅛"
(152 x 305 x 19 mm)
6" x 12" x ¾"
MARINITE BLOCK
6±⅛" (152±3mm)
3±⅛"
(76±3mm)
12±⅛" (305±3 mm)
21.5±⅛" (546±3 mm)
SIDE VIEW
BURNER CONE
(19 mm)
¾"
(25 mm) 1"DIAMETR
4±⅛" (102±3 mm)
STEEL ANGLE
1" x 1" x ⅛"
(25 x 25 x 3 mm)
12±⅛"
(305±3 mm)
WATER-COOLED
CALORIMETER
RACK FITS INSIDE
SEAT FRAME
TOP VIEW
CALORIMETER BRACKET

FIGURE 4

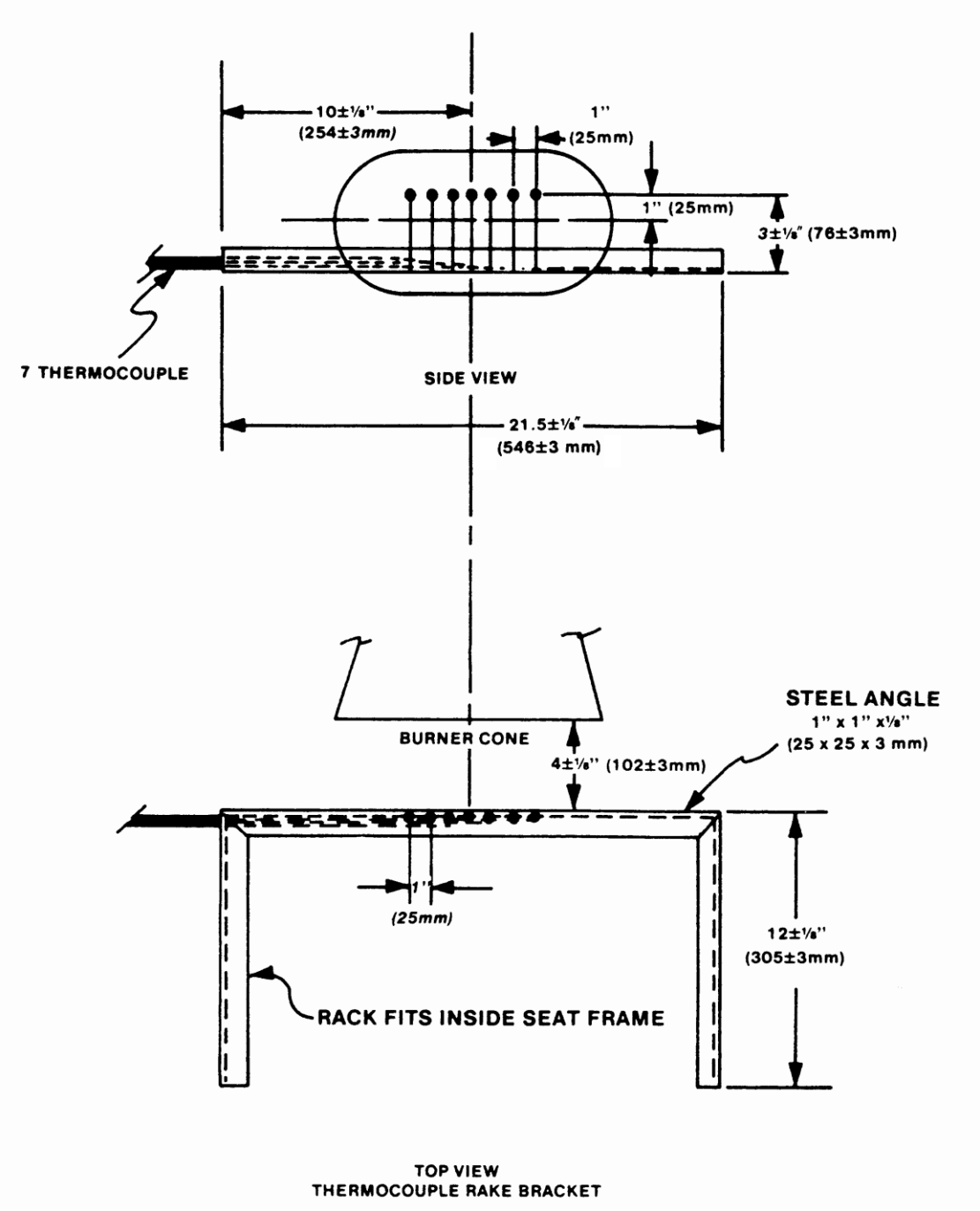

FIGURE 5

[Amdt 25/2]

Part III – Test Method to Determine Flame Penetration Resistance of Cargo Compartment Liners

ED Decision 2003/2/RM

(a) *Criteria for Acceptance*

(1) At least three specimens of cargo compartment sidewall or ceiling liner panels must be tested.

(2) Each specimen tested must simulate the cargo compartment sidewall or ceiling liner panel, including any design features, such as joints, lamp assemblies, etc., the failure of which would affect the capability of the liner to safely contain a fire.

(3) There must be no flame penetration of any specimen within 5 minutes after application of the flame source, and the peak temperature measured at 10 cm (4 inches) above the upper surface of the horizontal test sample must not exceed 204°C (400°F).

(b) *Summary of Method.* This method provides a laboratory test procedure for measuring the capability of cargo compartment lining materials to resist flame penetration within a 7.6 l/hr (2 US gallons/hour) # 2 Grade kerosene or equivalent burner fire source. Ceiling and sidewall liner panels may be tested individually provided a baffle is used to simulate the missing panel. Any specimen that passes the test as a ceiling liner panel may be used as a sidewall liner panel.

(c) *Test Specimens*

(1) The specimen to be tested must measure 406 ± 3 mm (16 ± 0·125 inches) by 610 ± 3 mm (24 ± 0·125 inches).

(2) The specimens must be conditioned at 70°F ± 5°F (21°C ± 2°C) and 55% ± 5% humidity for at least 24 hours before testing.

(d) *Test Apparatus*. The arrangement of the test apparatus, which is shown in Figure 3 of Part II and Figures 1 through 3 of this Part of Appendix F, must include the components described in this paragraph. Minor details of the apparatus may vary, depending on the model of the burner used.

(1) *Specimen Mounting Stand.* The mounting stand for the test specimens consists of steel angles as shown in Figure 1.

(2) *Test Burner.* The burner to be used in testing must –

(i) Be a modified gun type.

(ii) Use a suitable nozzle and maintain fuel pressure to yield a 7.6 l/hr (2 US gallons/hour) fuel flow. For example: an 80-degree nozzle nominally rated at 8.5 l/hr (2·25 US gallons/hour) and operated at 586 Kpa (85 pounds per square inch) gauge to deliver 7.7 l/hr (2·03 US gallons/hour).

(iii) Have a 31 cm (12 inch) burner extension installed at the end of the draft tube with an opening 15 cm (6 inches) high and 28 cm (11 inches) wide as shown in Figure 3 of Part II of this Appendix.

(iv) Have a burner fuel pressure regulator that is adjusted to deliver a nominal 7.6 l/hr (2·0 US gallons/hour) of # 2 Grade kerosene or equivalent.

(3) Calorimeter

(i) The calorimeter to be used in testing must be a total heat flux Foil Type Gardon Gauge of an appropriate range, approximately 0–17·0 Watts/cm2 (0 to 15·0 BTU

per ft2 sec). The calorimeter must be mounted in a 15 by 31 cm (6 inch by 12 inch) by 19 mm (0·75 of an inch) thick insulating block which is attached to a steel angle bracket for placement in the test stand during burner calibration as shown in Figure 2 of this Part of this Appendix.

(ii) The insulating block must be monitored for deterioration and the mounting shimmed as necessary to ensure that the calorimeter face is parallel to the exit plane of the test burner cone.

(4) *Thermocouples.* The seven thermocouples to be used for testing must be 1.59 mm (0·0625 of an inch) ceramic sheathed, type K, grounded thermocouples with a nominal 30 American wire gauge (AWG)-size conductor 0·254 mm (0·010 inches) diameter). The seven thermocouples must be attached to a steel angle bracket to form a thermocouple rake for placement in the stand during burner calibration as shown in Figure 3 of this Part of this Appendix.

(5) *Apparatus Arrangement.* The test burner must be mounted on a suitable stand to position the exit of the burner cone a distance of 20 cm (8 inches) from the ceiling liner panel and 50 mm (2 inches) from the sidewall liner panel. The burner stand should have the capability of allowing the burner to be swung away from the test specimen during warm-up periods.

(6) *Instrumentation*. A recording potentiometer or other suitable instrument with an appropriate range must be used to measure and record the outputs of the calorimeter and the thermocouples.

(7) *Timing Device.* A stopwatch or other device must be used to measure the time of flame application and the time of flame penetration, if it occurs.

(e) *Preparation of Apparatus.* Before calibration, all equipment must be turned on and allowed to stabilize, and the burner fuel flow must be adjusted as specified in sub-paragraph (d)(2).

(f) *Calibration.* To ensure the proper thermal output of the burner the following test must be made:

(1) Remove the burner extension from the end of the draft tube. Turn on the blower portion of the burner without turning the fuel or igniters on. Measure the air velocity using a hot wire anemometer in the centre of the draft tube across the face of the opening. Adjust the damper such that the air velocity is in the range of 7.9 m/s to 9.1 m/s (1550 to 1800 ft/min). If tabs are being used at the exit of the draft tube, they must be removed prior to this measurement. Reinstall the draft tube extension cone.

(2) Place the calorimeter on the test stand as shown in Figure 2 at a distance of 20 cm (8 inches) from the exit of the burner cone to simulate the position of the horizontal test specimen.

(3) Turn on the burner, allow it to run for 2 minutes for warm-up, and adjust the damper to produce a calorimeter reading of 9·1 ± 0·6 Watts/cm^2 (8·0 ± 0·5 BTU per ft^2 sec).

(4) Replace the calorimeter with the thermocouple rake (see Figure 3).

(5) Turn on the burner and ensure that each of the seven thermocouples reads 927°C ± 38°C (1700°F ± 100°F) to ensure steady state conditions have been achieved. If the temperature is out of this range, repeat steps 2 through 5 until proper readings are obtained.

(6) Turn off the burner and remove the thermocouple rake.

(7) Repeat (f)(1) to ensure that the burner is in the correct range.

(g) *Test Procedure*

(1) Mount a thermocouple of the same type as that used for calibration at a distance of 10 cm (4 inches) above the horizontal (ceiling) test specimen. The thermocouple should be centred over the burner cone.

(2) Mount the test specimen on the test stand shown in Figure 1 in either the horizontal or vertical position. Mount the insulating material in the other position.

(3) Position the burner so that flames will not impinge on the specimen, turn the burner on, and allow it to run for 2 minutes. Rotate the burner to apply the flame to the specimen and simultaneously start the timing device.

(4) Expose the test specimen to the flame for 5 minutes and then turn off the burner. The test may be terminated earlier if flame penetration is observed.

(5) When testing ceiling liner panels, record the peak temperature measured 101 mm (4 inches) above the sample.

(6) Record the time at which flame penetration occurs if applicable.

(h) *Test Report.* The test report must include the following:

(1) A complete description of the materials tested including type, manufacturer, thickness, and other appropriate data.

(2) Observations of the behaviour of the test specimens during flame exposure such as delamination, resin ignition, smoke, etc., including the time of such occurrence.

(3) The time at which flame penetration occurs, if applicable, for each of three specimens tested.

(4) Panel orientation (ceiling or sidewall).

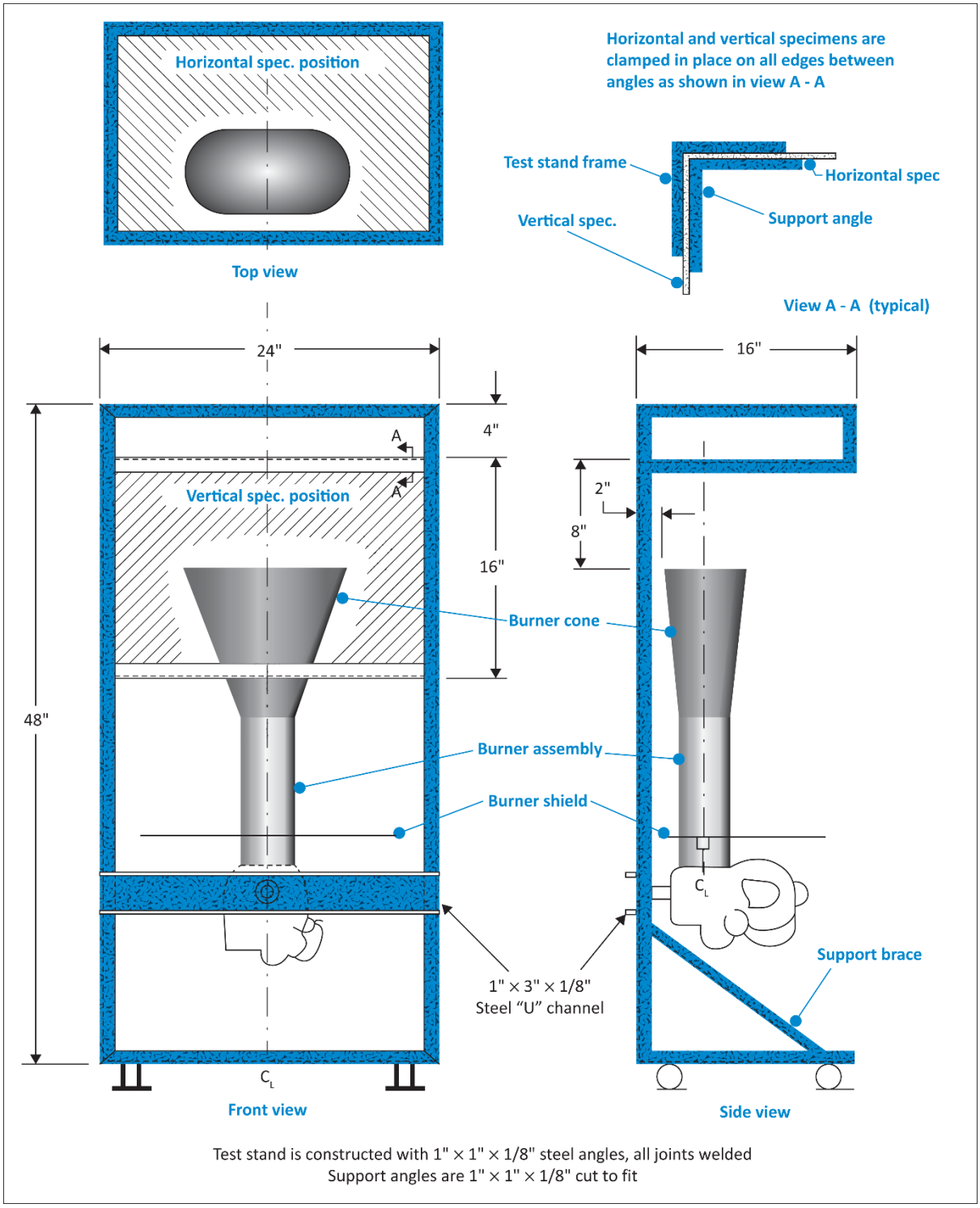

FIGURE 1 TEST APPARATUS FOR HORIZONTAL AND VERTICAL MOUNTING

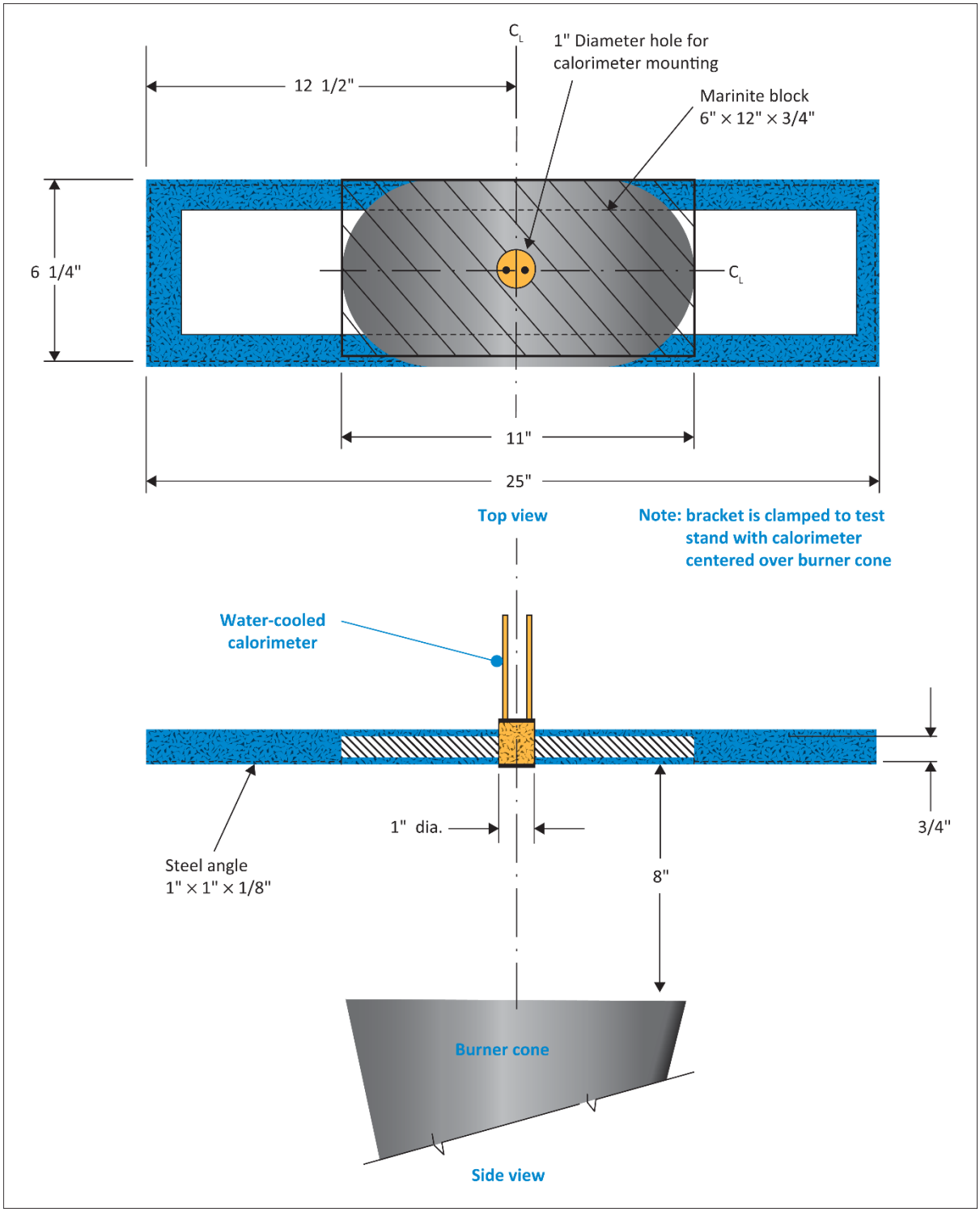

FIGURE 2 CALORIMETER BRACKET

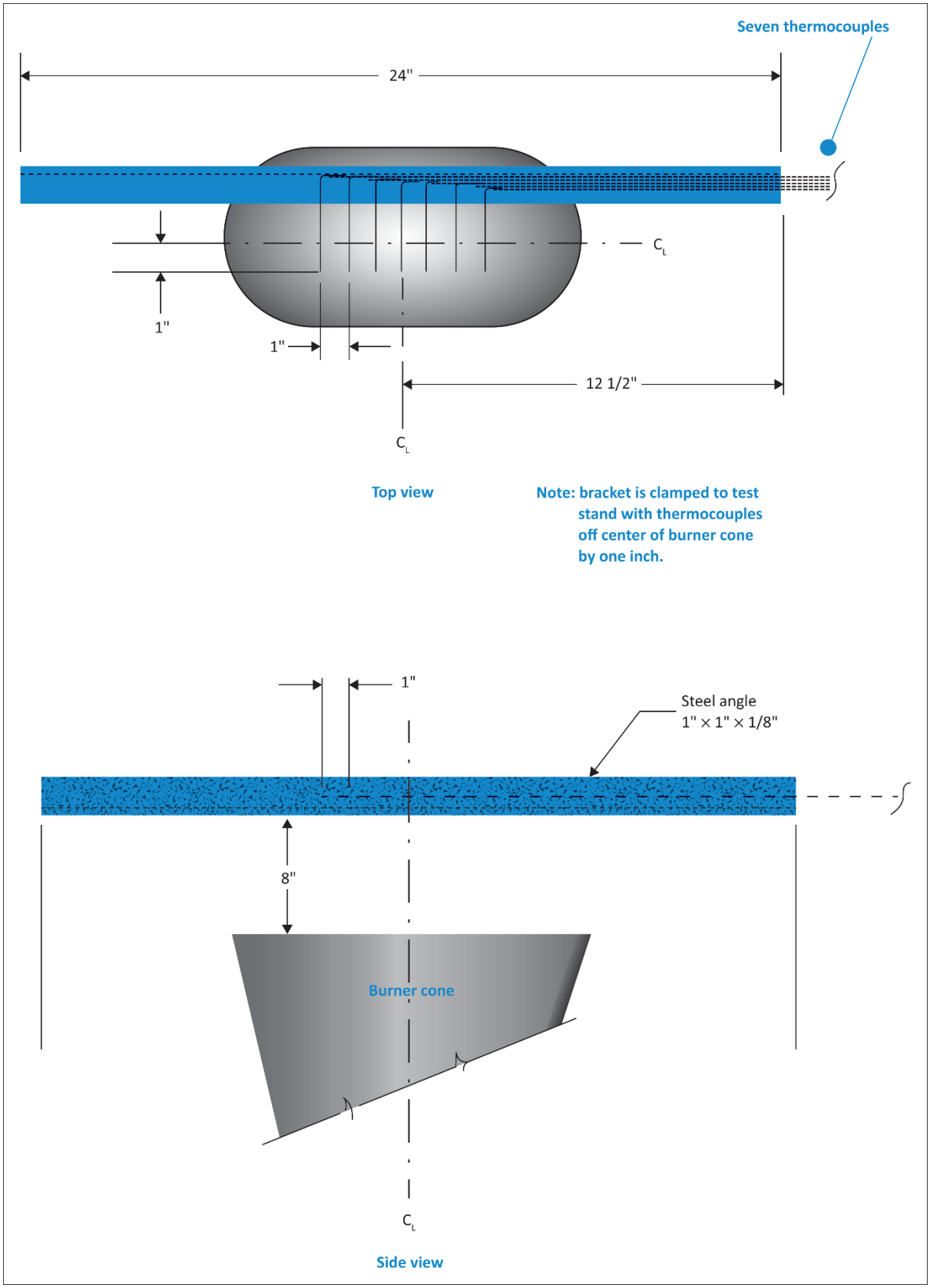

FIGURE 3 THERMOCOUPLE RAKE BRACKET

Part IV – Test Method to Determine the Heat Release Rate From Cabin Materials Exposed to Radiant Heat

ED Decision 2003/2/RM

(a) *Summary of Method*

(1) The specimen to be tested is injected into an environmental chamber through which a constant flow of air passes. The specimen's exposure is determined by a radiant heat source adjusted to produce the desired total heat flux on the specimen of 3·5 Watts/cm^2, using a calibrated calorimeter. The specimen is tested so that the exposed surface is vertical. Combustion is initiated by piloted ignition. The combustion products leaving the chamber are monitored in order to calculate the release rate of heat.

(b) *Apparatus.* The Ohio State University (OSU) rate of heat release apparatus as described below, is used. This is a modified version of the rate of heat release apparatus standardised by the American Society of Testing and Materials (ASTM), ASTM E-906.

(1) This apparatus is shown in Figure 1. All exterior surfaces of the apparatus, except the holding chamber, shall be insulated with 25 mm thick, low density, high-temperature, fibreglass board insulation. A gasketed door through which the sample injection rod slides forms an airtight closure on the specimen hold chamber.

(2) *Thermopile*. The temperature difference between the air entering the environmental chamber and that leaving is monitored by a thermopile having five hot and five cold, 24 gauge Chromel-Alumel junctions. The hot junctions are spaced across the top of the exhaust stack 10 mm below the top of the chimney. One thermocouple is located in the geometric centre; with the other four located 30 mm from the centre along the diagonal toward each of the corners (Figure 5). The cold junctions are located in the pan below the lower air distribution plate (see sub-paragraph (b)(4)). Thermopile hot junctions must be cleared of soot deposits as needed to maintain the calibrated sensitivity.

(3) *Radiation Source.* A radiant heat source for generating a flux up to 100 kW/m2, using four silicon carbide elements, Type LL, 50·8 cm (20 inches) long by 15·8 mm (0·625 inch) O.D., nominal resistance 1·4 ohms, is shown in Figures 2A and 2B. The silicon carbide elements are mounted in the stainless steel panel box by inserting them through 15·9 mm holes in 0·8 mm thick ceramic fibreboard. Location of the holes in the pads and stainless steel cover plates are shown in Figure 2B. The diamond shaped mask of 19-gauge stainless steel is added to provide uniform heat flux over the area occupied by the 150 by 150 mm vertical sample.

(4) *Air Distribution System*. The air entering the environmental chamber is distributed by a 6·3 mm thick aluminium plate having eight, No. 4 drill holes, 51 mm from sides on 102 mm centres, mounted at the base of the environmental chamber. A second plate of 18-gauge steel having 120, evenly spaced, No. 28 drill holes is mounted 150 mm above the aluminium plate. A well-regulated air supply is required. The air supply manifold at the base of the pyramidal section has 48, evenly spaced, No. 26 drill holes located 10 mm from the inner edge of the manifold so that 0·03 m^3/second of air flows between the pyramidal sections and 0·01 m^3/second flows through the environmental chamber when total air flow to apparatus is controlled at 0·04 m^3/second.

(5) *Exhaust Stack.* An exhaust stack, 133 mm by 70 mm in cross section, and 254 mm long, fabricated from 28-gauge stainless steel, is mounted on the outlet of the pyramidal section. A 25 mm by 76 mm plate of 31-gauge stainless steel is centred inside the stack, perpendicular to the airflow, 75 mm above the base of the stack.

(6) *Specimen Holders.* The 150 mm x 150 mm specimen is tested in a vertical orientation. The holder (Figure 3) is provided with a specimen holder frame, which touches the specimen (which is wrapped with aluminium foil as required by sub-paragraph (d)(3)) along only the 6 mm perimeter, and a "V" shaped spring to hold the assembly together. A detachable 12 mm x 12 mm x 150 mm drip pan and two 0.51 mm (0·020 inch) stainless steel wires (as shown in Figure 3) should be used for testing of materials prone to melting and dripping. The positioning of the spring and frame may be changed to accommodate different specimen thicknesses by inserting the retaining rod in different holes on the specimen holder.

Since the radiation shield described in ASTM E-906 is not used, a guide pin is added to the injection mechanism. This fits into a slotted metal plate on the injection mechanism outside of the holding chamber and can be used to provide accurate positioning of the specimen face after injection. The front surface of the specimen shall be 100 mm from the closed radiation doors after injection.

The specimen holder clips onto the mounted bracket (Figure 3). The mounting bracket is attached to the injection rod by three screws, which pass through a wide area washer welded onto a 13 mm nut. The end of the injection rod is threaded to screw into the nut and a 5.1 mm thick wide area washer is held between two 13 mm nuts which are adjusted to tightly cover the hole in the radiation doors through which the injection rod or calibration calorimeter pass.

(7) *Calorimeter.* A total-flux type calorimeter must be mounted in the centre of a 13 mm Kaowool "M" board inserted in the sample holder must be used to measure the total heat flux. The calorimeter must have a view angle of 180° and be calibrated for incident flux. The calorimeter calibration must be acceptable to the Agency.

(8) *Pilot-Flame Positions.* Pilot ignition of the specimen must be accomplished by simultaneously exposing the specimen to a lower pilot burner and an upper pilot burner, as described in sub-paragraphs (b)(8)(i) and (b)(8)(ii), respectively. The pilot burners must remain lighted for the entire 5-minute duration of the test.

(i) *Lower Pilot Burner.* The pilot-flame tubing must be 6·3 mm O.D., 0·8 mm wall, stainless steel tubing. A mixture of 120 cm^3/min. of methane and 850 cm^3/min. of air must be fed to the lower pilot flame burner. The normal position of the end of the pilot burner tubing is 10 mm from and perpendicular to the exposed vertical surface of the specimen. The centreline at the outlet of the burner tubing must intersect the vertical centreline of the sample at a point 5 mm above the lower exposed edge of the specimen.

(ii) *Upper Pilot Burner.* The pilot burner must be a straight length of 6·3 mm O.D., 0·8 mm wall, stainless steel tubing 360 mm long. One end of the tubing shall be closed, and three No. 40 drill holes shall be drilled into the tubing, 60 mm apart, for gas ports, all radiating in the same direction. The first hole must be 5 mm from the closed end of the tubing. The tube is inserted into the environmental chamber through a 6·6 mm hole drilled 10 mm above the upper edge of the window frame. The tube is supported and positioned by an adjustable "Z" shaped support mounted outside the environmental chamber, above the viewing window. The tube is positioned above and 20 mm behind the exposed upper edge of the specimen. The middle hole must be in the vertical plane perpendicular to the exposed surface of the specimen, which passes through its vertical centreline and

must be pointed toward the radiation source. The gas supplied to the burner must be methane adjusted to produce flame lengths of 25 mm.

(c) *Calibration of Equipment*

(1) *Heat Release Rate.* A burner as shown in Figure 4 must be placed over the end of the lower pilot flame tubing using a gas-tight connection. The flow of gas to the pilot flame must be at least 99% methane and must be accurately metered. Prior to usage, the wet test meter is properly levelled and filled with distilled water to the tip of the internal pointer while no gas is flowing. Ambient temperature and pressure of the water, are based on the internal wet test meter temperature. A baseline flow rate of approximately 1 litre/min. is set and increased to higher preset flows of 4, 6, 8, 6 and 4 litres/min. The rate is determined by using a stopwatch to time a complete revolution of the west test meter for both the baseline and higher flow, with the flow returned to baseline before changing to the next higher flow. The thermopile baseline voltage is measured. The gas flow to the burner must be increased to the higher preset flow and allowed to burn for 2·0 minutes, and the thermopile voltage must be measured. The sequence is repeated until all five values have been determined. The average of the five values must be used as the calibration factor. The procedure must be repeated if the percent relative standard deviation is greater than 5%. Calculations are shown in paragraph (f).

(2) *Flux Uniformity.* Uniformity of flux over the specimen must be checked periodically and after each heating element change to determine if it is within acceptable limits of ± 5%.

(d) *Sample Preparation*

(1) The standard size for vertically mounted specimens is 150 x 150 mm with thicknesses up to 45 mm.

(2) *Conditioning*. Specimens must be conditioned as described in Part 1 of this Appendix.

(3) *Mounting*. Only one surface of a specimen will be exposed during a test. A single layer of 0·025 mm aluminium foil is wrapped tightly on all unexposed sides.

(e) *Procedure*

(1) The power supply to the radiant panel is set to produce a radiant flux of 3·5 Watts/cm^2. The flux is measured at the point, which the centre of the specimen surface will occupy when positioned for test. The radiant flux is measured after the airflow through the equipment is adjusted to the desired rate. The sample should be tested in its end use thickness.

(2) The pilot flames are lighted and their position, as described in sub-paragraph (b)(8), is checked.

(3) The airflow to the equipment is set at 0·04 ± 0·001 m^3/s at atmospheric pressure. Proper air flow may be set and monitored by either: (1) An orifice meter designed to produce a pressure drop of at least 200 mm of the manometric fluid, or by (2) a rotometer (variable orifice meter) with a scale capable of being read to ± 0·0004 m^3/s. The stop on the vertical specimen holder rod is adjusted so that the exposed surface of the specimen is positioned 100 mm from the entrance when injected into the environmental chamber.

(4) The specimen is placed in the hold chamber with the radiation doors closed. The airtight outer door is secured, and the recording devices are started. The specimen must be retained in the hold chamber for 60 seconds ± 10 seconds, before injection. The thermopile “zero” value is determined during the last 20 seconds of the hold period.

(5) When the specimen is to be injected, the radiation doors are opened, the specimen is injected into the environmental chamber, and the radiation doors are closed behind the specimen.

(6) Reserved.

(7) Injection of the specimen and closure of the inner door marks time zero. A continuous record of the thermopile output with at least one data point per second must be made during the time the specimen is in the environmental chamber.

(8) The test duration time is five minutes.

(9) A minimum of three specimens must be tested.

(f) *Calculations*

(1) The calibration factor is calculated as follows:

$$K_h = \frac{(F_1 - F_0)}{(V_1 - V_2)} \times \frac{(210 \cdot 8 - 22)kcal}{mole} \times \frac{273}{T_a} \times \frac{P - P_V}{760} \times \frac{mole\ CH4STP}{22 \cdot 41} \times \frac{WATT_{min}}{.01433\ kcal} \times \frac{kW}{1000W}$$

F_0 = Flow of methane at baseline (1pm)

F_1 = Higher preset flow of methane (1pm)

V_0 = Thermopile voltage at baseline (mv)

V_1 = Thermopile voltage at higher flow (mv)

T_a = Ambient temperature (K)

P = Ambient pressure (mm Hg)

P_v = Water vapour pressure (mm Hg)

(2) Heat release rates may be calculated from the reading of the thermopile output voltage at any instant of time as:

$$HRR = \frac{V_m - V_b}{\cdot 02323m^2} \times K_h$$

HRR = Heat Release Rate kW/m^2

V_m = Measured thermopile voltage (mv)

V_b = Baseline voltage (mv)

K_h = Calibration Factor (kW/mv)

(3) The integral of the heat release rate is the total heat release as a function of time and is calculated by multiplying the rate by the data sampling frequency in minutes and summing the time from zero to two minutes.

(g) *Criteria*. The total positive heat release over the first two minutes of exposure for each of the three or more samples tested must be averaged, and the peak heat release rate for each of the samples must be averaged. The average total heat release must not exceed 65 kilowatt-minutes per square metre, and the average peak heat release rate must not exceed 65 kilowatts per square metre.

(h) *Report*. The test report must include the following for each specimen tested:

(1) Description of the specimen.

(2) Radiant heat flux to the specimen, expressed in Watts/cm^2.

(3) Data giving release rates of heat (in kW/m^2) as a function of time, either graphically or tabulated at intervals no greater than 10 seconds. The calibration factor (K_h) must be recorded.

(4) If melting, sagging, delaminating, or other behaviour that affects the exposed surface area or the mode of burning occurs, these behaviours must be reported, together with the time at which such behaviours were observed.

(5) The peak heat release and the 2 minute integrated heat release rate must be reported.

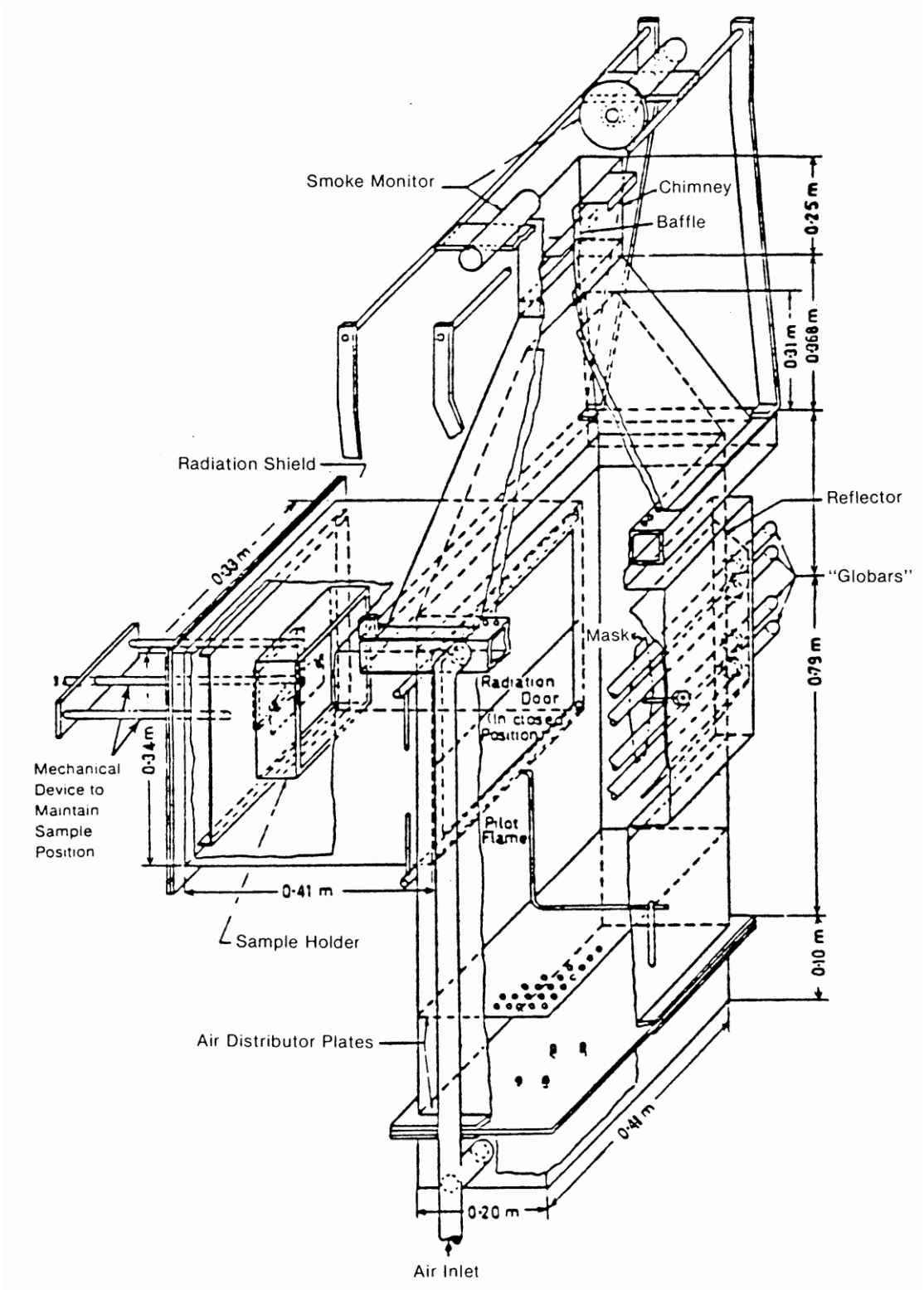

FIGURE 1. RELEASE RATE APPARATUS

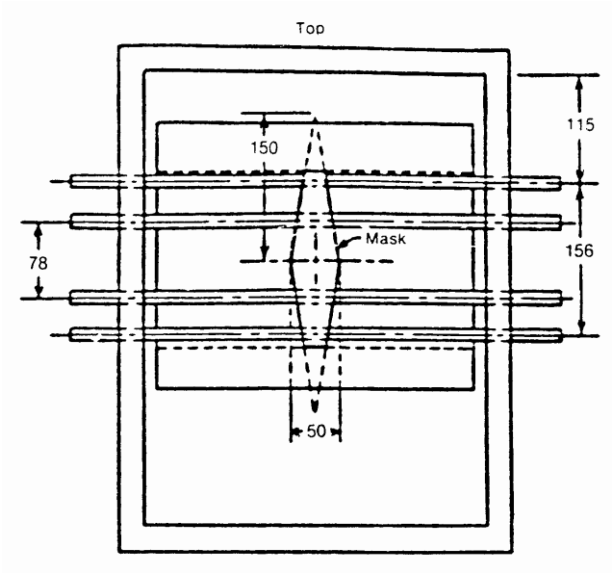

(Unless denoted otherwise, all dimensions are in millimetres.)

FIGURE 2A. "GLOBAR" RADIANT PANEL

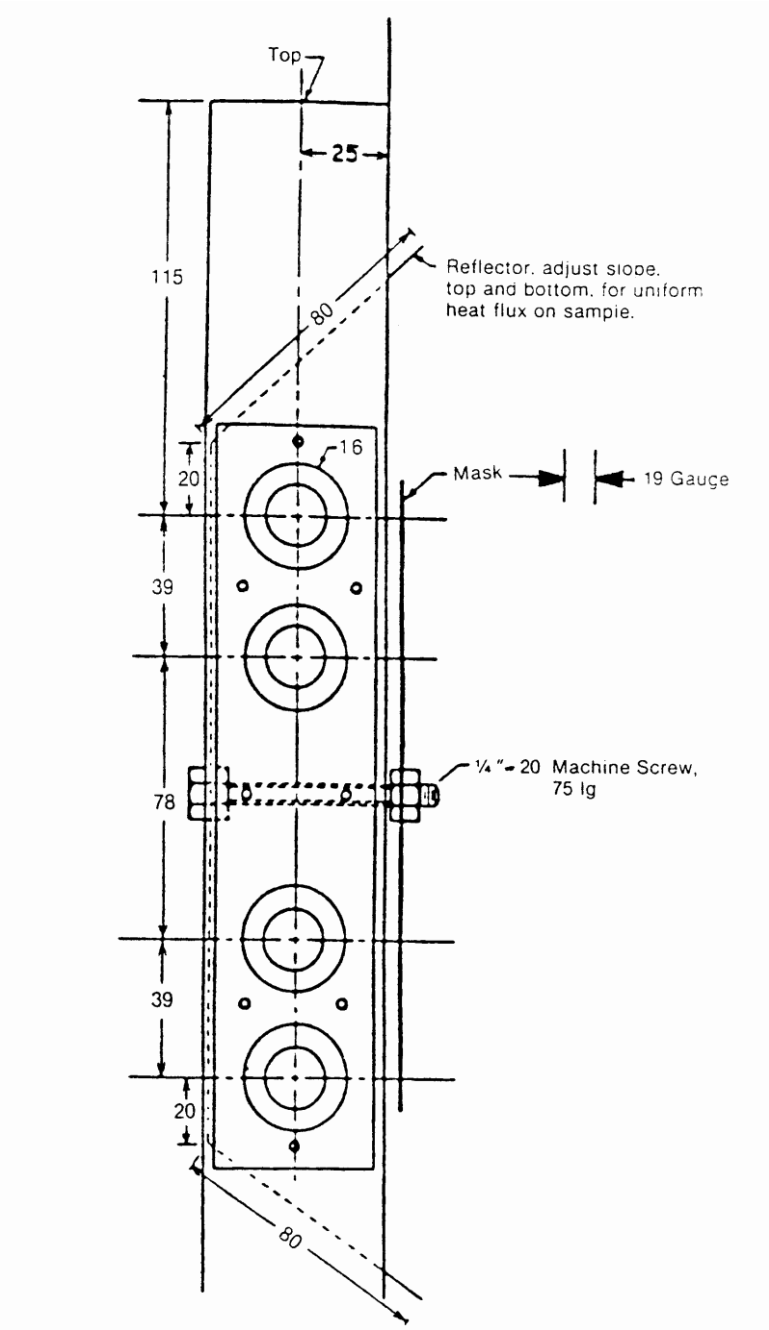

(Unless denoted otherwise, all dimensions are in millimetres.)

FIGURE 2B. "GLOBAR" RADIANT PANEL

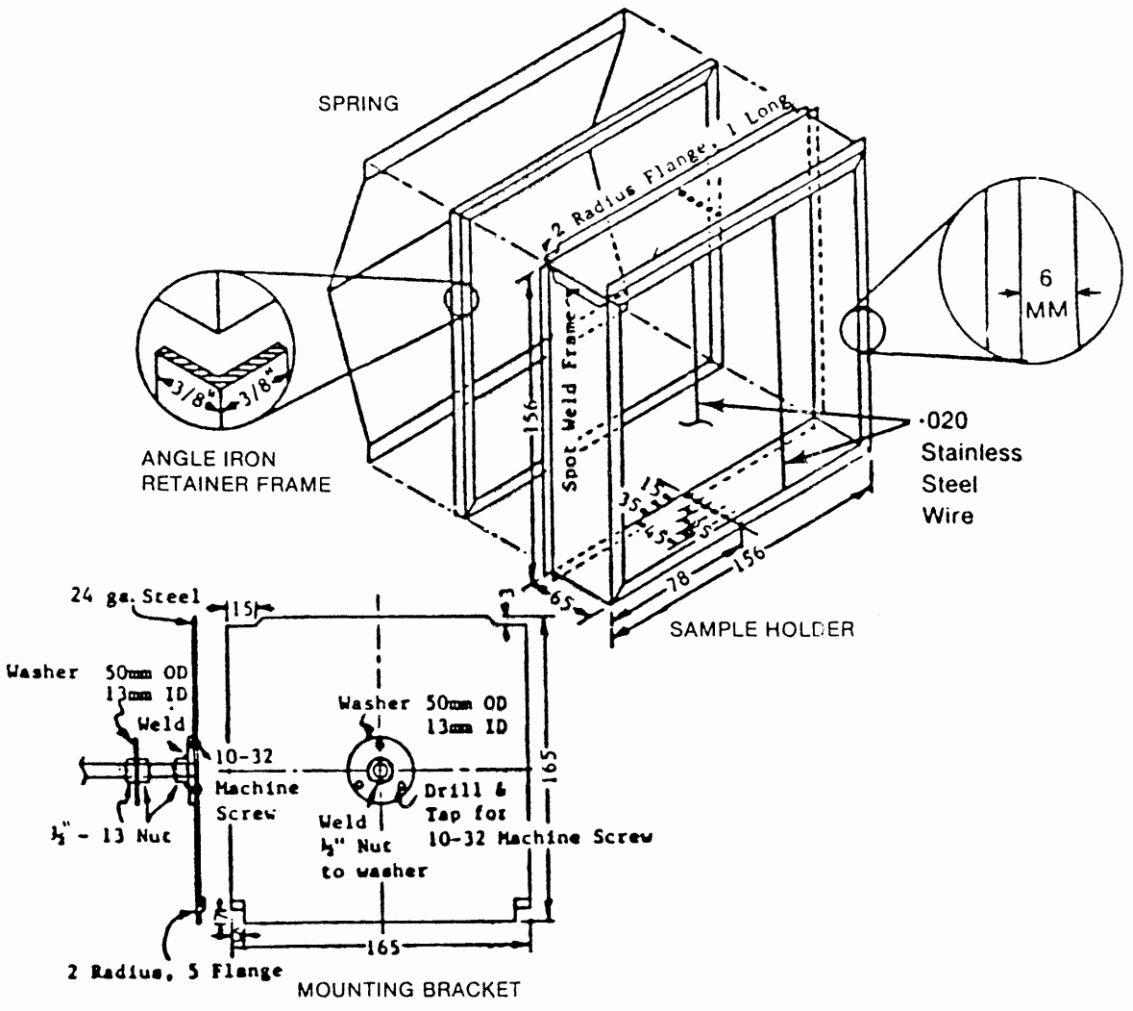

(Unless denoted otherwise, all dimensions are in millimetres.)

FIGURE 3.

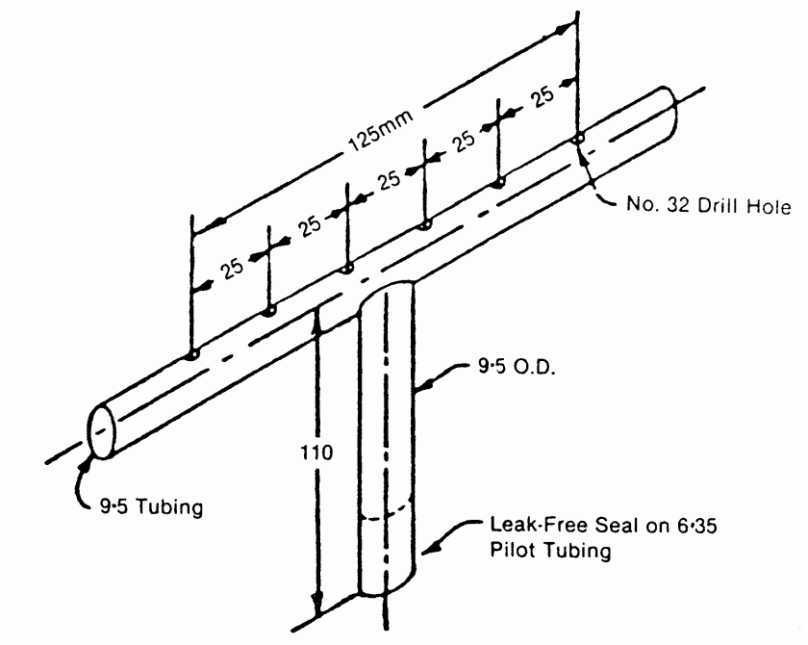

(Unless denoted otherwise, all dimensions are in millimetres.)

FIGURE 4.

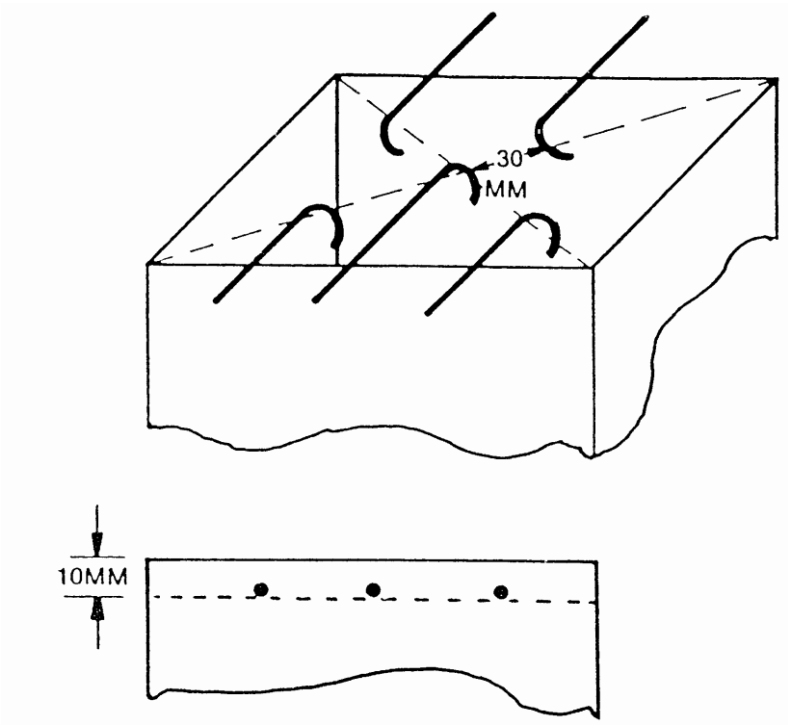

FIGURE 5. THERMOCOUPLE POSITION

AMC to Appendix F, Part IV – Test Method to Determine the Heat Release Rate from Cabin Materials Exposed to Radiant Heat

ED Decision 2003/2/RM

Appendix F, Part IV (b)(4) Air Distribution System.

The air distribution is to be determined by the equipment design. The 3-to-1 ratio described in this paragraph is approximate. An external air distribution system which will deliver that ratio precisely is not permitted as a substitute for the air distributor plates.

Appendix F, Part IV (b)(6) Specimen Holders.

In order to accommodate specimens which distort and delaminate during testing, two 0·508 mm (0·020-inch) stainless steel wires should be used to secure the specimens to the holder during the testing.

These wires should be used with all specimens and are in addition to the drip pan that should be used for materials which are prone to melting and dripping.

Appendix F, Part IV (b)(8) Pilot-Flame Positions.

Various installations have experienced difficulties with the pilot burners being extinguished during the test.

The following revisions to the pilot burner configurations have been found to be acceptable:

(1) For the lower pilot burner – a sparking device which either sparks automatically at approximately ½ to 1 second intervals or is manually operated, which requires continuous monitoring of the pilot flame.

Note: This requires that the laboratory test procedure specifies that the technician must continuously monitor the pilot for each test and that failure to do so will invalidate the test results.

(2) For the upper pilot burner – a manual or automatic sparking device or a revision to the hole system in the burner. One approved deviation utilises 14 holes using a number 59 drill bit.

Appendix F, Part IV (c)(1) Heat Release Rate.

The use of a flowmeter is not acceptable.

The thermopile voltage should be measured for 10 seconds and then averaged.

Appendix F, Part IV (e) Procedure.

The outer door should be closed between tests to maintain the heat within the chamber. It is recommended that the outer door be hinged to facilitate implementing this recommendation. If a detachable door is used, a separate door should be installed during sample holder preparation and installation. This recommendation is based on the 40-seconds holding time (60 seconds less 20 seconds of data acquisition time) required in (e)(4), being insufficient to allow the chamber to reach equilibrium, if the outer door is open for too long between tests.

Appendix F, Part IV (f) Calculations.

It has been found that a typical range for the calibration factor is 8 to 15. If a calibration factor is calculated which falls outside this range, the calculation should be reviewed.

If the factor continues to fall outside this range, the Agency should be contacted.

Part V – Test Method to Determine the Smoke Emission Characteristics of Cabin Materials

ED Decision 2003/2/RM

(a) *Summary of Method.* The specimens must be constructed, conditioned, and tested in the flaming mode in accordance with American Society of Testing and Materials (ASTM) Standard Test Method ASTM F814-83.

(b) *Acceptance Criteria.* The specific optical smoke density (Ds) which is obtained by averaging the reading obtained after 4 minutes with each of the three specimens, shall not exceed 200.

APPENDIX H – INSTRUCTIONS FOR CONTINUED AIRWORTHINESS

H25.1 General

ED Decision 2003/2/RM

(a) This Appendix specifies requirements for the preparation of Instructions for Continued Airworthiness as required by CS 25.1529.

(b) The Instructions for Continued Airworthiness for each aeroplane must include the Instructions for Continued Airworthiness for each engine and propeller (hereinafter designated 'products'), for each appliance required by this CS-25 and any required information relating to the interface of those appliances and products with the aeroplane. If Instructions for Continued Airworthiness are not supplied by the manufacturer of an appliance or product installed in the aeroplane, the Instructions for Continued Airworthiness for the aeroplane must include the information essential to the continued airworthiness of the aeroplane.

H25.2 Format

ED Decision 2003/2/RM

(a) The Instructions for Continued Airworthiness must be in the form of a manual or manuals as appropriate for the quantity of data to be provided.

(b) The format of the manual or manuals must provide for a practical arrangement.

H25.3 Content

ED Decision 2003/2/RM

The contents of the manual or manuals must be prepared in a language acceptable to the Agency. The Instructions for Continued Airworthiness must contain the following manuals or sections, as appropriate, and information:

(a) Aeroplane maintenance manual or section

(1) Introduction information that includes an explanation of the aeroplane's features and data to the extent necessary for maintenance or preventive maintenance.

(2) A description of the aeroplane and its systems and installations including its engines, propellers, and appliances.

(3) Basic control and operation information describing how the aeroplane components and systems are controlled and how they operate, including any special procedures and limitations that apply.

(4) Servicing information that covers details regarding servicing points, capacities of tanks, reservoirs, types of fluids to be used, pressures applicable to the various systems, location of access panels for inspection and servicing, locations of lubrication points, lubricants to be used, equipment required for servicing, tow instructions and limitations, mooring, jacking, and levelling information.

(b) Maintenance Instructions

(1) Scheduling information for each part of the aeroplane and its engines, auxiliary power units, propellers, accessories, instruments, and equipment that provides the recommended periods at which they should be cleaned, inspected, adjusted, tested, and lubricated, and the degree of inspection, the applicable wear tolerances, and work

recommended at these periods. However, reference may be made to information from an accessory, instrument or equipment manufacturer as the source of this information if it is shown that the item has an exceptionally high degree of complexity requiring specialized maintenance techniques, test equipment, or expertise. The recommended overhaul periods and necessary cross references to the Airworthiness Limitations section of the manual must also be included. In addition, an inspection programme that includes the frequency and extent of the inspections necessary to provide for the continued airworthiness of the aeroplane must be included.

(2) Troubleshooting information describing probable malfunctions, how to recognise those malfunctions, and the remedial action for those malfunctions.

(3) Information describing the order and method of removing and replacing products and parts with any necessary precautions to be taken.

(4) Other general procedural instructions including procedures for system testing during ground running, symmetry checks, weighing and determining the centre of gravity, lifting and shoring, and storage limitations.

(c) Diagrams of structural access plates and information needed to gain access for inspections when access plates are not provided.

(d) Details for the application of special inspection techniques including radiographic and ultrasonic testing where such processes are specified.

(e) Information needed to apply protective treatments to the structure after inspection.

(f) All data relative to structural fasteners such as identification, discard recommendations, and torque values.

(g) A list of special tools needed.

H25.4 Airworthiness Limitations section

ED Decision 2003/2/RM

The Instructions for Continued Airworthiness must contain a section titled Airworthiness Limitations that is segregated and clearly distinguishable from the rest of the document. This section must set forth each mandatory replacement time, structural inspection interval, and related structural inspection procedure approved under CS 25.571. If the Instructions for Continued Airworthiness consist of multiple documents, the section required by this paragraph must be included in the principal manual. This section must contain a legible statement in a prominent location that reads: 'The Airworthiness Limitations Section is approved and variations must also be approved'.

APPENDIX I – AUTOMATIC TAKEOFF THRUST CONTROL SYSTEM (ATTCS)

I 25.1 General

ED Decision 2003/2/RM

(a) This Appendix specifies additional requirements and limitations for aeroplanes equipped with an engine control system that automatically resets thrust or power on the operating engine(s) when any engine fails during take-off, and for which performance credit is limited to that of paragraph 25.3(b) of this Appendix. When performance credit is not so limited, Special Conditions will apply.

(b) With the ATTCS system and associated systems functioning normally as designed, all applicable requirements of CS-25, except as provided in this Appendix, must be met without requiring any action by the crew to increase thrust or power.

I 25.2 Definitions

ED Decision 2003/2/RM

(a) *AutomaticTakeoff Thrust Control System (ATTCS)*. An ATTCS system is defined as a system which automatically resets thrust or power on the operating engine(s) when any engine fails during take-off. For the purpose of the requirements in this Appendix, the ATTCS system comprises all elements of equipment necessary for the control and performance of each intended function, including all devices both mechanical and electrical that sense engine failure, transmit signals and actuate fuel controls or power levers of the operating engine(s) to achieve scheduled thrust or power increases, the engine control system and devices which furnish cockpit information on system operation.

(b) *Critical Time Interval.* When conducting an ATTCS take-off, the critical time interval is between one second before reaching V_1, and the point on the gross take-off flight path with all engines operating where, assuming a simultaneous engine and ATTCS system failure, the resulting flight path thereafter intersects the gross flight path, determined in accordance with CS 25.115, at not less than 122 m (400 feet) above the take-off surface. This definition is shown in the following figure:

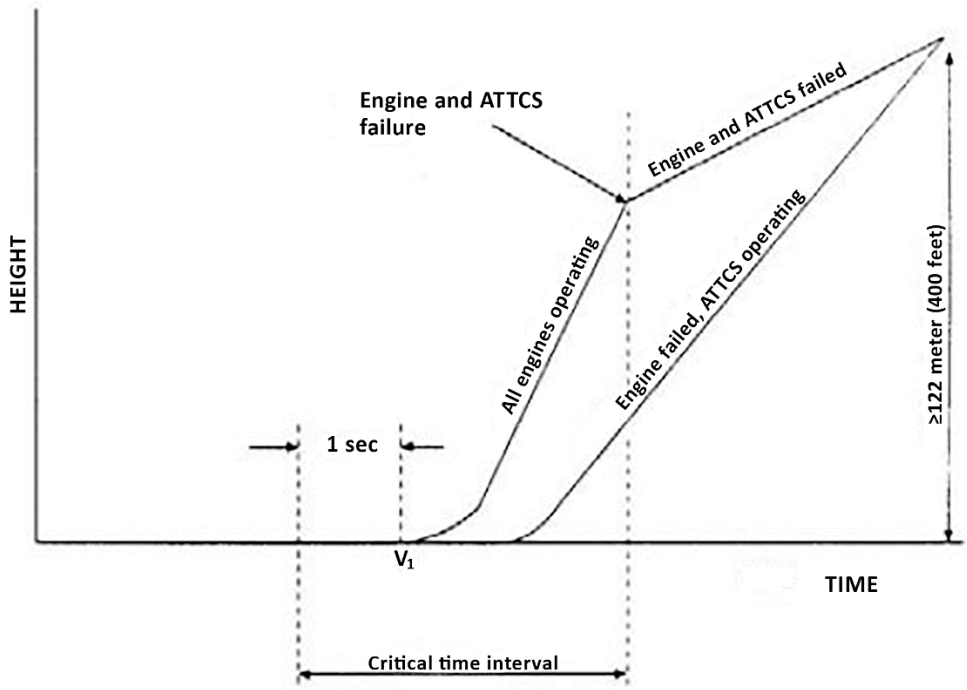

I 25.3 Performance requirements

ED Decision 2003/2/RM

All applicable performance requirements of CS-25 must be met with the ATTCS system functioning normally as designed, except that the propulsive thrust obtained from each operating engine after failure of the critical engine during take-off, and the thrust at which compliance with the one-engine-inoperative climb requirements in CS 25.121(a) and (b) is shown, must be assumed to be not greater than the lesser of –

(a) The actual propulsive thrust resulting from the initial setting of power or thrust controls with the ATTCS system functioning normally as designed, without requiring any action by the crew to increase thrust or power until the aeroplane has achieved a height of 122 m (400 feet) above the take-off surface; or

(b) 111 percent of the propulsive thrust which would have been available at the initial setting of power or thrust controls in the event of failure of the ATTCS system to reset thrust or power, without any action by the crew to increase thrust or power until the aeroplane has achieved a height of 122 m (400 feet) above the take-off surface.

Note 1. The limitation of performance credit for ATTCS system operation to 111 percent of the thrust provided at the initial setting is intended to:

(i) Assure an adequate level of climb performance with all engines operating at the initial setting of power or thrust controls, and

(ii) Limit the degradation of performance in the event of a critical engine failure combined with failure of the ATTCS system to operate as designed.

Note 2. For propeller-driven aeroplanes, propulsive thrust means the total effective propulsive force obtained from an operating engine and its propeller.

I 25.4 Reliability requirements

ED Decision 2003/2/RM

(a) The occurrence of an ATTCS system failure or a combination of failures in the ATTCS system during the critical time interval which –

(1) Prevents the insertion of the required thrust or power, must be shown to be Improbable;

(2) Results in a significant loss or reduction in thrust or power, must be shown to be Extremely Improbable.

(b) The concurrent existence of an ATTCS system failure and an engine failure during the critical time interval must be shown to be Extremely Improbable.

(c) The inadvertent operation of the ATTCS system must be shown either to be Remote or to have no more than a minor effect.

I 25.5 Thrust or power setting

ED Decision 2003/2/RM

The initial setting of thrust or power controls on each engine at the beginning of the take-off roll may not be less than the lesser of –

(a) That required to permit normal operation of all safety-related systems and equipment dependent upon engine thrust or power lever position; or

(b) That shown to be free of hazardous engine response characteristics when thrust or power is increased from the initial take-off thrust or power level to the maximum approved take-off thrust or power.

I 25.6 Powerplant controls

ED Decision 2003/2/RM

(a) *General*

(1) In addition to the requirements of CS 25.1141, no single failure or malfunction, or probable combination thereof, of the ATTCS system, including associated systems, may cause the failure of any powerplant function necessary for safety.

(2) The ATTCS system must be designed to perform accurately its intended function without exceeding engine operating limits under all reasonably expected conditions.

(b) *Thrust or Power Lever Control.* The ATTCS system must be designed to permit manual decrease or increase in thrust or power up to the maximum thrust or power approved for use following engine failure during take-off through the use of the normal thrust or power controls, except that, for aeroplanes equipped with limiters that automatically prevent engine operating limits from being exceeded, other means may be used to increase thrust or power provided that the means is located in an accessible position on or close to the thrust or power levers, is easily identified, and operated under all operating conditions by a single action of either pilot with the hand that is normally used to actuate the thrust or power levers.

(c) *System Control and Monitoring.* The ATTCS system must be designed to provide –

(1) A means for checking prior to takeoff that the system is in an operable condition; and

(2) A means for the flight crew to deactivate the automatic function. This means must be designed to prevent inadvertent deactivation.

I 25.7 Powerplant instruments

ED Decision 2003/2/RM

(a) *System Control and Monitoring.* A means must be provided to indicate when the ATTCS system is in the armed or ready condition.

(b) *Engine Failure Warning.* If the inherent flight characteristics of the aeroplane do not provide adequate warning that an engine has failed, a warning system which is independent of the ATTCS system must be provided to give the pilot a clear warning of engine failure during take-off.

APPENDIX J – EMERGENCY DEMONSTRATION

ED Decision 2006/005/R

The following test criteria and procedures must be used for showing compliance with CS 25.803:

(a) The emergency evacuation must be conducted either during the dark of the night or during daylight with the dark of night simulated. If the demonstration is conducted indoors during daylight hours, it must be conducted with each window covered and each door closed to minimise the daylight effect. Illumination on the floor or ground may be used, but it must be kept low and shielded against shining into the aeroplane's windows or doors.

(b) The aeroplane must be in a normal attitude with landing gear extended.

(c) Unless the aeroplane is equipped with an off-wing descent means, stands or ramps may be used for descent from the wing to the ground. Safety equipment such as mats or inverted life rafts may be placed on the floor or ground to protect participants. No other equipment that is not part of the aeroplane's emergency evacuation equipment may be used to aid the participants in reaching the ground.

(d) Except as provided in paragraph (a) of this Appendix, only the aeroplane's emergency lighting system may provide illumination.

(e) All emergency equipment required for the planned operation of the aeroplane must be installed.

(f) Each external door and exit, and each internal door or curtain, must be in the take-off configuration.

(g) Each crew member must be seated in the normally assigned seat for take-off and must remain in the seat until receiving the signal for commencement of the demonstration. Each crewmember must be a person having knowledge of the operation of exits and emergency equipment and, if compliance with the applicable Operating Rules is also being demonstrated, each cabin crewmember must be a member of a regularly scheduled line crew.

(h) A representative passenger load of persons in normal health must be used as follows:

(1) At least 40% of the passenger load must be females.

(2) At least 35% of the passenger load must be over 50 years of age.

(3) At least 15% of the passenger load must be female and over 50 years of age.

(4) Three life-size dolls, not included as part of the total passenger load, must be carried by passengers to simulate live infants 2 years old or younger.

(5) Crew members, mechanics, and training personnel who maintain or operate the aeroplane in the normal course of their duties, may not be used as passengers.

(i) No passenger may be assigned a specific seat except as the Agency may require. Except as required by sub-paragraph (g) of this Appendix, no employee of the applicant may be seated next to an emergency exit.

(j) Seat belts and shoulder harnesses (as required) must be fastened.

(k) Before the start of the demonstration, approximately one-half of the total average amount of carry-on baggage, blankets, pillows, and other similar articles must be distributed at several locations in aisles and emergency exit access ways to create minor obstructions.

(l) No prior indication may be given to any crewmember or passenger of the particular exits to be used in the demonstration.

(m) There must not be any practising, rehearsing or description of the demonstration for the participants nor may any participant have taken part in this type of demonstration within the preceding 6 months.

(n) The pre take-off passenger briefing required by the applicable Operating Rules may be given. The passengers may also be advised to follow directions of crewmembers but not be instructed on the procedures to be followed in the demonstration.

(o) If safety equipment as allowed by subparagraph (c) of this Appendix is provided, either all passenger and cockpit windows must be blacked out or all of the emergency exits must have safety equipment in order to prevent disclosure of the available emergency exits.

(p) Not more than 50% of the emergency exits in the sides of the fuselage of an aeroplane that meets all of the requirements applicable to the required emergency exits for that aeroplane may be used for the demonstration. Exits that are not to be used in the demonstration must have the exit handle deactivated or must be indicated by red lights, red tape, or other acceptable means placed outside the exits to indicate fire or other reason why they are unusable. The exits to be used must be representative of all of the emergency exits on the aeroplane and must be designated prior to the demonstration and subject to approval by the Agency. At least one floor level exit must be used.

(q) Except as provided in sub-paragraph (c) of this paragraph, all evacuees must leave the aeroplane by a means provided as part of the aeroplane's equipment.

(r) The applicant's approved procedures must be fully utilised, except the flight-crew must take no active role in assisting others inside the cabin during the demonstration.

(s) The evacuation time period is completed when the last occupant has evacuated the aeroplane and is on the ground. Provided that the acceptance rate of the stand or ramp is no greater than the acceptance rate of the means available on the aeroplane for descent from the wing during an actual crash situation, evacuees using stands or ramps allowed by sub-paragraph (c) of this Appendix are considered to be on the ground when they are on the stand or ramp.

[Amdt 25/2]

APPENDIX K – INTERACTION OF SYSTEMS AND STRUCTURE

K25.1 General

ED Decision 2005/006/R

The following criteria must be used for showing compliance with CS 25.302 for aeroplanes equipped with flight control systems, autopilots, stability augmentation systems, load alleviation systems, flutter control systems, and fuel management systems. If this appendix is used for other systems, it may be necessary to adapt the criteria to the specific system.

(a) The criteria defined herein only address the direct structural consequences of the system responses and performances and cannot be considered in isolation but should be included in the overall safety evaluation of the aeroplane. These criteria may in some instances duplicate standards already established for this evaluation. These criteria are only applicable to structure whose failure could prevent continued safe flight and landing. Specific criteria that define acceptable limits on handling characteristics or stability requirements when operating in the system degraded or inoperative mode are not provided in this appendix.

(b) Depending upon the specific characteristics of the aeroplane, additional studies may be required that go beyond the criteria provided in this appendix in order to demonstrate the capability of the aeroplane to meet other realistic conditions such as alternative gust or manoeuvre descriptions for an aeroplane equipped with a load alleviation system.

(c) The following definitions are applicable to this appendix.

Structural performance: Capability of the aeroplane to meet the structural requirements of CS-25.

Flight limitations: Limitations that can be applied to the aeroplane flight conditions following an in-flight occurrence and that are included in the flight manual (e.g., speed limitations, avoidance of severe weather conditions, etc.).

Operational limitations: Limitations, including flight limitations, that can be applied to the aeroplane operating conditions before dispatch (e.g., fuel, payload and Master Minimum Equipment List limitations).

Probabilistic terms: The probabilistic terms (probable, improbable, extremely improbable) used in this appendix are the same as those used in CS 25.1309.

Failure condition: The term failure condition is the same as that used in CS 25.1309, however this appendix applies only to system failure conditions that affect the structural performance of the aeroplane (e.g., system failure conditions that induce loads, change the response of the aeroplane to inputs such as gusts or pilot actions, or lower flutter margins).

[Amdt 25/1]

K25.2 Effects of Systems on Structures

ED Decision 2005/006/R

(a) General. The following criteria will be used in determining the influence of a system and its failure conditions on the aeroplane structure.

(b) System fully operative. With the system fully operative, the following apply:

(1) Limit loads must be derived in all normal operating configurations of the system from all the limit conditions specified in Subpart C, taking into account any special behaviour of

such a system or associated functions or any effect on the structural performance of the aeroplane that may occur up to the limit loads. In particular, any significant nonlinearity (rate of displacement of control surface, thresholds or any other system nonlinearities) must be accounted for in a realistic or conservative way when deriving limit loads from limit conditions.

(2) The aeroplane must meet the strength requirements of CS-25 (Static strength, residual strength), using the specified factors to derive ultimate loads from the limit loads defined above. The effect of nonlinearities must be investigated beyond limit conditions to ensure the behaviour of the system presents no anomaly compared to the behaviour below limit conditions. However, conditions beyond limit conditions need not be considered when it can be shown that the aeroplane has design features that will not allow it to exceed those limit conditions.

(3) The aeroplane must meet the aeroelastic stability requirements of CS 25.629.

(c) System in the failure condition. For any system failure condition not shown to be extremely improbable, the following apply:

(1) At the time of occurrence. Starting from 1-g level flight conditions, a realistic scenario, including pilot corrective actions, must be established to determine the loads occurring at the time of failure and immediately after failure.

(i) For static strength substantiation, these loads multiplied by an appropriate factor of safety that is related to the probability of occurrence of the failure are ultimate loads to be considered for design. The factor of safety (F.S.) is defined in Figure 1.

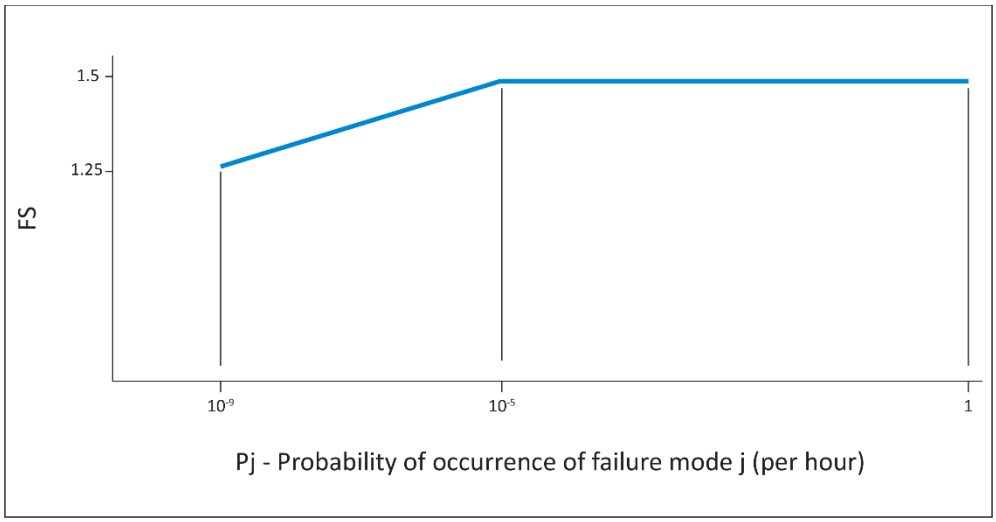

Figure 1 Factor of safety at the time of occurrence

(ii) For residual strength substantiation, the aeroplane must be able to withstand two thirds of the ultimate loads defined in subparagraph (c)(1)(i). For pressurised cabins, these loads must be combined with the normal operating differential pressure.

(iii) Freedom from aeroelastic instability must be shown up to the speeds defined in CS 25.629(b)(2). For failure conditions that result in speed increases beyond V_C/M_C, freedom from aeroelastic instability must be shown to increased speeds, so that the margins intended by CS 25.629(b)(2) are maintained.

(iv) Failures of the system that result in forced structural vibrations (oscillatory failures) must not produce loads that could result in detrimental deformation of primary structure.

(2) For the continuation of the flight. For the aeroplane, in the system failed state and considering any appropriate reconfiguration and flight limitations, the following apply:

(i) The loads derived from the following conditions at speeds up to V_C / M_C, or the speed limitation prescribed for the remainder of the flight must be determined:

(A) the limit symmetrical manoeuvring conditions specified in CS 25.331 and in CS 25.345.

(B) the limit gust and turbulence conditions specified in CS 25.341 and in CS 25.345.

(C) the limit rolling conditions specified in CS 25.349 and the limit unsymmetrical conditions specified in CS 25.367 and CS 25.427(b) and (c).

(D) the limit yaw manoeuvring conditions specified in CS 25.351.

(E) the limit ground loading conditions specified in CS 25.473 and CS 25.491.

(ii) For static strength substantiation, each part of the structure must be able to withstand the loads in subparagraph (2)(i) of this paragraph multiplied by a factor of safety depending on the probability of being in this failure state. The factor of safety is defined in Figure 2.

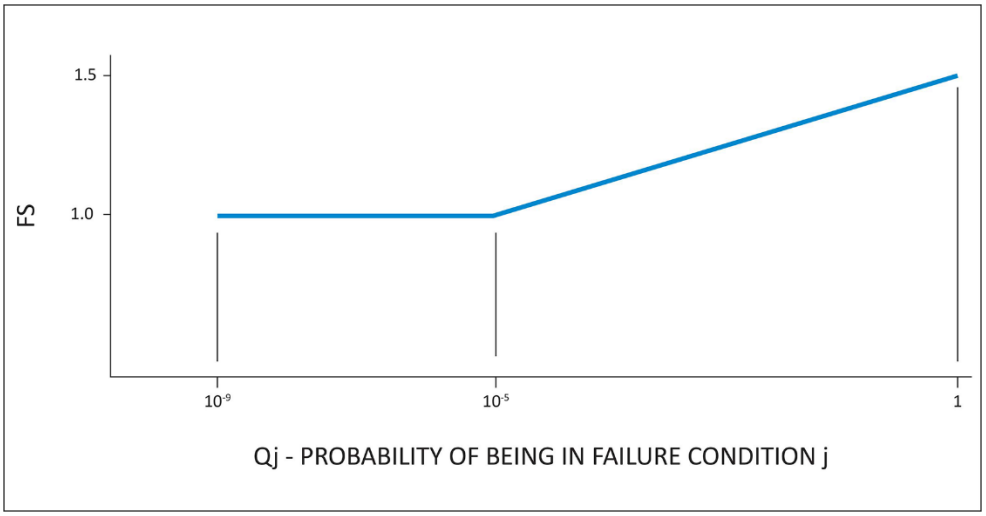

Figure 2 Factor of safety for continuation of flight

Qj = (Tj)(Pj) where:

Tj = Average time spent in failure condition j (in hours)

Pj = Probability of occurrence of failure mode j (per hour)

Note: If Pj is greater than 10^{-3}, per flight hour then a 1.5 factor of safety must be applied to all limit load conditions specified in Subpart C.

(iii) For residual strength substantiation, the aeroplane must be able to withstand two thirds of the ultimate loads defined in subparagraph (c)(2)(ii). For pressurised cabins, these loads must be combined with the normal operating differential pressure.

(iv) If the loads induced by the failure condition have a significant effect on fatigue or damage tolerance then their effects must be taken into account.

(v) Freedom from aeroelastic instability must be shown up to a speed determined from Figure 3. Flutter clearance speeds V' and V'' may be based on the speed limitation specified for the remainder of the flight using the margins defined by CS 25.629(b).

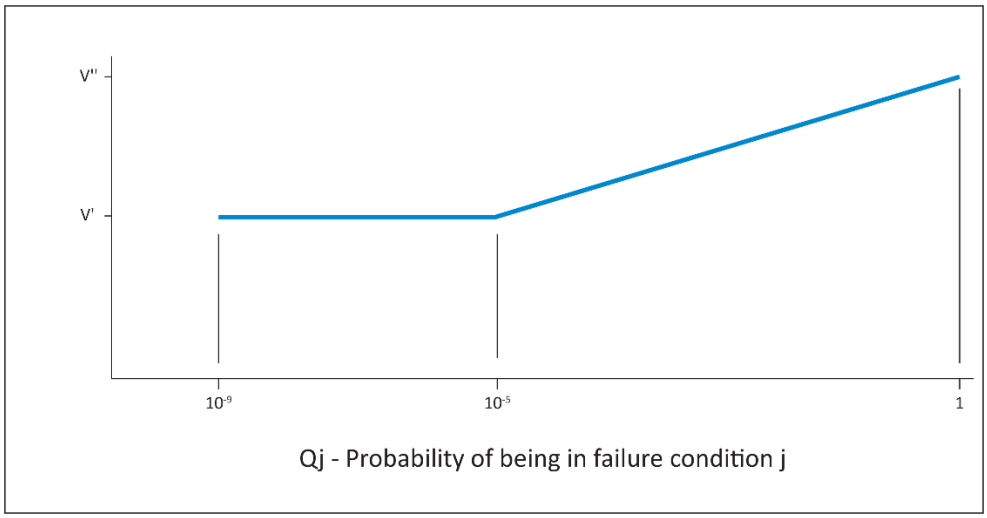

Figure 3: Clearance speed

V' = Clearance speed as defined by CS 25.629(b)(2).

V'' = Clearance speed as defined by CS 25.629(b)(1).

Qj = (Tj)(Pj) where:

Tj = Average time spent in failure condition j (in hours)

Pj = Probability of occurrence of failure mode j (per hour)

Note: If Pj is greater than 10^{-3} per flight hour, then the flutter clearance speed must not be less than V''.

(vi) Freedom from aeroelastic instability must also be shown up to V' in Figure 3 above, for any probable system failure condition combined with any damage required or selected for investigation by CS 25.571(b).

(3) Consideration of certain failure conditions may be required by other Subparts of CS-25 regardless of calculated system reliability. Where analysis shows the probability of these failure conditions to be less than 10^{-9}, criteria other than those specified in this paragraph may be used for structural substantiation to show continued safe flight and landing.

(d) Failure indications. For system failure detection and indication, the following apply:

(1) The system must be checked for failure conditions, not extremely improbable, that degrade the structural capability below the level required by CS-25 or significantly reduce the reliability of the remaining system. As far as reasonably practicable, the flight crew must be made aware of these failures before flight. Certain elements of the control system, such as mechanical and hydraulic components, may use special periodic inspections, and electronic components may use daily checks, in lieu of detection and indication systems to achieve the objective of this requirement. These certification maintenance requirements must be limited to components that are not readily

detectable by normal detection and indication systems and where service history shows that inspections will provide an adequate level of safety.

(2) The existence of any failure condition, not extremely improbable, during flight that could significantly affect the structural capability of the aeroplane and for which the associated reduction in airworthiness can be minimised by suitable flight limitations, must be signalled to the flight crew. For example, failure conditions that result in a factor of safety between the aeroplane strength and the loads of Subpart C below 1.25, or flutter margins below V", must be signalled to the crew during flight.

(e) Dispatch with known failure conditions. If the aeroplane is to be dispatched in a known system failure condition that affects structural performance, or affects the reliability of the remaining system to maintain structural performance, then the provisions of CS 25.302 must be met for the dispatched condition and for subsequent failures. Flight limitations and expected operational limitations may be taken into account in establishing Qj as the combined probability of being in the dispatched failure condition and the subsequent failure condition for the safety margins in Figures 2 and 3. These limitations must be such that the probability of being in this combined failure state and then subsequently encountering limit load conditions is extremely improbable. No reduction in these safety margins is allowed if the subsequent system failure rate is greater than 10^{-3} per hour.

[Amdt 25/1]

APPENDIX L

ED Decision 2005/006/R

Element of System	Strength Value		Remarks
	Proof	Ultimate	
Rigid pipes and ducts Couplings Flexible hoses Return line elements	1·5 P_W 1·5 P_W 2·0 P_W –	3·0 P_W 3·0 P_W 4·0 P_W 1·5 P_f	P_f The maximum pressure applied during failure conditions.
Components other than pipes, couplings, ducts or pressure vessels	1·5 P_W	2·0 P_W	
Pressure vessels fabricated from metallic materials. (For non-metallic materials see CS 25.1436(b)(7)) Pressure vessels connected to a line source of pressure	3·0 P_L or 1·5 P_L	4·0 P_L or 2·0 P_L	The lower values are conditional upon justification by a fatigue endurance test from which a permissible fatigue life is declared, and upon the ultimate load test being made on the test specimen used for the fatigue life test.
Pressure vessels not connected to a line source of pressure, e.g. emergency vessels inflated from a ground source	2·5 P_L or 1·5 P_L	3·0 P_L or 2·0 P_L	The lower values are conditional upon justification by a life endurance test of a suitably factored permissible number of inflation/deflation cycles, including temperature fluctuation results in a significant pressure variation, and upon the ultimate load test being made on the test specimen used for the life endurance test. For all pressure vessels: (1) The minimum acceptable conditions for storage, handling and inspection are to be defined in the appropriate manual. See CS 25.1529. (2) The proof factor is to be sustained for at least three minutes. (3) The ultimate factor is to be sustained for at least one minute. The factor having been achieved, the pressure vessel may be isolated from the pressure source for the remaining portion of the test period.

[Amdt 25/1]